Test report issued under the responsibility of:
EMITECH MONTPELLIER laboratory
MRA US-EU Designation Number: FR0006
IC Assigned Code: FR0003

RF EXPOSURE TEST REPORT

KDB 447498 D01 V06
RSS-102 - Issue 5, March 2015

Company .....:	**JRI**
Address.....:	16 RUE LOUIS RAMEAU 95870 BEZONS FRANCE
Test item description. .....:	**Product for acquisition, monitoring and transmission of high-precision physical measurements**
Trade Mark. .....:	JRI
Manufacturer.....:	JRI
Model/Type reference.....:	06518000 / NovaSPY
FCC ID.....:	W4513756
IC. .....:	25800-13756
Ratings.....:	3.2 Vdc to 3.6 Vdc
Testing Laboratory .....:	**EMITECH MONTPELLIER laboratory**
Address.....:	145 RUE DU MASSACAN 34740 VENDARGUES FRANCE
Report Reference No.....:	**RR-EVE-24A183-2A**
Test procedure. .....:	CE Marking
Diffusion.....:	GUILLAUME GAUTHIER
Applicant's name. .....:	JRI
Date of issue.....:	September 10, 2024
Total number of pages.....:	10
Revision. .....:	0
Compiled by.....:	Morgan PATEY
Approved by (+ signature). .....:	David MONTAULON (Technical manager)

Duplication of this test report is only permitted for an integral photographic facsimile. It includes the number of pages referenced here above. This document is the result of testing a specimen or a sample of the product submitted. It does not imply an assessment of the conformity of the whole manufactured products of the tested sample.

REPORT INDEX:

1. GENERAL INFORMATIONS 3
2. REFERENCE DOCUMENT(S) 4
3. EQUIPMENT TECHNICAL DESCRIPTION 5
3.1. TEST CONDITIONS 5
3.2. E.U.T. MARKING PLATE 5
3.3. E.U.T. GENERAL VIEW 6
3.4. E.U.T. INTERNAL VIEW & ELECTRONIC BOARD 7
3.5. E.U.T. MECHANICAL AND ELECTRICAL DESIGN 8
3.6. E.U.T. INPUT/OUTPUT PORTS 8
3.7. EUT RADIO SPECIFICATIONS 9
4. RF EXPOSURE 10

REVISION HISTORY:

Revision	Date	Modified pages	Modifications
0	September 10, 2024	/	Creation

1. GENERAL INFORMATIONS

This document submits the results of RF exposure evaluation on the equipment **Connected measuring device NovaSPY** (denominated hereafter E.U.T.: equipment under test) according to document(s) listed in §2 of this test report.

TESTING PROCEDURE AND TESTING LOCATION:	
Testing Location ..... :	EMITECH MONTPELLIER laboratory
Address. ..... :	145 RUE DU MASSACAN 34740 VENDARGUES FRANCE
Test procedure. ..... :	FCC IC Certification
Tested by ..... :	Morgan PATEY
Test supervisor ..... :	None
Date of receipt of test item ..... :	N/A
Date (s) of performance of tests ..... :	From February the 27th to the 28th of 2024
APPLICANT'S GENERAL INFORMATIONS:	
Company name ..... :	JRI
Company address. ..... :	16 RUE LOUIS RAMEAU 95870 BEZONS FRANCE
Person(s) present during the tests. ..... :	Mr GAUTHIER
Responsible. ..... :	GUILLAUME GAUTHIER

GENERAL REMARKS:

The information in italics is declared by the manufacturer and is under his responsibility
The test results presented in this report relate only to the object tested.
The results contained in this report reflect the results for this particular model and serial number. It is the responsibility of the manufacturer to ensure that all production models meet the intent of the requirements detailed within this report.

"(see Enclosure #)" refers to additional information appended to the report.
"(see appended table)" refers to a table appended to the report.
Throughout this report the decimal separator is point.

POSSIBLE TEST CASE VERDICTS:	
Test case does not apply to the test object.:	N/A
Test case not performed..... :	N/P
Test object does meet the requirement..... :	P (Pass)
Test object does not meet the requirement. ..... :	F (Fail)

DEFINITIONS AND ABBREVIATIONS:

E.U.T.	Equipment Under Test	AE	Ancillary Equipment	Pk	Peak detector
RBW	Resolution BandWidth	VBW	Video BandWidth	QP	Quasi-peak detector
FSOATS	Free Space Open Area Test Site	FAR	Full Anechoic Room	Av	Average detector
VP	Vertical Polarization	HP	Horizontal Polarization	RMS	Root Mean Square
RF	Radio Frequency	N.T.R	Nothing To Report	N/C	Not Communicated
SAC	Semi Anechoic Chamber				

2. REFERENCE DOCUMENT(S)

NORMATIVE REFERENCES:
The following referenced documents are necessary for the application of the present test report. **FCC 47 CFR PART 15** Code of federal regulations – Title 47 telecommunication Part 15- Radio frequency devices **KDB 447498 D01 v06** RF exposure procedures and equipment authorization policies for mobile and portable devices. **RSS-102 - Issue 5, March 2018** Radio Frequency (RF) Exposure Compliance of Radiocommunication Apparatus (All Frequency Bands) **RR-EVE-24A183-1A** Radio Test Report Emitech. Although the product standard uses obsolete technical standards, the latest versions of standards achievable by the laboratory will be used for testing.
INFORMATIVE REFERENCES:
The following referenced documents are not necessary for the application of the present test report but they assist the user with regard to a particular subject area.

3. EQUIPMENT TECHNICAL DESCRIPTION

3.1. Test Conditions

Test item description. ..... :	Product for acquisition, monitoring and transmission of high-precision physical measurements
Model/Type reference..... :	06518000 / NovaSPY
Trade Mark. ..... :	JRI
Serial number (S/N)..... :	PT2320230001
Part number (P/N). ..... :	Not communicated
Software version..... :	*N/A*
Firmware version. ..... :	*1.0.0*
Type of sample..... :	Pre-serial
Function(s)..... :	Measurement and 2.4 GHz data transmission to LINK concentrator in order to send it tp cloud plateform
Manufacturer name. ..... :	JRI
Address. ..... :	16 RUE LOUIS RAMEAU 95870 BEZONS FRANCE

General product information:

N/A

3.2. E.U.T. Marking plate

EUT did not have a marking plate during tests

3.3. E.U.T. General view

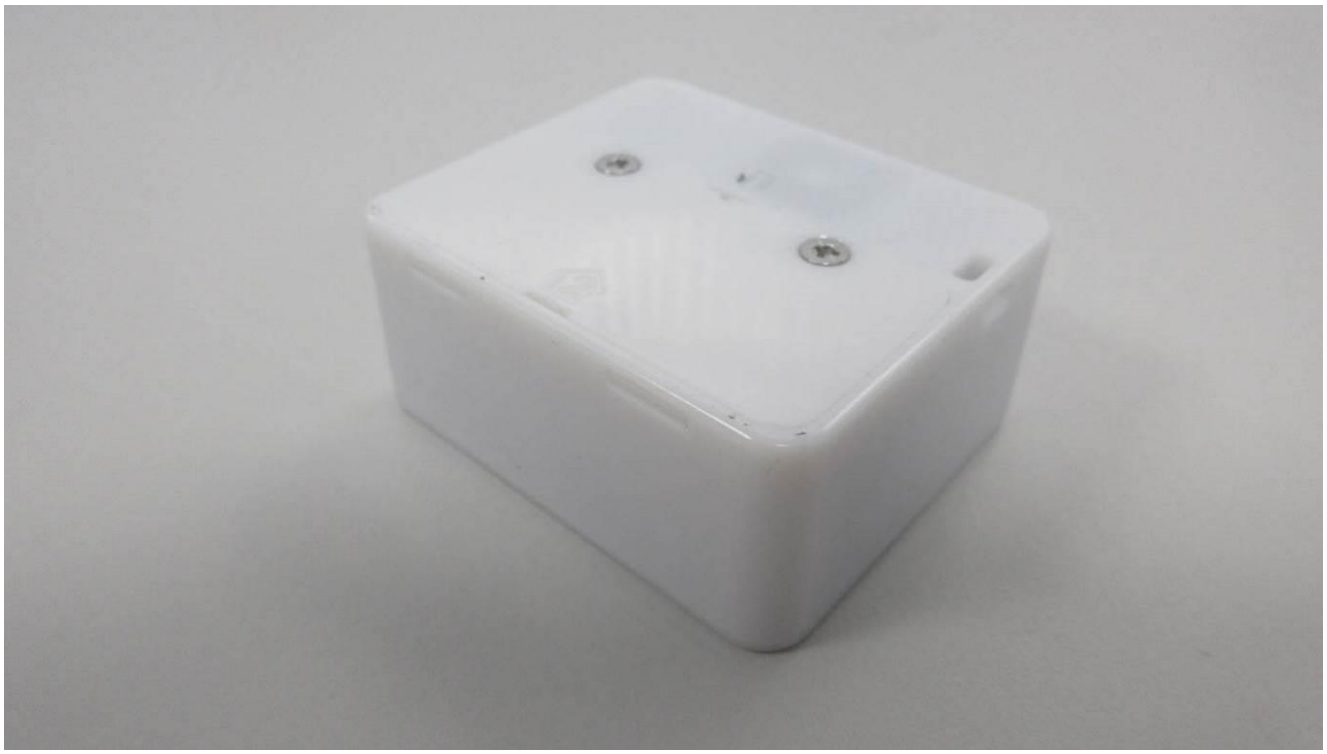

3.4. E.U.T. Internal view & Electronic board

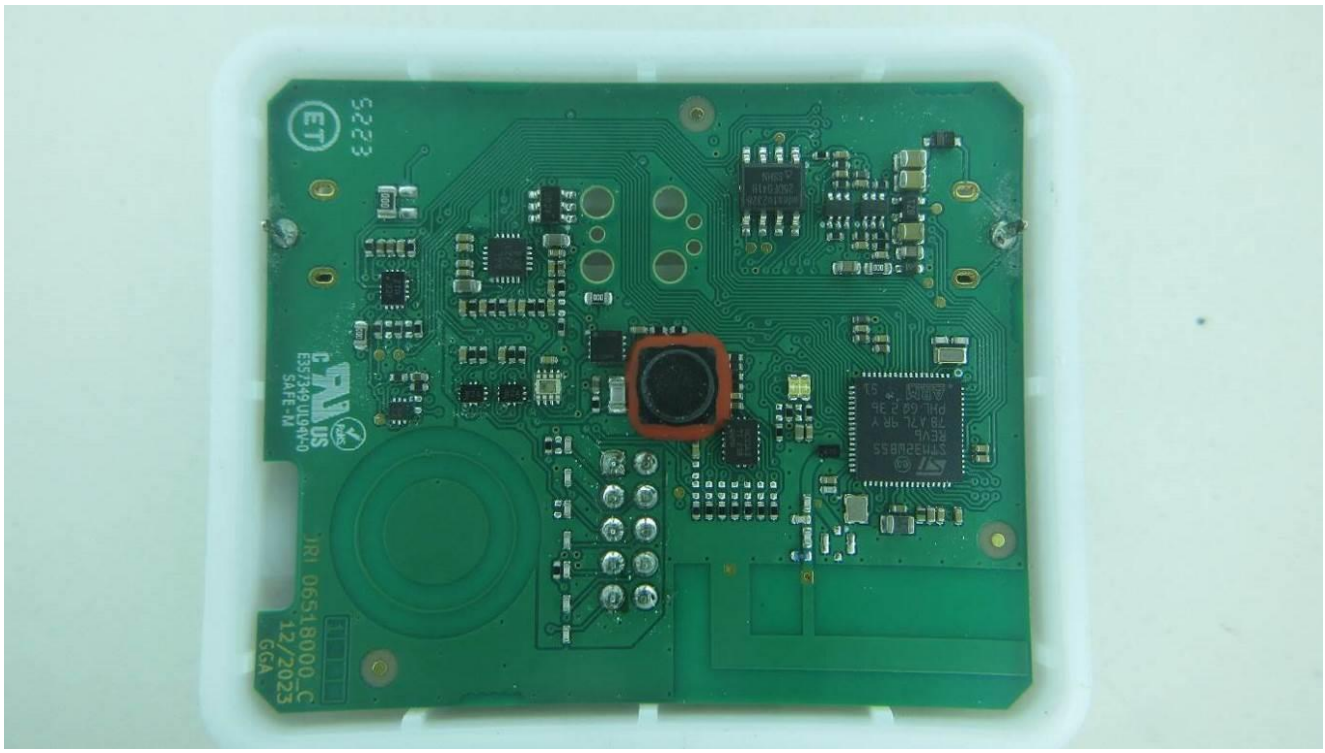

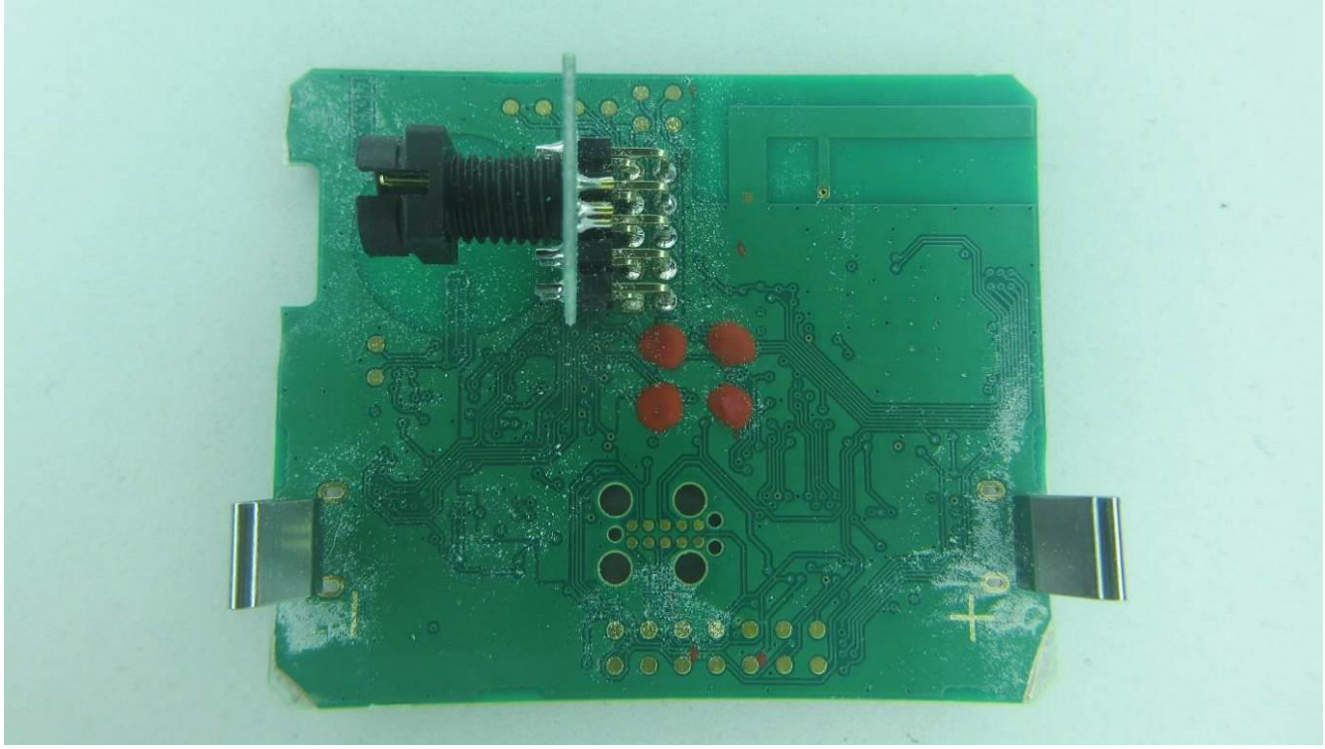

3.5. E.U.T. Mechanical and Electrical Design

Power supply. ..... :	*3.6 Vdc*
Power supply range. ..... :	*3.2 Vdc to 3.6 Vdc*
Power type. ..... :	*Battery powered*
Power ..... :	*0.3 mW (average), 300 mW (maximum)*
Nominal current ..... :	*80 µA (average), 80 mA (maximum)*
Dimensions (L x W x H) (mm). ..... :	*64 x 54 x 28*
Weight (kg). ..... :	*0.080*
Temperature range (°C). ..... :	*-40 to +80*
Ground bounding strap. ..... :	*No*

Comments:

N/A

3.6. E.U.T. Input/Output ports

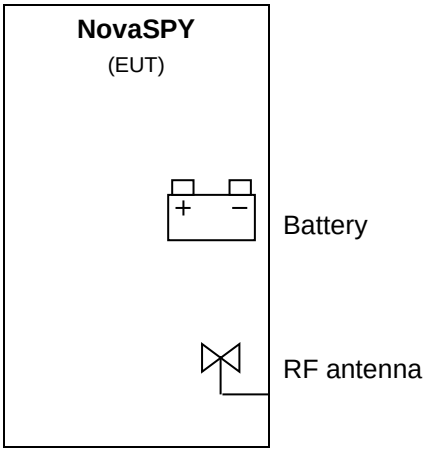

PORT	NAME	TYPE	LENGTH	CABLE TYPE	COMMENTS
0	Main frame	N/E	N/A	Plastic	N/A
1	Battery	DC	N/A	N/A	3.6 Vdc
2	RF antenna	RF	N/A	N/A	2480 MHz

AC/DC :	AC/DC Converter port	AC ..... :	Alternative current port	DC ..... :	Direct current port
I/O .....:	Input or Output port	TP ..... :	Telecommunication port	RF ..... :	Radio frequency port
N/E .....:	Non Electrical port				

3.7. EUT Radio Specifications

a) GENERAL INFORMATIONS	
According to manufacturer's declarations :	
EUT type..... :	*Transceiver*
Technology..... :	*LP WPAN*
Environmental profile..... :	*Data transmissions*
Temperature range..... :	*-40°C to +80°C*
Antenna type ..... :	*Integrated*
Antenna Gain..... :	*Not communicated*
Comments:	
N/A	

b) TRANSMITTER PARAMETERS (TX)	
Frequency bands..... :	*2400 MHz to 2483.5 MHz*
RF Power..... :	*Not communicated*
Modulation type ..... :	*OQPSK*
Adaptative equipment..... :	*No*
Nominal channel bandwidth ..... :	*2 MHz*
Duty cycle ..... :	*Not communicated*
Number of channels / Separation..... :	*1*
Tested frequency..... :	*2480 MHz*

c) RECEIVER PARAMETERS (RX)	
Frequency bands..... :	*2400 MHz to 2483.5 MHz*
Category/Class ..... :	*Not communicated*
Bandwidth..... :	*Not communicated*

4. RF EXPOSURE

Maximum EIRP = 4.98 dBm (3.15 mW) at 2480 MHz (see Radio test report referenced in §2)

For USA

In accordance with KDB 447498 D01 General RF Exposure Guidance v06 Appendix A, as EIRP is lower than 9.94 mW at 2480 MHz, SAR exemption for FCC can be considered for a distance ≤ 5cm.

It is therefore not necessary to carry out measurements to assess human exposure to radiofrequencies.

For Canada

In accordance with RSS-102, Issue 5, Section 2.5.1., as EIRP is lower than 3.94 mW at 2480 MHz, SAR exemption for ISED can be considered for a distance ≤ 5mm.

It is therefore not necessary to carry out measurements to assess human exposure to radiofrequencies.

End of test report