Trigno™ Wireless Biofeedback System

User's Guide

PM-W01

Copyright © 2017 by Delsys Incorporated

MAN-031-0-1

Important Information **7**
Intended Use 7
Contraindications 7
Technical Service and Support 7
Warnings and Precautions 8
Device Information 8
PC Requirements 10
Trigno System Overview **11**
System Components 11
Trigno Avanti™ Sensor Features 11
Onboard EMG Sensor 12
Inertial Measurement Unit 12
Data Synchronization 12
Wireless Communication 12
Rechargeable Battery 12
Sealed Enclosure 12
Internal Magnetic Switch 12
Sensor LED Feedback States 13
Base Station Features 14
Base Station LED Feedback States 14
Getting Started with the Trigno System **15**
Software Installation 15
Powering the Base Station 15
Charging the Sensors 15
Turning the Sensor ON 16
Turning the Sensors OFF 17
Pairing the Sensors with the Base Station 17
Acquiring Data with the System 18
Configuring the Trigno Sensors 18
Using the Wireless EMG Sensors **19**
Orienting the EMG Sensors on the Skin 19
Cleaning the Sensor Site 19
Applying the Trigno Adhesive Skin Interfaces 19
Using the Analog Outputs **21**
Analog Output Connectors 21
Channels 1-16, EMG Signals 21
Channels 1-64, all Signals 21
Configuration Options for Trigno System **23**
Trigno System Information 23
Transmission Frequencies 23
Firmware Version 23
Serial Number 23
Network Size 23
Launch Test Panel 23
Trigno System Settings 24
Frequency Set 24
Audible Warnings 24

Maintenance and Care **25**
Trigno Sensors 25
Trigno Base Station 25
Specifications **26**
Appendix I **27**
Mains Isolation 27

Important Information

Intended Use

The Trigno™ Wireless Biofeedback System is a battery-powered biofeedback device that enables researchers and clinicians to acquire EMG and related signals from subjects for biofeedback and research purposes. They are intended for relaxation training and muscle reeducation. Interpretation of the EMG and supporting signals by a qualified individual is required.

Rx ONLY

Contraindications

DO NOT USE on Patients with implanted electronic devices of any kind, including cardiac pace-makers or similar assistive devices, electronic infusion pumps, and implanted stimulators.

DO NOT USE on irritated skin or open wounds.

DO NOT USE on Patients with allergies to Silver.

DO NOT USE in critical care applications.

Technical Service and Support

For information and assistance visit our web site at: www.delsys.com

Contact us at:

E-mail: support@delsys.com

Telephone: (508) 545 8200

Warnings and Precautions

Consult all accompanying documents for precautionary statements and other important information.

Consult accompanying user's guide for detailed instructions.

Keep the device dry. The ingress of liquids into the device may compromise the safety features of the device.

Handle with care.

Sensitive electronic device. Avoid static discharges. Do not operate or store near strong electrostatic, electromagnetic, magnetic or radioactive fields. Interference from external sources may decrease the signal-to-noise ratio or result in corrupted data.

Connect only to Delsys-approved devices.

Connecting a patient to high-frequency surgical equipment while using Delsys EMG systems may result in burns at the site of the EMG sensor contacts

Immediately discontinue device use if skin irritation or discomfort occurs.

Immediately discontinue device use if a change in the device's performance is noted. Contact Delsys technical support for assistance.

Delsys Inc. guarantees the safety, reliability, and performance of the equipment only if assembly, modifications and repairs are carried out by authorized technicians; the electrical installation complies with the appropriate requirements; and the equipment is used in accordance with the instructions for use.

Device contains a Lithium-Polymer battery. Do not damage, crush, burn, freeze or otherwise mishandle the device. Recharge only with the approved power supply and recharger.

Trigno Systems should be stored and operated between 5 and 50 degrees Celsius due to the presence of an internal Lithium Polymer rechargeable cell. Storing or operating the device, and consequently the cell, outside of this temperature range may compromise the integrity and the safety features of the cell.

Device Information

Complies with Requirements put forth by the Medical Device Directive 93/42/EEC. Class I device, Annex VII. Type BF device (IEC 60601-1)

Isolated device, (Class II, IEC 60601-1)

Type BF Equipment.

Date of Manufacturing (appears on device)

SN

Serial Number (appears on device)

Dispose the device according to local rules for electronic waste.

Authorized Representative:
EC REP
EMERGO EUROPE
Prinsessegracht 20, 2514 AP The Hague
The Netherlands
FCC ID: W4P-SP-W02 (Trigno Base Station)
FCC ID: W4P-SP-W06 (Trigno “Avanti” Sensor)
IC: 8138A-DST03 (Model: Trigno Wireless Biofeedback System)

This device complies with Part 15 of the FCC Rules and Industry Canada’s RSS-210 License Exempt Standards. Operation is subject to the following two conditions: (1) This device may not cause harmful interference. and (2) this device must accept any interference received, including interference that may cause undesired operation.

This Class B digital apparatus complies with Canadian ICES-003.

Cet appareil est conforme à des règlements d'Industrie Canada exempts de licence standard RSS (s). Son fonctionnement est soumis aux deux conditions suivantes: (1) Ce dispositif ne doit pas causer d'interférences nuisibles, et (2) cet appareil doit accepter toute interférence reçue, y compris les interférences pouvant entraîner un fonctionnement indésirable.

Cet appareil numériqué de la classe B est conformé à la norme NMB-003 du Canada

This product complies with FCC OET Bulletin 65 radiation exposure limits set forth for an uncontrolled environment.

To reduce potential radio interference to other users, the antenna type and its gain should be so chosen that the equivalent isotropically radiated power (EIRP) is not more than that required for successful communication.

This equipment has been tested and found to comply with the limits for a Class B digital device, pursuant to Part 15 of the FCC Rules. These limits are designed to provide reasonable protection against harmful interference in a residential installation. This equipment generates, uses, and can radiate radio frequency energy and, if not installed and used in accordance with the instructions, may cause harmful interference to radio communications. There is no guarantee that interference will not occur in a particular installation. If this equipment does cause harmful interference to radio or television reception, which can be determined by turning the equipment off and on, the user is encouraged to try to correct the interference by one or more of the following measures: Reorient or relocate the receiving

antenna; increase the separation between the equipment and receiver; Connect the equipment into outlet on a separate circuit.

Pursuant to FCC 15.21 of the FCC rules, changes not expressly approved by Delsys Inc. could void the User's authority to operate the equipment.

PC Requirements

- EMGworks 4.3 or later
- Windows 7, 8.1, 10
- One USB 2.0 port
- At least 2.0 GHz processor clock speed
- At least 2 GB system memory
- 1280x1024 (SXGA) display resolution or better
- 50 GB hard disk storage (minimum)

Trigno System Overview

The Trigno™ Wireless Biofeedback System is a device designed to make EMG (electromyographic) and biofeedback signal detection reliable and easy. The system transmits signals from the Trigno Avanti™ sensors to a receiving base station using a time-synchronized wireless protocol which minimizes data latency across sensors. The core architecture of the Trigno System is designed to support high fidelity EMG signals, along with complementary biofeedback signals such as movement data, force signals, contact pressure events and timing and triggering information. The system is also capable of integrating with 3rd party lab equipment through a variety of interfaces which include analog signal generation, triggering scenarios and digital integration through the Trigno SDK (Software Development Kit) and the Trigno API (Application Program Interface). Refer to the specific component senor User Guides for operational details of these system elements.

System Components

1) Trigno Avanti™ Wireless Sensors
2) Trigno Base Station
3) Power Supply
4) Personal Computer
5) Adhesive Skin Interfaces
6) USB Cable

Trigno Avanti™ Sensor Features

Each Trigno Avanti™ Sensor is equipped with the following capabilities and design features:

- on board configurable precision EMG sensor
- built-in 9-axis inertial measurement unit (IMU)
- inter-sensor latency < 1 sample period
- wireless transmission range 20+m[1]
- self-contained rechargeable battery
- battery charge monitoring and status indicator
- software selectable operational modes
- environmentally sealed enclosure
- low power mode
- auto shutoff
- internal magnetic switch
- LED User Feedback

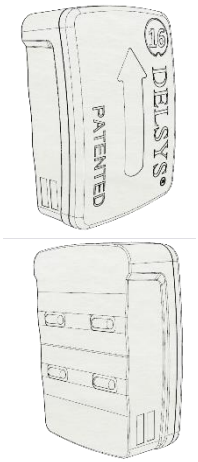

[1] *communication distance is dependent on the RF operating environment.*

Onboard EMG Sensor

Trigno Avanti™ sensors support a low noise, high fidelity sensing circuit for detecting EMG (electromyographic) biofeedback signals from the surface of the skin when muscles contract. The sensor bandwidth can be selected between 10-850Hz or 20-450 Hz and the input range of the sensor can be selected between 22mV or 11mV depending on user needs.

Inertial Measurement Unit

Trigno Avanti™ Sensors have a built-in 9 DOF inertial measurement unit which can relay acceleration, rotation and earth magnetic field (compass) information. Users can use this information to discern movement activity time-synchronized with the EMG signals. One of 4 ranges can be selected for each sensor to span ±2g to ±16g for accelerometer outputs and ±250°/s to ±2000°/s for gyroscope outputs.

Data Synchronization

Data from each sensor and from each channel within a sensor are time synchronized over the Trigno wireless communication protocol so no time skew between data exists. A maximum of 16 sensors can stream data to a host base station at one time.

Wireless Communication

The Trigno wireless communication scheme offers robust data transmission for up to 16 sensors with a nominal distance of 20m. Under optimal environmental conditions (no RF path obstructions or interfering sources), this nominal distance can be notably superseded. The Trigno communication protocol is robust to sharing RF space with common 2.4 GHz devices such as routers, smart phones and WiFi devices.

Rechargeable Battery

Sensors contain a sealed rechargeable lithium polymer battery for multiple hours of continuous use which can be extended when making use of low power modes. Actual duration will depend on usage conditions. Charge status is conveniently reported through the wireless communication.

Sealed Enclosure

The environmentally sealed enclosure protects the electronics from the ingress of liquids and other environmental elements, and provides a high standard of user safety and durability.

Internal Magnetic Switch

The Trigno Avanti sensors are equipped with an internal magnetic switch which is used to perform RF pairing operations and can be used to the turn the sensors off. To activate the internal magnetic switch, the sensor must be placed on the magnet label located on the Base Station charging cradle. The internal magnetic switch will only react when the software is performing an RF pairing operation,

or if it is exercised within 3 seconds of pulling a sensor out of a charging pocket. Exposure to any magnetic fields outside of these 2 qualifying conditions will be ignored by the sensor. The internal magnetic switch is a feature which removes the need for a mechanical button resulting in improvements to sensor durability and performance.

Sensor LED Feedback States

Trigno Avanti sensors indicate their status through various LED Arrow colors and blink patterns as indicated in the table below. Each of these states is described in subsequent sections of this User Guide.

	State	Color	Pattern	Arrow Display
1	Power Off	Off	none	
2	Charging	Amber	solid	
3	Charge Complete	Green	solid	
4	Identification Mode	White	rapid flash	
5	Scan	Amber/Cyan	slow flash	
6	Low Power Scan	Amber/Cyan	occasional flash	
7	Data Collection	Green	slow flash	
8	Configuration Change	Green	rapid flash (3x)	
9	Pairing	Amber	solid	
10	Pairing Success	Green	rapid flash (≥6x)	
11	Pairing Fail	Red	double flash(≥3x)	

1) **Power Off**: No LED arrow activity is present when the sensor is off.
2) **Charging**: Sensor Charging in the Trigno Base Station is denoted by continuous amber LED arrow illumination
3) **Charge Complete**: Once the internal sensor battery has been full recharged, the LED arrow illuminates to continuous green.
4) **Identification Mode**: The arrowed blinks whites upon this software command so that it can be easily identified and located.
5) **Scan**: upon power up the sensor actively searches for a host to connect to.
6) **Low Power Scan**: If no host is found after 5 minutes in the active scan mode, the sensor decreases it's scan rate to conserve battery charge.
7) **Data Collection**: Sensor is sampling and streaming data to host.
8) **Configuration Change**: Sensor acknowledges change in configuration sensor from host.
9) **Pairing**: Sensor is performing a pair operation with the host.
10) **Pairing Success**: sensor successfully completes pair operation with host.
11) **Pairing Fail**: pair operation did not complete successfully with host.

Base Station Features

Each Base Station is equipped with the following features:

- recharging cradle for 16 sensors
- high speed USB communication with PC
- 64-channel analog outputs
- ± 5V analog output range
- detachable antenna
- full trigger capability (Start/Stop, Input/Output)
- communication & power feedback LEDs
- convenient carry case design
- Medical Grade Universal Power Supply.

Recharging Cradle: The Trigno Base Station is equipped with 16 charge pockets which can accommodate Trigno sensors for charging. The pockets are keyed so that sensors can only be inserted in one orientation.

Medical Power Supply: The system includes a universal 12V medical grade power supply for operating the base station. International plug adapters are included for connection to local mains power requirements.

USB Communication: The Base Station compiles data received from the active wireless sensors and transfers it over a USB 2.0 compliant connection to a Windows PC.

Analog Outputs: The Base Station is equipped with two 68-poisition analog output connectors that can be used to interface with analog data acquisition systems. Biofeedback signals acquired by the wireless sensors are made available as analog signals spanning a ±5V range.

Trigger Capability: The Base Station is equipped with a trigger port that can be used to synchronize the starting and stopping data streams with 3rd party equipment. The Trigger Module is required for making device connections.

Base Station LED Feedback States

Trigno Base Stations are equipped with 2 LEDs, indicating power on/off and communication function as described in the table below:

	State	Color	Pattern	Arrow Display
1	Power Off	Off	none	● ●
2	Standby	Green	solid	● ●
3	Data Streaming	Green	flashing	● ● / ● ●
4	Mode Change	Green	3x flash	● ● / ● ● ● ● / ● ● ● ● / ● ●
5	Communication Error	Green	double flash	● ● / ● ●

Getting Started with the Trigno System

Software Installation

The Trigno EMG system is controlled by a PC through the USB port, and thus requires software. Trigno Systems include a Delsys Software DVD containing EMGworks Signal Acquisition and Analysis Software for interacting with the system

Install EMGworks from the Delsys Software DVD or from www.delsys.com prior to connecting the Trigno Base Station to the computer.

Powering the Base Station

Trigno Systems are equipped with a universal medical power supply and are provided with interchangeable country-specific plug adapters. Connect the Trigno power supply to the circular DC jack located on the side of the Base Station. Energize the power supply by connecting it to a Mains outlet or to an isolation transformer. The power LED on the Base Station will illuminate anytime power is applied.

Trigno System are specifically designed and approved to function only with the Power Supply provided. Power Supply substitutions constitute a violation of the medical safety approvals and will void the warranty.

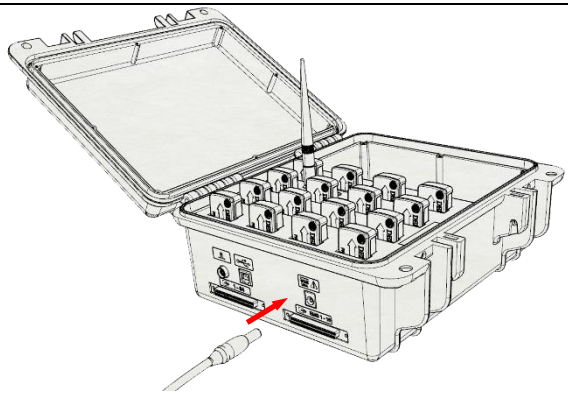

Figure 1: Connecting the SC-P05 power supply to the Base Station.

Charging the Sensors

All sensors are fitted with a sealed lithium polymer cell and are charged with the provided base station powered from a universal medical grade power supply. A full charge will generally require 3 hours or less to complete, depending on the battery age, usage history and particular charge conditions. The sensor arrow will glow amber during charging and illuminate green upon charge completion. It is recommended to keep sensors docked and charging

even when not in use in order to maximize battery life, as sensor batteries will self-discharge with time and will degrade if left uncharged for extended periods of time.

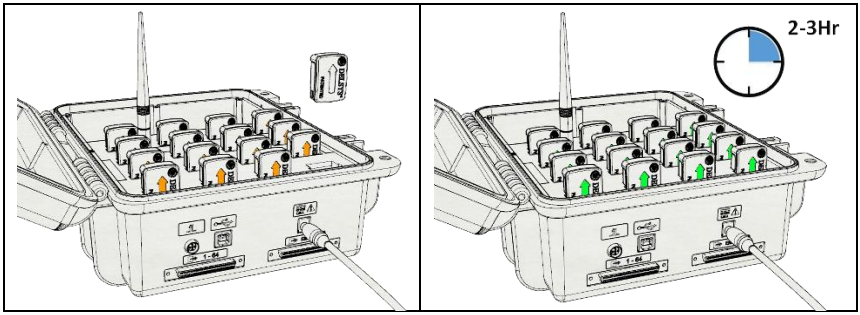

Figure 2: Docking a sensor in the charge cradle (left). When docked, sensors will turn off and begin battery charging indicated by an amber LED indicator. Once fully charged, the sensor LED indicator shows green (right).

Battery Performance

Battery performance and longevity is subject to a myriad of factors, which include charge/discharge conditions, usage scenarios, number of charge/discharge cycles, environmental temperature factors, and cell manufacturing parameters which are subject to statistical variations. Typical industry expectations assume an 80% charge capacity derating after 2-years or 300 charge/discharge cycles. Sensors are equipped with battery charge monitoring and automatic sensor turn off when charge is depleted to avoid deep discharge scenarios. Storage at temperature outside the 5-40°C may damage the battery.

Turning the Sensor ON

Trigno Avanti sensors are automatically turned on when they are removed from a powered charging dock. The sensors must be docked for a minimum of 3 seconds in the charge cradle in order for the self-powering scheme to activate upon undocking.

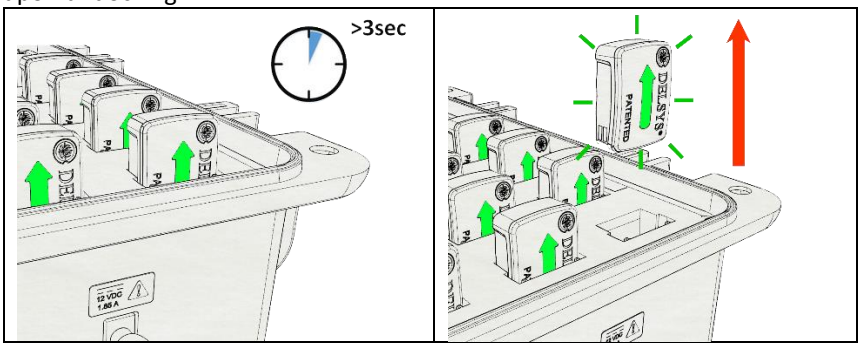

Figure 3: Ensure sensors are docked and charging for a minimum of 3 seconds and then removed from the charge cradle to turn on.

Turning the Sensors OFF

There are 4 mechanisms that will turn the sensors off:

a) Dock Sensors in Charger: docking the sensors in the charge cradle will automatically turn the wireless communication system of the sensor off and engage the battery charging circuit.

b) Undock and Activate Magnetic Switch: Sensors can be turned off by activating the internal magnetic switch within 3 seconds of undocking a sensor from an active charge pocket.

c) Dock and Undock Sensors <3s: Docking and undocking the sensors in less than 3 seconds will turn the sensors off. Plugging and unplugging the power connector within 3 seconds will turn off all docked sensors.

d) Software Issued Command: Sensors that are paired with the base station and are communicating with the host software application can be turned off by way of an "off" command sent from the software application. Please refer to the software user guide for more information.

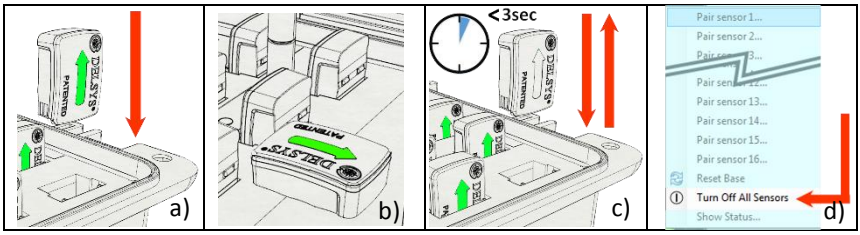

Pairing the Sensors with the Base Station

Data acquisition functions of the sensor, wireless transmission to the base station and data transfer from the base station to the software require the sensors to be paired to the base station. The pairing process links the unique ID of the sensor to the unique ID of the base station to establish a wireless data link. Pairing information is retained after the base station and sensors are powered off. Pairing is initiated through the software pairing command and completed by activating the internal magnetic switch in the sensor. The magnetic switch in the sensor is activated by tapping the sensor over the built-in magnet of the base station.

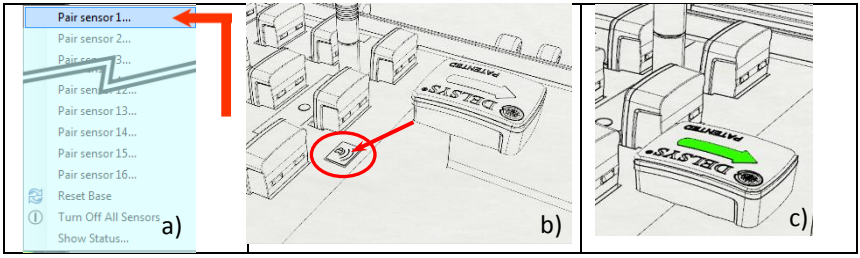

Acquiring Data with the System

Refer to the software user guide and help information for detailed explanation of software functions. Data collection and sensors configuration is initiated through the software.

Configuring the Trigno Sensors

Once paired to the system, EMG data and IMU data from sensor can be configured in the following ways:

Electromyographic (EMG) Sensing Ranges							
Input Range	11 mV		or	22 mV			
Bandwidth	20-450 Hz		or	10-850 Hz			
Inertial Measurement Unit (IMU) Ranges							
Accelerometer	±2 *g*	or	±4 *g*	or	±8 *g*	or	±16 *g*
Gyroscope	±250 *dps*	or	±500 *dps*	or	±1000 *dps*	or	±2000 *dps*

Note that the magnetometer has a fixed range of ±4900uT.

Using the Wireless EMG Sensors

Orienting the EMG Sensors on the Skin

Trigno EMG Sensors employ 4 silver bar contacts for detecting the EMG signal at the skin surface. For maximum signal amplitude, it is important to orient these bars perpendicular to the muscle fiber direction. The top of the sensor is shaped with an arrow to aid in the determination of this orientation. The arrow should be placed parallel to the muscle fibers underneath the sensor. The sensor should also be placed in the center of the muscle belly away from tendons and the edge of the muscle. The sensor is easily attached to the skin using the Delsys Adhesive Sensor Interface.

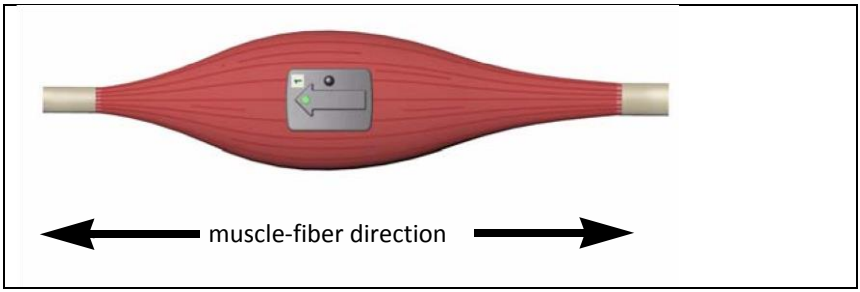

Figure 6. EMG Sensors must be properly oriented with the muscle fibers. Align the sensor's arrow with the direction of the underlying muscle fibers.

Cleaning the Sensor Site

Prior to affixing the EMG sensor on the surface of the skin, the sensor site must be properly cleaned to remove dry dermis and any skin oils. Wiping the skin prior to sensor application helps ensure a high quality signal. If excessive hair is present, it will also be necessary to shave the site. In cases where the skin is excessively dry, it may be useful to dislodge dry skin cells by dabbing the site with medical tape. The dry cells will attach the tape's adhesive when it is removed. Be sure to wipe with isopropyl alcohol to remove any adhesive residue that may remain.

Applying the Trigno Adhesive Skin Interfaces

Trigno System are supplied with specially-designed adhesive interfaces to simplify sensor attachment. These hypo-allergenic interfaces are manufactured from medical grade adhesive approved for dermatological applications. Usage of the interface promotes a high quality electrical connection between the sensor bars and the skin, minimizing motion artifacts and the ill-effects of line interference. To ensure a strong bond with the skin, it is advised to remove excessive hair and wipe the skin area and the EMG Sensor with isopropyl

alcohol to remove oils and surface residues. Allow the skin to dry completely before applying the interfaces.

Adhesive Sensor Interfaces are for single use only.

Immediately discontinue use if skin irritation or discomfort occurs. All Adhesive Sensor Interfaces and Reference Electrodes are for single use only. Discard after using. Reseal storage bag to maintain freshness.

Do not use on Patients with allergies to silver.

Do not apply over open wounds or irritated skin.

Using the Analog Outputs

The Trigno System provides simultaneous analog signal reconstruction of data being detected by all active sensors. These signals are made available on the 68-pin connectors located on the Base Station and range cover the +/-5V range .

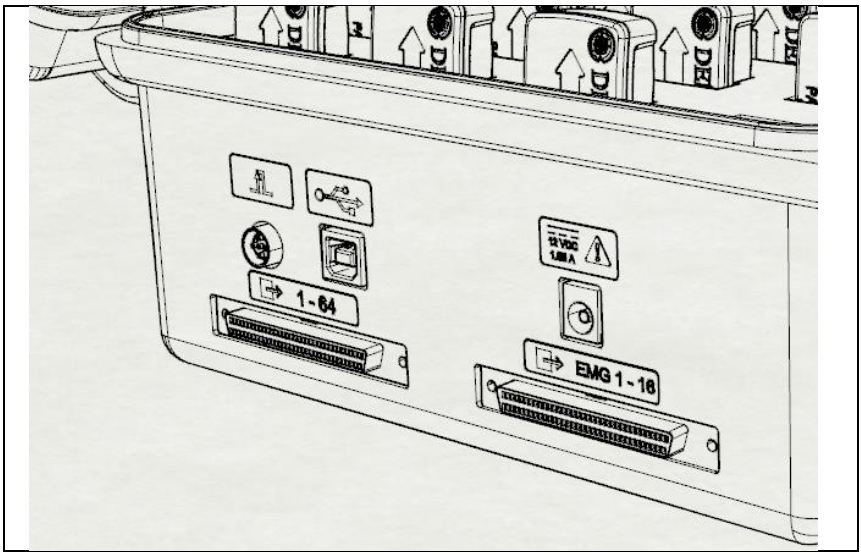

Figure 4: Analog Output Connectors on Base Station.

Analog Output Connectors

Channels 1-16, EMG Signals

The pinout of this connector replicates the pinout of the Bagnoli desktop EMG systems to facilitate connectivity between shared equipment for the Channels 1-16. This connector is a 1.27mm, PCS series connector and is compatible National Instruments data acquisition modules.

Channels 1-64, all Signals

This connector makes available all 64 analog output channels in the 68-pin connector. This connector is a 1.27mm, PCS series connector and is compatible National Instruments data acquisition modules.

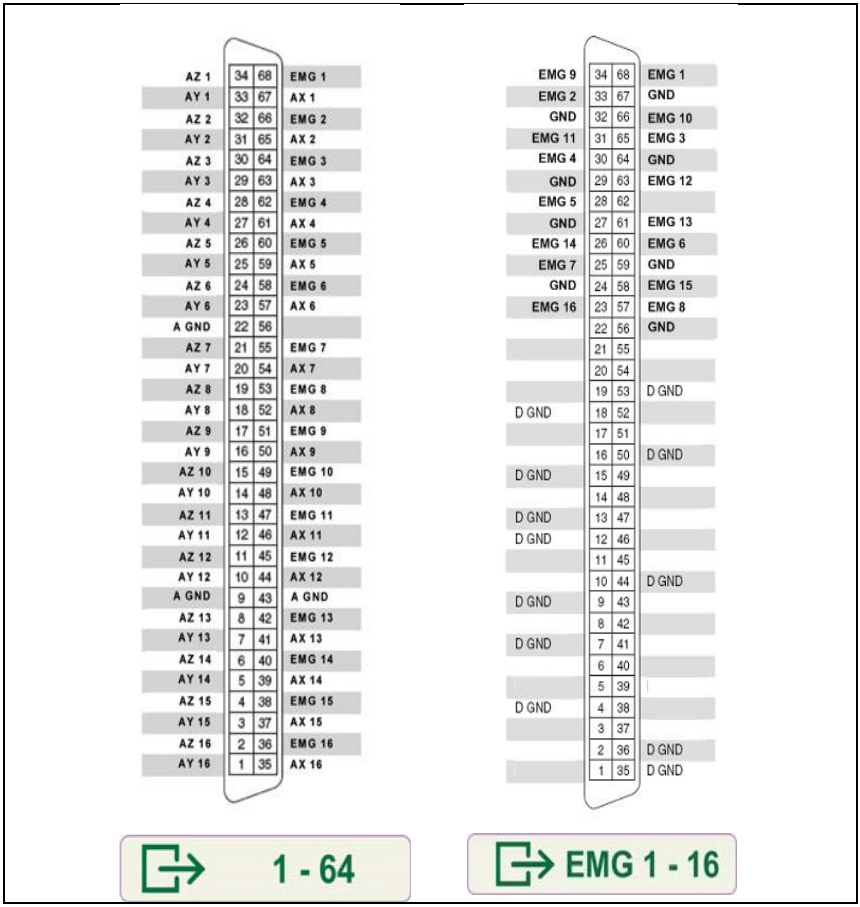

Figure 5: Pinouts of the analog output connectors

Configuration Options for Trigno System

Trigno System Information

The Information tab presents information pertaining to the system and its settings.

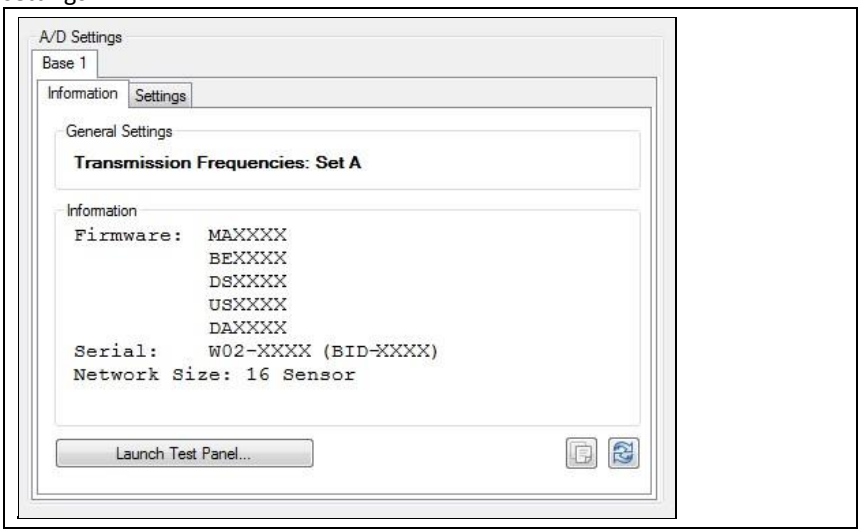

Figure 6: Trigno System panel.

Transmission Frequencies

Wireless communication occurs on varieties of frequencies throughout the acceptable 2.4 GHz spectrum. Four frequency sets are available (“A”, “B”, “C” and “D”) and are displayed in this field.

Firmware Version

The current firmware version is shown in this field.

Serial Number

Each Trigno Base Station has a unique serial number and identifier address which is shown in this field.

Network Size

This field indicates the number of sensors supported by this base.

Launch Test Panel

Places the Trigno Base Station in a test mode to assist with verification of analog output signal connections. Each of the 64 analog output channels is configured to produce a unique sinusoid which can be verified by properly sampling these channels with secondary acquisition system.

Trigno System Settings

The Settings tab allows several system parameters to be modified as needed.

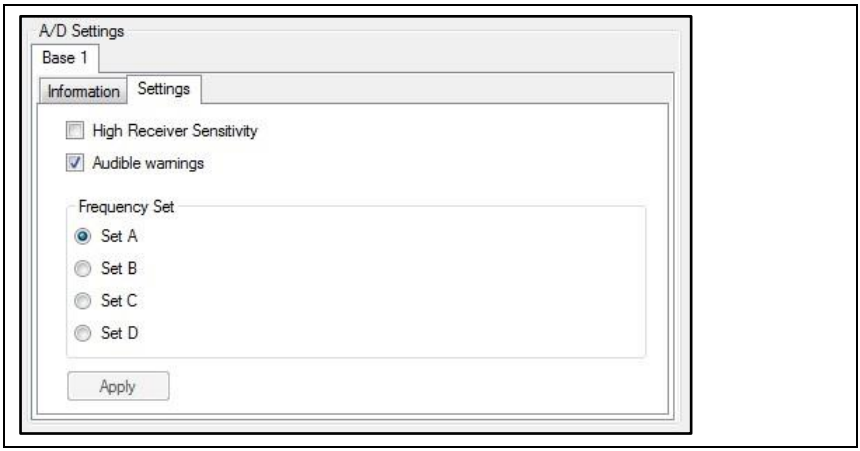

Figure 7: Trigno System Settings panel.

Frequency Set

Use this setting to change the frequencies being used for wireless communication. The default set is "A". The frequency set should only be changed if nearby sources are interfering with Trigno communications or the particular operating environment is causing significant path loss on the current frequency set. Note that changing the communication frequency set will require sensor re-pairing. Frequencies within the sets are defined by the system and cannot be changed by the User.

Audible Warnings

This option will generate an audible "ping" along with a small message, whenever a sensor falls out of range or it's battery is excessively low.

Maintenance and Care

Trigno Sensors

Trigno sensor are encased in a sealed polycarbonate enclosure. The following points should be kept in mind when handling the sensors.

- All sensors should be visually inspected before each use to ensure that no mechanical deterioration has occurred.
- The sensors can be cleaned with isopropyl alcohol swabs. Ensure that the sensor contacts remain clean at all times for proper operation.
- While the sensors are sealed and are water-resistant, these should never be completely submerged in any liquid.
- The sensor contacts are made of pure silver and are quite soft. Care should be taken to preserve the integrity of these contacts. Do not scrape or dent these contacts.

Handle the sensors with care: do not drop them on the ground or step on them.

Do not submerge the sensors in any liquid under any circumstance.

The sensors contain sensitive electronic circuitry. Static discharges and intense magnetic fields should be avoided to prevent the risk of irreparable damage to the sensors

Trigno Base Station

The Trigno System is designed to provide years of reliable service when proper care is followed. While the Base Station enclosure is made of durable plastic, the following points should be kept in mind during its use and handling:

- The device and its accessories should be visually inspected before every use to ensure that no mechanical deterioration has occurred.
- The Base Station can be easily cleaned with isopropyl alcohol swabs if necessary. Do not expose the base station to any liquid. It is not a sealed device.
- The units are not shockproof and should not be dropped or be subjected to excessive forces or accelerations.

The recharging Base Station is not water-resistant. Under no circumstance should this unit be exposed to water or any other type of liquids.

Specifications

RF Frequency Band	2400-2483 MHz (ISM band)
Dimension	27 x 37 x 13 mm
Mass	14.7 g
Temperature Range[1]	5 - 50 degrees Celsius
EMG Signal Input Range	11mV / 22mV r.t.i.
EMG Signal Bandwidth	20-450 Hz / 10-850 Hz
EMG Contact Dimensions	5x1 mm
Contact Material[2]	99.99% silver
Accelerometer Range	±2g, ±4g, ±8g, ±16g
Gyroscope Range	±250 dps, ±500 dps. ±1000dps, ±2000dps
Magnetometer Range	±4900 uT
Inter-Sensor Delay	< 1 sample period
Intra-Channel Delay	< 1 sample period
Analog Output Range	± 5 V
Analog Output Bandwidth (Ch. 1-16)	DC-500 Hz
Analog Output Bandwidth (Ch. 17-64)	DC-50 Hz
Analog Output Group Delay (Ch. 1-16)	48 ms
Analog Output Group Delay (Ch. 17-64)	96 ms

1) *Exposure beyond these temperature limits may damage the rechargeable battery.*
2) *Sensor skin contacts are made from pure silver and should not be used if allergic reactions to silver are expected or found to occur.*

Appendix I

Mains Isolation

The Trigno Base Station is provided with Medical Grade isolated power supply which is compliant with IEC60601 series of harmonized standards for Medical Devices. However, full compliance with IEC60601-1 Basic Safety for Medical Devices requires that the PC operating the software be isolated as well. This stems from the basic requirement to have all patients electrically isolated from equipment within their reach, and since the PC running the Trigno Software is conceivably within their reach, it too must be isolated.

	Delsys does not supply isolation transformers for Personal Computers and their peripherals.
	Delsys recommends model IS1000HG manufactured by Tripp Lite (www.tripplite.com) for this task. This device is a medial grade isolation transformer capable of delivering up to 1000 W. A smaller similar version for 500W is also available (IS500HG). Similar products compliant with IEC60601-1 are acceptable.