Tobii Dynavox Indi® 7
User's Manual

tobii dynavox

User's manual Tobii Dynavox Indi® 7

Version 1.0.1
02/2018
All rights reserved.
Copyright © Tobii AB (publ)

No part of this document may be reproduced, stored in a retrieval system, or transmitted in any form, by any means (electronic, photocopying, recording, or otherwise) without the prior written permission of the publisher.

Copyright protection claimed includes all forms and matters of copyrightable material and information allowed by statutory or judicial law or hereafter granted, including without limitation, material generated from the software programs which are displayed on the screen such as screen displays, menus, etc.

The information contained in this document is proprietary to Tobii Dynavox. Any reproduction in part or whole without prior written authorization by Tobii Dynavox is prohibited.

Products that are referred to in this document may be either trademarks and/or registered trademarks of the respective owners. The publisher and the author make no claim to these trademarks.

While every precaution has been taken in the preparation of this document, the publisher and the author assume no responsibility for errors or omissions, or for damages resulting from the use of information contained in this document or from the use of programs and source code that may accompany it. In no event shall the publisher and the author be liable for any loss of profit or any other commercial damage caused or alleged to have been caused directly or indirectly by this document.

Content subject to change without notice.

Please check Tobii Dynavox web site www.TobiiDynavox.com for updated versions of this document.

Table of Contents

1 Introduction 5
1.1 Explanation of Admonitions 5
1.2 Symbols and Markings 5
1.3 Intended Use 6
1.4 Package Contents 6
1.4.1 Indi® 7 with Tobii Dynavox Communication Software 6
2 Safety 8
2.1 Avoiding Hearing Damage 8
2.2 Power Supply and Batteries 8
2.3 Temperature 9
2.4 Mounting 9
2.5 Emergency 9
2.6 Electricity 10
2.7 Child Safety 10
2.8 Software 10
2.9 Magnetic Field 10
2.10 Third Party 10
2.11 Environmental Control 10
3 Overview of the Indi® 7 11
3.1 Key Features 11
3.2 Product Layout 11
3.2.1 Ports, Sensors and Device Buttons 11
3.3 Preinstalled Software 12
4 Batteries in the Indi® 7 13
4.1 Batteries 13
4.2 Charging the Tablet 13
4.2.1 Checking Charge Level 13
4.2.2 Power LED Behavior 13
5 Using the Indi® 7 14
5.1 Starting the Device 14
5.1.1 Password Information 14
5.1.2 The Discover Tobii Dynavox app 14
5.2 Shutting Down the Indi® 7 14
5.3 Power Saving 14
5.4 Using the Cameras 14
5.5 Adjusting the Volume 15
5.6 Adjusting the Sound 15
5.7 Using the Microphones 15
5.8 Tobii Dynavox Windows Settings Utility 15
5.9 Reset the Indi® 7 16
6 Product Care 19
6.1 Temperature & Humidity 19
6.1.1 General Use - Operating temperature 19
6.1.2 Transportation and Storage 19
6.2 Cleaning 19
6.2.1 Cleaning of the Speakers 19

6.3 Placement 19
6.4 Transporting the Indi® 7 Device 19
6.5 Disposing of the Indi® 7 Device 20
Appendix A Support, Warranty, Training Resources 21
Appendix B Compliance Information 22
B1.1 For Part 15B Equipment 22
B1.2 For Portable Devices 22
Appendix C Technical Specifications 25
Appendix D Approved Accessories 27

1 Introduction

Thank you for purchasing a Indi® 7 device from Tobii Dynavox!

To ensure the optimal performance of this product, please take the time to read this manual carefully.

Indi® 7 is a Tobii Dynavox speech tablet intended for use as an augmentative communication aid, for computer access and as an environmental control unit for those with speech, language, physical, and cognitive disabilities.

1.1 Explanation of Admonitions

In this manual we use four (4) levels of admonitions as follows:

The Note symbol Is used for notifying the user of something important or of something that needs special attention.

The Caution symbol Is used to inform of something that could cause harm to, or malfunction of, the equipment.

The Warning symbol Is used to inform of something in which there is a conceivable risk of harm to the user if the Warning is ignored.

The High Volume symbol Is used to inform of something that can cause damage to hearing.

1.2 Symbols and Markings

This section provides information about the symbols that are used on the Indi® 7, its accessories, or packaging.

Symbol or Markings	Description
	Power On
	Dispose of in accordance with your country's requirements.
	CE is the abbreviation of the European Communities and this mark tells customs officials in the European Union that the product complies with one or more of the EC Directives.
	This mark is a certification mark employed on electronic products manufactured or sold in the United States which certifies that the electromagnetic interference from the device is under limits approved by the Federal Communications Commission.
IP22	Degree of protection against the ingress of water or particulate matter (for main unit/appliance).
	Consult User´s Manual
c UL us LISTED	The product meet UL's requirements for Canada and the United States.
	Conforms to relevant Australian EMC requirements

Symbol or Markings	Description
	Safety Class II equipment (reinforced insulation)
	This mark show the pin out polarity on the AC/DC Power Adapter.
-	Volume down
+	Volume up
	Type BF applied part
	Warning
	For indoor use.
Intertek GS geprüfte Sicherheit	Product full compliant German Product Safety law.
	This device might interfere with other equipment.

1.3 Intended Use

Tobii Dynavox Indi® 7 is a speech generating device (SGD) that includes communication software for people that have challenges in their ability to speak due to injury, disability or illness. The primary input method is touch, but the device also supports scanning input through Bluetooth or USB connected switches. With the Tobii Dynavox Indi® 7 the user has the freedom and flexibility provided by the Microsoft® Windows operating system, as well as the option to control TVs and other household appliances via the Infrared remote control functionality built in to the device (depending on configuration). The Tobii Dynavox Indi® 7 is a class I medical device.

The Indi® 7 device does not sustain or support life.

In case of failure of the Indi® 7 device, the user cannot communicate using it.

Intended use is primarily indoor environment.

1.4 Package Contents

It is recommended to keep the original packaging materials for the Indi® 7.

If device needs to be returned to Tobii Dynavox for Warranty related issues or repair, it is beneficial that the original packaging or equal equivalent is used for shipping. Most shipping carriers require at least 2 inches of packing material around the device.

Please note: Due to Joint Commission regulations, any shipping materials including boxes sent to Tobii Dynavox must be discarded.

1.4.1 Indi® 7 with Tobii Dynavox Communication Software

The items below are included with your Indi® 7 with Tobii Dynavox Communication Software package:

- 1 Indi® 7 Device
- 1 Power Supply for the Indi® 7 device
- 1 On the Go adapter cable (micro USB to USB)
- 1 Windows 10 license
- 1 Tobii Dynavox Snap™ + Core First® or Tobii Dynavox Communicator 5 (pre-installed)
- 1 Indi® 7 User's Manual (on the device as a PDF document)
- 1 Indi® 7 Quick Start Guide (printed)
- 1 Safety and Compliance document
- 1 Warranty Document

2 Safety

The Indi® 7 device has been tested and approved as compliant to all the Specifications and Standards listed in *Appendix B Compliance Information, page 22* of this manual and in the *Appendix C Technical Specifications, page 25* . Nevertheless, in order to ensure safe operation of your Indi® 7 device, there are a few safety warnings to bear in mind:

No modification of this equipment is allowed

The user may never attempt to change the battery. Altering of the battery may cause risk of explosion.

The Indi® 7 is not to be used as a life supporting Device, and it shall not be relied on in case of loss of function due to power loss or other causes.

There could be a choking hazard risk if small parts detach from the Indi® 7 device.

The Indi® 7 device shall not be exposed to or used in rain or weather conditions outside the Technical Specification of the Indi® 7 device.

Young children or people with cognitive disabilities should not have access to, or use, the Indi® 7 device without parental or guardian supervision.

The Indi® 7 device shall be used with care when moving around.

2.1 Avoiding Hearing Damage

Permanent hearing loss may occur if earphones, headphones or speakers are used at high volume. To prevent this, the volume should be set to a safe level. You can become desensitized over time to high sound levels which may then sound acceptable yet still could be damaging your hearing. If you experience symptoms such as ringing in your ears, please lower the volume or stop using the earphones/headphones. The louder the volume, the less time is required before your hearing could be affected.

Hearing experts suggest the following measures to protect your hearing:

- Limit the amount of time you use earphones or headphones at high volume.
- Avoid turning up the volume to block out noisy surroundings.
- Turn the volume down if you cannot hear people speaking near you.

To establish a safe volume level:

- Set your volume control at a low setting.
- Slowly increase the sound until you can hear it comfortably and clearly, without distortion.

2.2 Power Supply and Batteries

The Indi® 7 device contains a rechargeable battery. All rechargeable batteries degrade over time. Thus the possible usage times for the Indi® 7 after a full charge can become shorter over time than when the device was new.

The Indi® 7 device uses a Li-ion Polymer battery.

If you are in a hot environment, be aware that it can affect the ability to charge the battery. The internal temperature has to be between 0 °C/32 °F and 45 °C/113 °F for the battery to charge. If the internal battery temperature raises above 45 °C/113 °F the battery will not charge at all.

Move the Indi® 7 device to a cooler environment to let the battery charge properly.

Avoid exposing the Indi® 7 device to fire or to temperatures above 60 °C/140 °F. These conditions may cause the battery to malfunction, generate heat, ignite or explode. Be aware that it is possible, in a worst case scenario, for temperatures to reach greater than those stated above in, for example, the trunk of a car on a hot day. So, storing the Indi® 7 device, in a hot car trunk could conceivably lead to a malfunction.

Only charge the Indi® 7 battery in an ambient temperature of 0 °C/32 °F to 45 °C/113 °F.

Use only the supplied power adapter to charge the Indi® 7 device. Using unauthorized power adaptersmay severely damage the Indi® 7 device.

For safe operation of the Indi® 7 device, use only charger and accessories approved by Tobii Dynavox.

Do not open, or modify, the casing of the Indi® 7 device or of the power supply, since you may be exposed to potentially hazardous electrical voltage. The device contains no serviceable parts. If the Indi® 7 device or it's accessories are mechanically damaged, **do not to use them**.

If the battery is not charged or the Indi® 7 is not connected to the power supply, the Indi® 7 device will shut down.

If the Power Supply Cord is damaged it needs to be replaced by Service Personnel only. Do not use the Power Supply Cord until replaced.

Disconnect the AC power plug of the Power adapter from the wall socket when not charging the device and disconnect the power cable from the device.

Special regulations apply to shipping devices containing Li-ion Polymer batteries. If dropped, crushed, or short-circuited, these batteries can release dangerous amounts of heat, may ignite, and may be dangerous in fires.

Please reference IATA regulations when shipping lithium metal or lithium ion batteries or cells: http://www.iata.org/whatwedo/cargo/dangerous_goods/Pages/lithium_batteries.aspx

The Power adapter shall not be used without an adult or Caregiver supervision.

2.3 Temperature

Due to use in direct sunshine or in any other hot environment the Indi® 7 device may have hot surfaces. There is a built in temperature sensor that monitors the temperature. If the sensor detects high internal temperature, the device will automatically trigger a Windows Shut Down or Hibernate (depending on Windows Power Button configuration). It may take a while before Indi® 7 device can be restarted as the unit may first need time to cool down.

2.4 Mounting

The Indi® 7 should be mounted according to MANUFACTURER instructions of approved mounts. Tobii Dynavox or its agents are not liable for damage or injuries to a person or its property due to a Indi® 7 falling from a mounted configuration. The mounting of a Indi® 7 is done entirely at the user's own risk.

2.5 Emergency

Do not rely on the Indi® 7 device for emergency calls or banking transactions. We recommend having multiple ways to communicate in emergency situations. Banking transactions should only be carried out with a system recommended by, and approved according to the standards of your bank.

2.6 Electricity

Do not open the casing of the Indi® 7 device, since you may be exposed to potentially hazardous electrical voltage. The device contains no user serviceable parts.

2.7 Child Safety

The Indi® 7 are advanced computer systems and electronic devices. As such they are composed of numerous separate, assembled parts. In the hands of a child certain of these parts have the possibility of being separated from the device, possibly constituting a choking hazard or another danger to the child.

Young children should not have access to, or the use of, the device without parental or guardian supervision.

2.8 Software

Using an antivirus program is strongly recommended.

Software other than that which is pre-installed on the Indi® 7 is installed at the user's own risk. External software could cause the Indi® 7 to malfunction and might not be covered by the warranty.

2.9 Magnetic Field

The Indi® 7 device contains magnets. Magnetic fields may interfere with pacemakers, defibrillators, or other medical devices. As a general rule, maintain a minimum distance of 6 inches (15 centimeters) between any item with magnets and your heart device.

If you suspect that the Indi® 7 device is interfering with your pacemaker or any other medical device, stop using the Indi® 7 device and consult your physician for specific information about that affected medical device.

2.10 Third Party

Any use of the Indi® 7 outside the intended use and together with any third party software or hardware that changes the intended use is a risk and nothing that Tobii Dynavox can take any responsibility for.

2.11 Environmental Control

The Programmable IR Remote Control — Environmental Control Unit (ECU) is not to be relied on as the only method of interaction with IR controlled devices.

3 Overview of the Indi® 7

3.1 Key Features

The Indi® 7 has several built-in features.

- 2 × Cameras
- 1 × Internal microphones
- 1 × Micro-B USB 2.0 connectors
- 2 × Internal speakers
- 1 × Head phone connector
- 1 × Bluetooth®
- 1 × WLAN (Wireless Local Area Network)

3.2 Product Layout

A Indi® 7 device has a color Capacitive touch, LED Backlight screen. The Indi® 7 has an 7″ screen with a 1920 × 1200 pixel resolution.

3.2.1 Ports, Sensors and Device Buttons

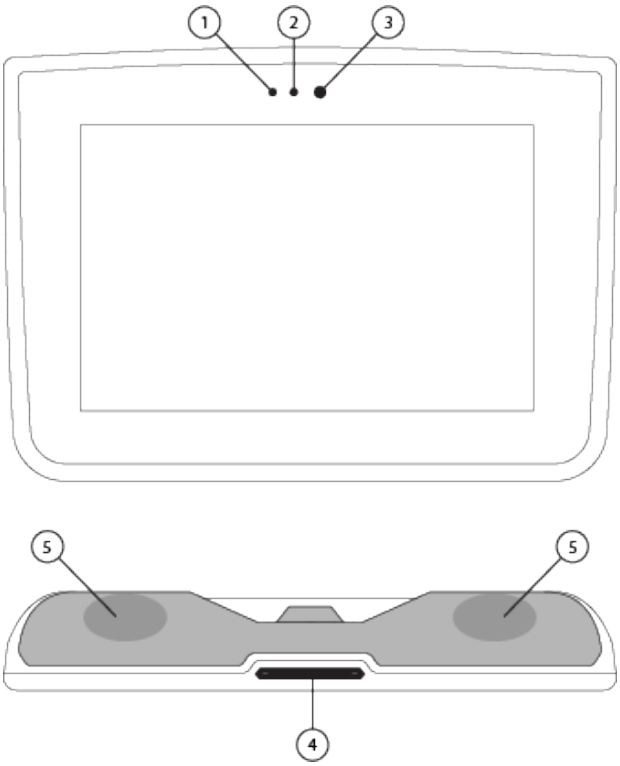

Figure 3.1 Indi® 7 Tablet

Position	Description	Position	Description
1	Charging Indicator	4	Volume Rocker Switch
2	Ambient Light Sensor	5	Speakers
3	Rear-facing Cam (Webcam)		

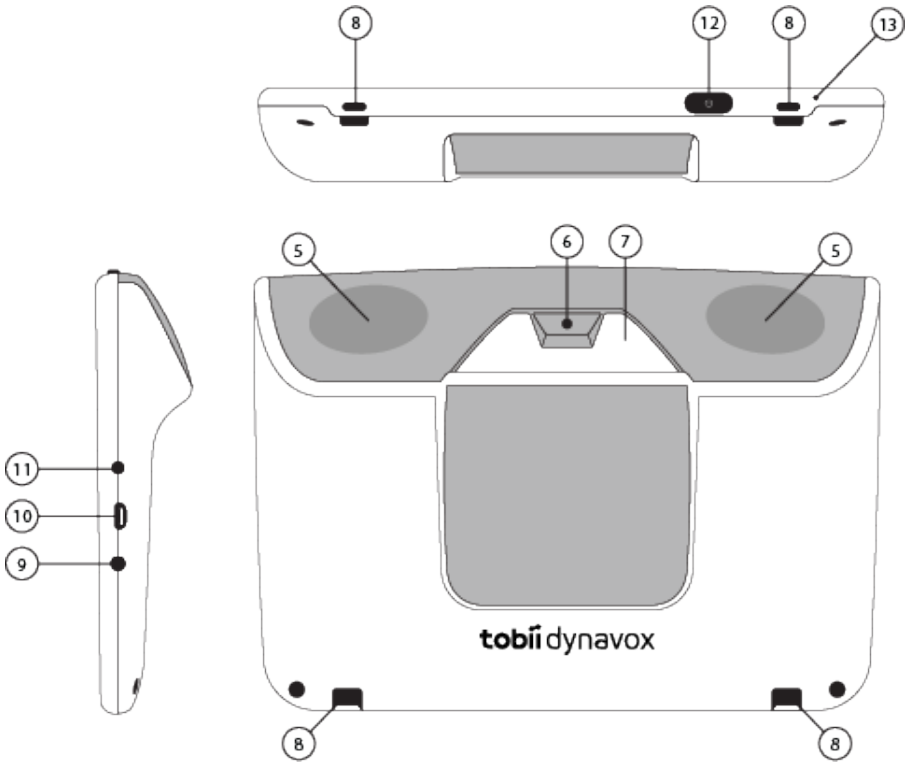

Figure 3.2 Indi® 7 Tablet

Position	Description	Position	Description
5	Speakers	10	Micro USB Port:
6	Front-facing Camera	11	Speaker/Headphone/External Microphone Jack:
7	Infrared Window	12	Power Button:
8	Lanyard connections	13	Built-in Microphone
9	Charging Port		

Never force a connector into a port. If the connector and port do not join with reasonable ease, they probably do not match. Make sure that the connector matches the port and that you have positioned the connector correctly in relation to the port.

Be extra careful with the USB connectors.

3.3 Preinstalled Software

The Indi® 7 device is delivered with all pre-ordered and required software installed and ready to use. Should a reinstallation become necessary at any stage, perform a Factory Recovery.

4 Batteries in the Indi® 7

4.1 Batteries

The Indi® 7 device has one built-in battery. Microsoft Windows gives battery warnings at certain levels. If the Indi® 7 device is not charged or powered up by the power supply, the Indi® 7 device will shut down automatically. For more information, see *Appendix C Technical Specifications, page 25*.

4.2 Charging the Tablet

1. Connect the Power cable to the charging port on the device.
2. Connect the Power adapter to an electrical outlet and charge the tablet until the battery is fully charged.
3. After your device is fully charged, disconnect the charger from both the device and the electrical outlet.

You **can't** overcharge the battery. It is fine to charge the battery overnight.

You **can** use the Indi® 7 while the battery is charging.

Because of internal chemical reactions, battery performance may deteriorate over time. In addition, failure to keep the conditions of use (charge, discharge, ambient temperature, etc.) within specified ranges may shorten the battery life expectancy, or damage your Indi® 7 device. If the battery cannot maintain a charge for long periods of time, even when it is charged correctly, it may need to be replaced.

The battery needs to be replaced every 12 to 18 months with typical use. Don't try to replace the battery yourself. The battery is internal and is not intended for service or replacement by the user or anyone other than a Tobii Dynavox technician.

For battery storage and charging temperatures, see *2 Safety, page 8* .

4.2.1 Checking Charge Level

To check the battery charge level of the Indi® 7, use the battery monitor within Windows 10.

4.2.2 Power LED Behavior

The Power LED will shine with two colors:

The Power LED will only shine when the Power adapter is plugged in.

- Blue — Fully charged
- Amber — Charging

5 Using the Indi® 7

No skill other then reading is necessary for setting up the Indi® 7 device. Follow this User´s Manual and the Quick Start Manual.

5.1 Starting the Device

Start the device in one of the following ways:

- Press the power button on the top of the device. (Position 1 in *Figure 3.1 Indi® 7 Tablet, page 11*)

5.1.1 Password Information

The Indi® 7 device is configured to start up without a password. Though unusual, there are situations in which the password window could pop up; for example, when creating a new user in the operating system, when returning from the operating system's sleep mode or when downloading software updates from the internet.

If you decide to use a password for your user account on your Indi® 7 device, be sure to write it down in a safe place for later use. Without the operating system's access password, Tobii Dynavox Support may be unable to assist you until you have recovered it through Microsoft.

The password is case sensitive.

Should the password window pop up, requiring a password, you need to know the password or where to find it. In order to type in the password use the Windows On-Screen Keyboard or an external USB keyboard (not included).

5.1.2 The Discover Tobii Dynavox app

When you start your Indi® 7 Device for the first time you will be greeted by the Discover Tobii Dynavox app. The guide is a setup wizard that will walk you through some steps that will help you make the most of your device.

Follow the instructions and select **Next** to get to the next page of the Discover Tobii Dynavox app.

5.2 Shutting Down the Indi® 7

The device should be should be shut down in the following way:

- Use the start menu in Windows (recommended when possible).

Should you be unable to shut the device down using the above, you can hold the power button on the top side of the device down for more than 20 seconds. The device will consequently shut down immediately, without waiting for open applications to close.

Reset can be performed by holding the power button on the top side of the device for three (3) seconds

This is not considered a "clean" Windows shut down and is thus not recommended unless completely necessary because it can harm you device.

5.3 Power Saving

The Power saving settings in the Indi® 7 tablet are preset to optimize the battery run-time. If needed, the time setting for sleep mode can be adjusted in Windows Power Options.

5.4 Using the Cameras

The two built-in cameras allows you to take snapshots of items facing the backside of the Indi® 7 device and also from the display side.

Use **Tobii Dynavox Communication Software** or other relevant software to operate the cameras.

5.5 Adjusting the Volume

To adjust the volume use the Volume Up and Down buttons (Position 2) on top side of the Indi® 7 device. For position references, see *Figure 3.1 Indi® 7 Tablet, page 11*

Volume adjustments can also be done in **Tobii Dynavox Communication Software** and in Windows.

5.6 Adjusting the Sound

You can configure the speakers using the **Windows 10 Control Panel > Sound**.

We refer to Microsoft's information on how to configure the sound in the Windows 10 Control Panel.

Sound adjustments can also be done in **Tobii Dynavox Communication Software**.

5.7 Using the Microphones

The Indi® 7 is equipped with microphone. If the keyguard cover is attached to the device, the performance of the microphone can be affected. If this is the case, an external microphone can be attached to the Head phone jack.

5.8 Tobii Dynavox Windows Settings Utility

With the Tobii Dynavox Windows Settings Utility it is possible to customize the some behavior of the Indi® 7. To access the Tobii Dynavox Windows Settings Utility follow this procedure:

1. Right click / Long hold on the Tobii Dynavox Windows Settings Utility icon, , in the Notification area

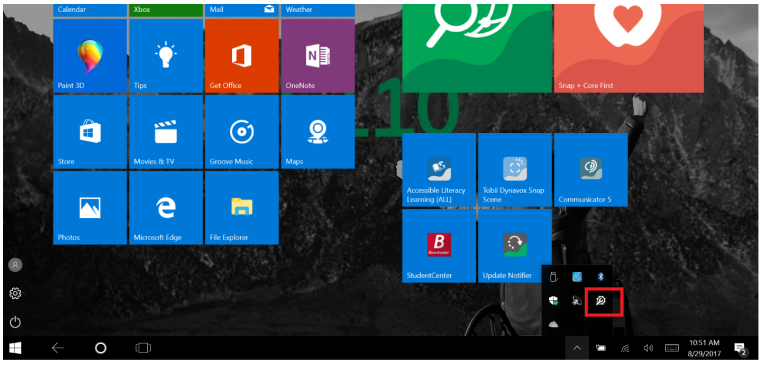

2. Select the **Settings** option.

Tobii Dynavox Windows Settings Utility

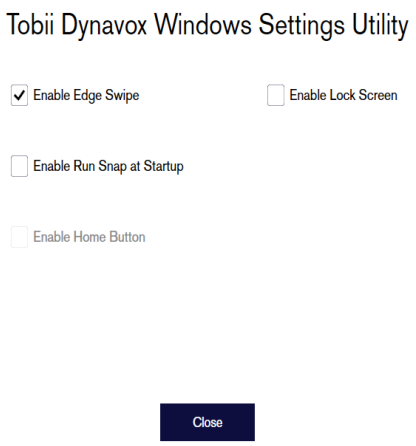

- **Enable Edge Swipe** — make sure the check box is checked to enable the Windows 10 Edge Swipe function.
  Edge Swipe is “enabled” by default. Edge Swiping will bring up the quick “Action Center” menu from the right side of the screen.
- **Enable Lock Screen** — make sure the check box is checked to enable the Lock Screen.
  The Lock Screen is “disabled” by default. This option is important if a user would like to use “Kiosk Mode” on the device. The Lock Screen must be enabled to use Kiosk Mode. Kiosk Mode is a great way to really lock the device down to the use of one app, such as Snap, and will not allow the user to access other programs on the device. For more information on Kiosk Mode, see https://docs.microsoft.com/en-us/windows/configuration/set-up-a-kiosk-for-windows-10-for-desktop-editions#set-up-assigned-access-in-pc-settings
- **Enable Run Snap at Startup** — make sure the check box is checked to automatically Run the Snap software when the Indi® 7 is starting up.
  Run Snap at Startup is “disabled” by default.
- **Enable Home Button** — Not valid for the Indi® 7

5.9 Reset the Indi® 7

If you have made a lot of different changes to the Indi® 7 and would like to start over, perform a Recovery from within Windows.

The Indi® 7 uses 100% native Windows 10 recovery/reset functionality.

1. Access the **Windows Settings** icon from the Windows desktop.
2. Select the **Updates and Security** option in Windows Settings.
3. Select the **Recovery** option in the left column.

4. Select the **Get Started** under the heading of **Reset this PC**.

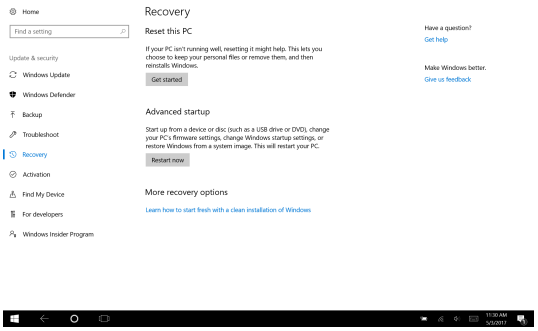

5. Select one of these options:

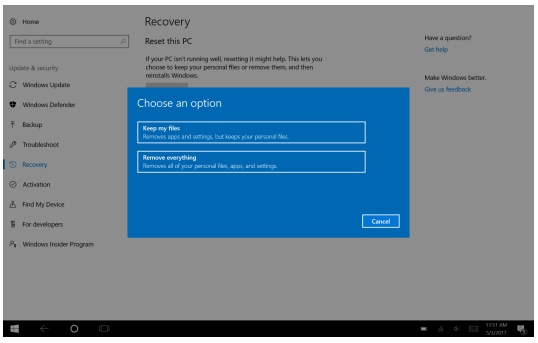

- Keep my files
  - Reinstalls Windows 10 and keeps your personal files.
  - Removes apps and drivers you installed.
  - Removes changes you made to settings.
  - Removes any apps your PC manufacturer installed. (If your PC came with Windows 10, apps from your PC manufacturer will be reinstalled.)

    The Configuration Manager app that runs at first login (prompting for the QR code) will restore any licensed Tobii Dynavox applications which are removed.

- Remove everything
  - Reinstalls Windows 10 and removes all your personal files.
  - Removes apps and drivers you installed.
  - Removes changes you made to settings.
  - Removes any apps your PC manufacturer installed. (If your PC came with Windows 10, apps from your PC manufacturer will be reinstalled.)

    The Configuration Manager will be re-run at startup and reinstall removed (Communicator) applications.

  Remove everything have two options:

  - Without **Clean the drive** — This option will take about one hour to perform.
  - With **Clean the drive** — This option will take many hours to perform.
    This option will also present the user with a BIOS message about resetting BitLocker encryption. The actual message occurs at reboot and looks like this:

```
A configuration change was requested to Clear this computer's TPM (Trusted Platform
Module)WARNING: Clearing erases information stored on the TPM: You will lose all cre-
ated keys and access to data encrypted by these Keys.
Press F12 to Clear the TPM.
Press ESC to reject this change request and continue
```

Just select **F12** to proceed with cleaning the drive or **ESC** to reject this change request and continue.

If you're planning to donate, recycle, or sell your PC, use this option and choose to *fully clean* the drive.

6. Select **Next** to continue or **Cancel** to abort.
7. Select **Reset** to continue or **Cancel** to abort.

This will take several minutes. When finished, the Indi® 7 will reboot and you will be presented with the Manual key entry menu.

Your Serial number and Product key will be auto filled with your information. You can also use the QR Code received with the original purchase.

Select the **Start** option.

6 Product Care

6.1 Temperature & Humidity

6.1.1 General Use - Operating temperature

The Indi® 7 is best kept in dry conditions at room temperature. The recommended range for temperature and the humidity value for the device is as follows:

- Ambient temperature: 0°C to 35°C (32°F to 95°F)
- Relative humidity: 10% to 90% (no condensation on the device)
- Atmospheric Pressure: 70 kPa to 106 kPa (525 mmHg to 795 mmHg)

6.1.2 Transportation and Storage

For transportation and storage the recommended range for temperature and the humidity value for the device is as follows:

- Temperature: -10°C to 45°C (14°F to 113°F)
- Relative humidity: 5% to 90% (no condensation on the device)
- Atmospheric Pressure: 50 kPa to 106 kPa (375 mmHg to 795 mmHg)

The Indi® 7 is not waterproof or water resistant and have an ingress protection of IP22. The device should not be kept in excessively humid, damp or otherwise wet conditions. Do not submerge the device in water or in any other liquid. Be careful not to allow liquids to be spilled upon the device especially in the connector areas.

6.2 Cleaning

Before cleaning the Indi® 7 device shut it down and unplug all cables. Use a soft, slightly damp lint-free cloth. Avoid getting moisture in openings on the device. Don't use window cleaners, household cleaners, aerosol sprays, solvents, alcohol, ammonia, or abrasives to clean the device.

6.2.1 Cleaning of the Speakers

If the openings for the speakers are clogged carefully use cotton swabs and/or a toothbrush to avoid damaging the Indi® 7 speakers.

6.3 Placement

Only use the recommended mounts specified by the your local reseller or sales representative and make sure that they are mounted and fastened correctly according to the instructions. Do not place the device on unstable and uneven surfaces.

6.4 Transporting the Indi® 7 Device

Disconnect all the cables from the Indi® 7 while carrying the device.

When you transport the device for repair, shipment or traveling, use the original casing and packaging materials.

It is recommended to keep the original packaging materials for the Indi® 7.

If device needs to be returned to Tobii Dynavox for Warranty related issues or repair, it is beneficial that the original packaging or equal equivalent is used for shipping. Most shipping carriers require at least 2 inches of packing material around the device.

Please note: Due to Joint Commission regulations, any shipping materials including boxes sent to Tobii Dynavox must be discarded.

6.5 Disposing of the Indi® 7 Device

Do not dispose of the Indi® 7 Device in general household or office waste. Follow your local regulations for the disposal of electrical and electronic equipment.

Appendix A Support, Warranty, Training Resources

A1 Customer Support

For support, please contact your local representative or Support at Tobii Dynavox. In order to receive assistance as quickly as possible, make sure you have access to your Indi® 7 device and, if possible, an Internet connection. You should also be able to supply the serial number of the device, which you will find on the Service tag label.

For further product information and other support resources, please visit www.tobiidynavox.com.

A2 Warranty

Please read the Manufacturer's Warranty paper included in the package.

Please read this User's Manual carefully before using the device. The warranty is only valid if the device is used according to the User's Manual. Disassembling the Indi® 7 device will void the warranty.

It is recommended to keep the original packaging materials for the Indi® 7.

If device needs to be returned to Tobii Dynavox for Warranty related issues or repair, it is beneficial that the original packaging or equal equivalent is used for shipping. Most shipping carriers require at least 2 inches of packing material around the device.

Please note: Due to Joint Commission regulations, any shipping materials including boxes sent to Tobii Dynavox must be discarded.

A3 Training Resources

Tobii Dynavox offer a range of training resources for the Indi® 7 products and related communication products. You can find them on the, www.tobiidynavox.com or www.myTobiiDynavox.com, including Getting Started Guides, webinars and Quick guides. The Indi® 7 Quick Start Manual is delivered with, and stored on, the Indi® 7 device.

Appendix B Compliance Information

B1 FCC Statement

This device complies with Part 15 of the FCC Rules. Operation is subject to the following two conditions: (1) this device may not cause harmful interference and (2) this device must accept any interference received, including interference that may cause undesired operation.

Modifications not expressly approved by Tobii Dynavox could void the user's authority to operate the equipment under FCC rules.

B1.1 For Part 15B Equipment

This equipment has been tested and found to comply with the limits for a Class B digital device, pursuant to part 15 of the FCC rules. These limits are designed to provide reasonable protection against harmful interference in a residential installation. This equipment generates, uses and can radiate radio frequency energy and, if not installed and used in accordance with the instructions, may cause harmful interference to radio communications.

However, there is no guarantee that interference will not occur in a particular installation. If this equipment does cause harmful interference to radio or television reception, which can be determined by turning the equipment off and on, the user is encouraged to try to correct the interference by one or more of the following measures:

- Reorient or relocate the receiving antenna.
- Increase the separation between the equipment and receiver.
- Connect the equipment into an outlet on a circuit different from that to which the receiver is connected.
- Consult the dealer or an experienced radio/TV technician for help.

B1.2 For Portable Devices

FCC RF Radiation Exposure Statement:

1. This Transmitter must not be co-located or operating in conjunction with any other antenna or transmitter.
2. This equipment complies with FCC RF radiation exposure limits set forth for an uncontrolled environment. This device was tested for typical hand held operations with the device contacted directly to the human body to the sides of the device. To maintain compliance with FCC RF exposure compliance requirements, avoid direct contact to the transmitting antenna during transmitting.

B2 Radio Wave Exposure and Specific Absorption Rate (SAR) Information

The Indi® 7 device has been tested as a Class 1 Medical Device. Medical electrical equipment such as this requires special caution regarding Electro-magnetic Compatibility (EMC) and thus needs to be installed and placed into service according to the information provided in this manual.

Using other cables and accessories other than those provided or that are integrated in the device may affect EMC performance.

The SAR (Specific Absorbtion Rate) limit as dictated by the FCC (in the USA) and by the IC (in Canada) is 1.6W/kg averaged over 1 gram of tissue. In Europe/EU (CE regulations) it is 2.0 W/kg averaged over 10 grams of tissue. The Devices, Indi® 7 (FCC ID: W5M-indi7), (IC ID 5534A-indi7) have been tested against these SAR limits to maintain compliance with FCC/IC/CE RF exposure requirements.

This equipment complies with FCC/IC/EU RF radiation exposure limits set forth for an uncontrolled environment.

The highest SAR value for the Indi® 7 device is 0.88W/kg.

In order to maintain compliance as a Class 1 Medical device, the switches that are used in combination with the Indi® 7 device must fulfill the isolation requirements of IEC/EN 60601-1 based on 15 V DC. They must be electrically floating switches (switches that are not grounded).

B3 Industry Canada Statement

Caution

(i) The device for operation in the band 5150-5250 MHz is only for indoor use to reduce the potential for harmful interference to co-channel mobile satellite systems;
(ii) The maximum antenna gain permitted for devices in the bands 5250-5350 MHz and 5470-5725 MHz shall be such that the equipment still complies with the e.i.r.p. limit;
(iii) The maximum antenna gain permitted for devices in the band 5725-5850 MHz shall be such that the equipment still complies with the e.i.r.p. limits specified for point-to-point and non-point-to-point operation as appropriate; and
(iv) Users should also be advised that high-power radars are allocated as primary users (i.e. priority users) of the bands 5250-5350 MHz and 5650-5850 MHz and that these radars could cause interference and/or damage to LE-LAN devices.

Avertissement

(i) les dispositifs fonctionnant dans la bande 5150-5250 MHz sont réservés uniquement pour une utilisation à l'intérieur afin de réduire les risques de brouillage préjudiciable aux systèmes de satellites mobiles utilisant les mêmes canaux;
(ii) le gain maximal d'antenne permis pour les dispositifs utilisant les bandes de 5250 à 5350 MHz et de 5470 à 5725 MHz doit être conforme à la limite de la p.i.r.e;
(iii) le gain maximal d'antenne permis (pour les dispositifs utilisant la bande de 5725 à 5850 MHz) doit être conforme à la limite de la p.i.r.e. spécifiée pour l'exploitation point à point et l'exploitation non point à point, selon le cas;
(iv) De plus, les utilisateurs devraient aussi être avisés que les utilisateurs de radars de haute puissance sont désignés utilisateurs principaux (c.-à-d., qu'ils ont la priorité) pour les bandes 5250-5350 MHz et 5650-5850 MHz et que ces radars pourraient causer du brouillage et/ou des dommages aux dispositifs LANEL.

This device (IC ID: 5534A-indi7) has been tested to the safety requirements for exposure to radio waves (SAR) in RSS-102 to the General Public (Uncontrolled Environment) limits (1.6W/Kg). The highest SAR value for the Indi® 7 device is 0.88 W/kg.. This device can be operated safely with a minimum distance 0 cm between the equipment and the user's body.

Ce dispositif (IC ID: 5534A-indi7) a été testé aux exigences de sécurité pour l'exposition aux ondes radio (SAR) dans le CNR-102 à le grand public (environnement non contrôlé) des limites (1.6W/Kg). La valeur maximale mesurée de SAR pour le Indi® 7 dispositif est: 0.88W/kg. . Ce dispositif peut être exploité en toute sécurité avec un 0cm distance minimale entre le matériel et les corps de l'utilisateur.

This Class B digital apparatus complies with Canadian ICES-003.

Cet appareil numérique de la classe B est conforme à la norme NMB—003 du Canada.

This device complies with Industry Canada license-exempt RSS standard(s). Operation is subject to the following two conditions: (1) this device may not cause interference, and (2) this device must accept any interference, including interference that may cause undesired operation of the device.

Le présent appareil est conforme aux CNR d'Industrie Canada applicables aux appareils radio exempts de licence. L'exploitation est autorisée aux deux conditions suivantes: (1) l'appareil ne doit pas produire de brouillage, et (2) l'utilisateur de l'appareil doit accepter tout brouillage radioélectrique subi, même si le brouillage est susceptible d'en compromettre le fonctionnement.

B4 CE Statement

This equipment complies with the requirements relating to electromagnetic compatibility, the essential protection requirement of Electromagnetic Compatibility (EMC) Directive 2014/30/EU on the approximation of the laws of the Member States relating to electromagnetic compatibility and Radio Equipment Directive (RED) 2014/53/EU to meet the regulation of the radio equipment and telecommunications terminal equipment.

B5 Directives and Standards

The Indi® 7 complies with the following directives:

- Medical Device Regulation (MDR)
- Low voltage Directive 2014/35/EU
- Electromagnetic Compatibility (EMC) Directive 2014/30/EU
- Radio Equipment Directive (RED) 2014/53/EU
- RoHS2 Directive 2011/65/EU
- WEEE Directive 2012/19/EU

- Reach Directive 2006/121/EC, 1907/2006/EC Annex 17
- Batteries Directive 2013/56/EU

The device has been tested to comply with IEC 60601-1 Ed 3.1, EN 62368-1, ISO 14971:2007 and EN ISO 14971:2012 and other relevant standards for the intended markets.

Appendix C Technical Specifications

C1 Indi® 7

Standard	**Indi® 7**
Type	Speech Tablet PC
Model	Indi® 7
Screen	7″, Aspect ratio: 16:10, LED Backlight Unit
Screen Resolution	1920 × 1200
Touch Panel	Multi point Capacitive Touch
Dimensions (WxHxD)	203 × 145 × 30 mm 8 × 5.7 × 1.2 inches
Weight	500 g 1 lbs
Speakers	2 × 40 mm × 30 mm, 8 ohm, 3 W
Microphone	Analog Microphone
Processor	Intel Atom Z8350 – 4 cores, 2 MB cache, 1.44 Ghz
RAM	4 GB
Operating system	Microsoft® Windows 10 Pro 64-Bit
Flash drive	64 GB eMMC
Sensors	3-axis gyro, accelerometer, compass, ambient light sensor
Connectors	1× DC in 12 VDC 3 A 1 × 3.5 mm" Headset/Audio-out port (stereo) with jack detection (Headphone and micro-phone port) 1 × Micro-B USB 2.0
Buttons	1 × Power On 1 × Volume Up 1 × Volume Down
WLAN/Bluetooth®	IEEE 802.11 a/ac/b/g/n function Bluetooth®BLE+ 2.1
IR Remote Control (Envi-ronmental Control Unit)	Learning remote with integrated library of pre-programmed devices
Camera	Rear-facing: 1.3 Mega pixels Front-facing: 8 Mega pixels
Battery Run Time	> 8 hours. normal usage
Battery Technology	Li-ion Polymer rechargeable battery
Battery Capacity	23.68 Wh
Battery Charge Time	< 4 hours
Power Supply	12 VDC 3A AC adapter
IP class	IP 22

C2 Power Adapter

Item	Specification
Model	MTP451BX - 120300
Input voltage	100 to 240 VAC
Input current (max)	1.5 A
Input frequency	50 to 60 Hz
Output current	3A
Rated output voltage	12 VDC

Appendix D Approved Accessories

For information about the latest approved Accessories for the Indi® 7, please visit www.TobiiDynavox.com or contact your local Tobii Dynavox reseller.

tobii dynavox

#12006596 Tobii Dynavox Indi® 7 User's manual v.1.0.1 - en-US

Copyright ©Tobii AB (publ). Illustrations and specifications do not necessarily apply to products and services offered in each local market. Technical specifications are subject to change without prior notice. All other trademarks are the property of their respective owners.

Support for Your Tobii Dynavox Device

Get Help Online

See the product-specific Support page for your Tobii Dynavox device. It contains up-to-date information about issues and tips & tricks related to the product.Find our Support pages online at: *www.TobiiDynavox.com/support-training*

Contact Your Sales Representative or Reseller

For questions or problems with your product, contact your Tobii Dynavox sales representative or authorized reseller for assistance. They are most familiar with your personal setup and can best help you with tips and product training. For contact details, visit *www.TobiiDynavox.com/contact*