eROU_67835L2_X

User Manual

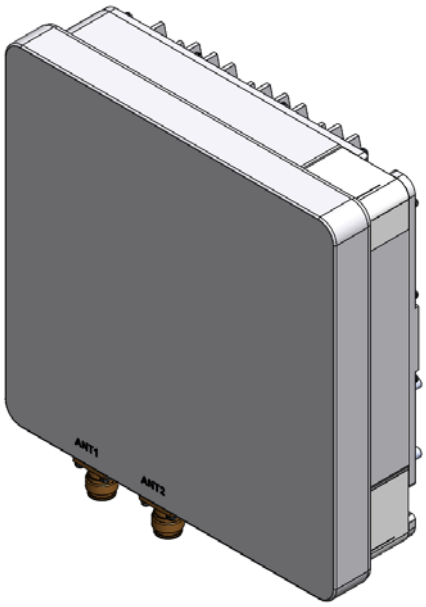

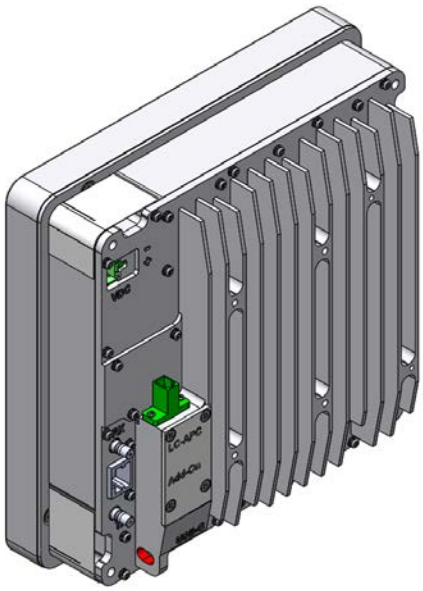

Document Reference:

Version:	V1.0
Document Status:	Release 1
Issue Date:	Feb 05, 2021
Author:	Dong-Gwon Yeo
Department:	R&D Division Team 2
Authorizing Manager:	hyun-suk Chae

REVISION HISTORY

Version	Issue Date	No. of Pages	Initials	Details of Revision Changes
V 1.0	February 05, 2021		Original	

Technical Support

SOLiD serial numbers must be available to authorize technical support and/or to establish a return authorization for defective units. The serial numbers are located on the back of the unit, as well as on the box in which they were delivered. Additional support information may be obtained by accessing the SOLiD Tehcnology, Inc. website at www.solid.co.kr or send email at sjkim@solid.co.kr

This manual is produced by Global Business Division Business Team Printed in Korea.

Contents

Section1 Safety & Certification Notice *4*

Section2 System configuration and Functions *8*

2.1 eROU(edge Remote Optic Unit) **8**

2.1.1 Specifications of eROU 9

2.1.2 Port on eROU 10

2.1.2.1 Functions 10

Section3 System Installation *13*

3.1 eROU Installation **13**

3.1.1 eROU Enclosure installation 13

3.1.2 eROU(Internal Antenna) Mount Installation_ Case .1 14

3.1.3 eROU(Internal Antenna) Mount Installation_ Case .2 14

3.1.4 eROU(Internal Antenna) Mount Installation_ Case .3 15

3.1.5 eROU(External Antenna) Mount Installation 15

3.1.6 Installation Cable Gland 16

3.1.7 Power cabling 17

Section1

Safety & Certification Notice

"Only qualified personnel should handle the DAS equipment. Any person involved in installation or service of the DAS should understand and follow these safety guidelines."

- Obey all general and regional installation and safety regulations relating to work on high voltage installations, as well as regulations covering correct use of tools and personal protective equipment.

- The power supply unit in repeaters contains dangerous voltage level, which can cause electric shock. Switch the mains off prior to any work in such a repeater. Any local regulations are to be followed when servicing repeaters.

- eROU equipment is exclusive to the indoor.

- Use this unit only for the purpose specified by the manufacturer. Do not carry out any modifications or fit any spare parts which are not sold or recommended by the manufacturer. This could cause fires, electric shock or other injuries.

- Any DAS system or Fiber BDA will generate radio (RF) signals and continuously emit RF energy. Avoid prolonged exposure to the antennas. SOLiD recommends maintaining a 70 cm minimum clearance from the antenna while the system is operating.

- Do not operate this unit on or close to flammable materials, as the unit may reach high temperatures due to power dissipation.

- Do not use any solvents, chemicals, or cleaning solutions containing alcohol, ammonia, or abrasives on the DAS equipment. Alcohol may be used to clean fiber optic cabling ends and connectors.

- To prevent electrical shock, switch the main power supply off prior to working with the DAS System or Fiber BDA. Never install or use electrical equipment in a wet location or during a lightning storm.

- Do not look into the ends of any optical fiber or directly into the optical transceiver of any digital unit. Use an optical spectrum analyzer to verify active fibers. Place a protective cap over any radiating transceiver or optical fiber connector to avoid the potential of radiation exposure.

- Allow sufficient fiber length to permit routing without severe bends.

- For pluggable equipment, make sure to install the socket outlet near the equipment so that it is easily accessible.

- A readily accessible disconnect device shall be incorporated external to the equipment.

- This power of this system shall be supplied through wiring installed in a normal building.

If powered directly from the mains distribution system, it shall be used additional protection, such as

overvoltage protection device

- Only 50 ohm rated antennas, cables and passive equipment shall be used with this remote. Any equipment attached to this device not meeting this standard may cause degradation and unwanted signals in the bi-directional system. All components connected to this device must operate in the frequency range of this device.

- Only 50 ohm rated antennas, cables and passive components operating from 150 - 3 GHz shall be used with this device.

- The head end unit must always be connected to the Base Station using a direct cabled connection. This system has not been approved for use with a wireless connection via server antenna to the base station.

- Access can only be gained by SERVICE PERSONS or by USERS who have been instructed about the reasons for the restrictions applied to the location and about any precautions that shall be taken; and
- Access is through the use of a TOOL or lock and key, or other means of security, and is on trolled by the authority responsible for the location.
- Notice! Be careful not to touch the Heat-sink part due to high temperature.

- Signal booster warning label message should include

Part 90 and Part 20 Signal Boosters	THIS IS A 90.219. CLASS B DEVICE
WARNING. This is NOT a CONSUMER device. It is designed for installation by FCC LICENSEES and QUALIFIED INSTALLERS. You MUST have an FCC LICENSE or express consent of an FCC Licensee to operate this device. You MUST register Part 90 Class B signal boosters (as defined in 47 CFR 90.219) online at www.fcc.gov/signal-boosters/registration. Unauthorized use may result in significant forfeiture penalties, including penalties in excess of $100,000 for each continuing violation.	

- Certification

- FCC: This equipment complies with the applicable sections of Title 47 CFR Parts 15, 22, 27 and 90(Class B)
  - Use of unauthorized antennas, cables, and/or coupling devices not conforming with ERP/EIRP and/or indoor-only restrictions is prohibited.
  - Home/ personal use are prohibited.
- UL/CUL: This equipment complies with UL and CUL 62368-1 Standard for safety for information technology equipment,including electrical business equipment

- FDA/CDRH: This equipment uses a Class 1 LASER according to FDA/CDRH Rules.This product conforms to all applicable standards of 21 CFR Chapter 1, Subchaper J, Part 1040

- IC Booster warning label message should include

WARNING: This is NOT a CONSUMER device. It is designed for installation by an installer approved by an ISED licensee. You MUST have an ISED LICENCE or the express consent of an ISED licensee to operate this device.

Section2

System configuration and Functions

2.1 eROU(edge Remote Optic Unit)

eROU receives TX optical signals from eHUB and converts them into RF signals. The converted RF signal is radiated to the antenna port via the AMP and Multiplexer.

When receiving RX signals through the antenna port, this unit filters out-of-band signals in a corresponding Multiplexer and sends the results to OPTIC to make electronic-optical conversion of them. After converted, the signals are sent to a upper device of eHUB.

The eROU supports up to 4 bands.

In addition, if band extension is required, another eROU can be added up to three using optical splitters and RF ports. However, the band expansion equipment will be developed in the future.

And eROU is divided into an Internal product with an antenna and an External product without an antenna. (*Note: External product(Model name: eROU_67835L2_X)

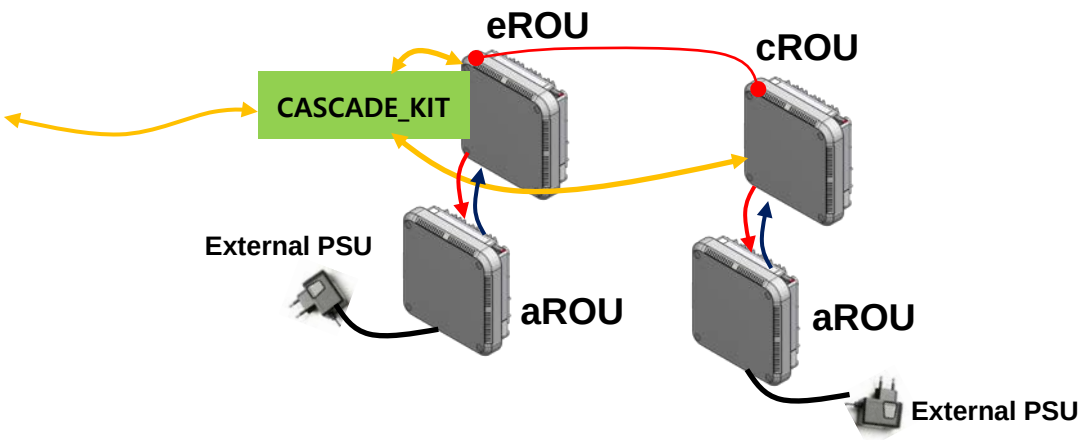

Figure 1. eROU Configuration Diagram

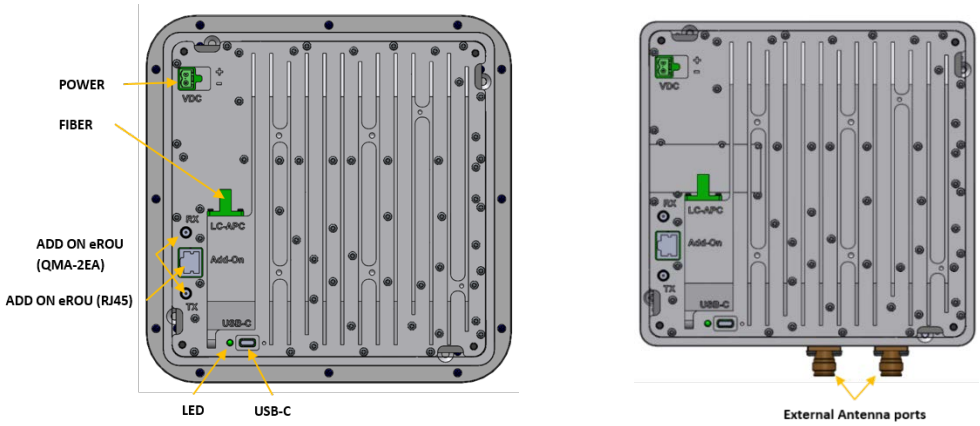

<Integrated Antenna> <External Antenna_eROU_67835L2_X>

Figure 2. eROU outer Look

2.1.1 Specifications of eROU

Item	Spec.			Remark
	eROU			
The rated mean output Power per band	600	+17dBm		
	700LTE_FN	+17dBm		
	850IC	+17dBm		
The nominal downlink bandwidth	600	35MHz		
	700LTE_FN	39MHz		
	850IC	32MHz		
The nominal uplink bandwidth	600	35MHz		
	700LTE_FN	38MHz		
	850IC	32MHz		
The nominal passband gain	Downlink	600	37dB	w/ iBIU and eHUB
		700LTE_FN	37dB	
		850IC	37dB	
	Uplink	600	47dB	w/ iBIU and eHUB
		700LTE_FN	47dB	
		850IC	47dB	

Input/ Output Impedance	50 ohm	
Weight	N.A	Common Part
	3.0 kg(d)	
Power consumption	35W	
Temperature range	-5°C to +50°C	Ambient Temperature
Humidity Range	5% ~ 90%	Non-condensing
Sealing (Remote Unit)	IEC/UL/CSA 62368-1	
Size(mm)	220 x 220 x 65	Integrated Antenna
	200 x 200 x 45	External Antenna

2.1.2 Port on eROU

2.1.2.1 Functions

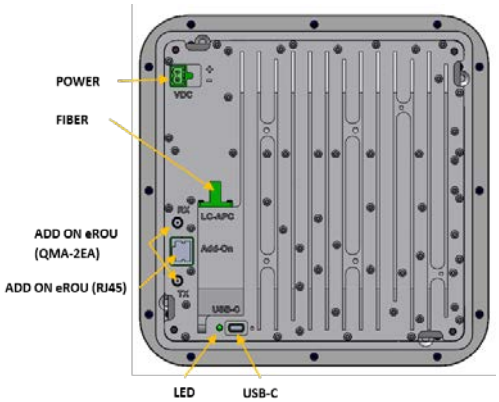

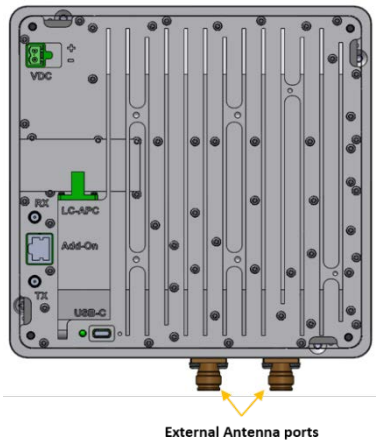

<Integrated Antenna> <External Antenna>

Figure 3. The name of each port on eROU

No	Port	Quantity	Remark
1	Optical Port	1EA	LC/APC
2	ANTENNA PORT(External Only)	2EA	2.2-5 type female
3	Power IN	1EA	Terminal_Block_CONN_2P(TLPS-302V-02P-G)
4	ADD ON eROU Port	2EA	QMA-type female
5	ADD ON eROU Port	1EA	RJ45
6	USB Port	1EA	USB-C Type

RSS-GEN (transmitters)

Under Industry Canada regulations, this radio transmitter may only operate using an antenna of a type and maximum (or lesser) gain approved for the transmitter by Industry Canada. To reduce potential radio interference to other users, the antenna type and its gain should be so chosen that the equivalent isotropically radiated power (e.i.r.p.) is not more than that necessary for successful communication.
(The antenna is not supported with this model. So, The antenna must not exceed Max. Gain 17dBi, to comply with IC regulation.)

Conformément à la réglementation d'Industrie Canada, le présent émetteur radio peut fonctionneravec une antenne d'un type et d'un gain maximal (ou inférieur) approuvé pour l'émetteur par Industrie Canada. Dans le but de réduire les risques de brouillage radioélectrique à l'intention desautres utilisateurs, il faut choisir le type d'antenne et son gain de sorte que la puissance isotroperayonnée quivalente (p.i.r.e.) ne dépassepas l'intensité nécessaire à l'établissement d'une communication satisfaisante.
(L'antenne n'est pas supportée par ce modèle. Donc, l'antenne ne doit pas dépasser Max. Gain 17dBi, pour se conformer à la réglementation d'IC.)

RF Radiation Exposure

This equipment complies with RF radiation exposure limits set forth for an uncontrolled environment. This equipment should be installed and operated with a minimum distance of 70 cm between the radiator and your body. This transmitter must not be co-located or operating in conjunction with any other antenna or transmitter. RF exposure will be addressed at time of installation and the use of higher gain antennas may require larger separation distances.

RSS-102 RF Exposure

L'antenne (ou les antennes) doit être installée de façon à maintenir à tout instant une distance minimum de au moins 70 cm entre la source de radiation (l'antenne) et toute personne physique. Cet appareil ne doit pas être installé ou utilisé en conjonction avec une autre antenne ou émetteur.

FCC Part 15.105 statement

This equipment has been tested and found to comply with the limits for a Class A digital device, pursuant to part 15 of the FCC Rules. These limits are designed to provide reasonable protection against harmful interference when the equipment is operated in a commercial environment. This equipment generates, uses, and can radiate radio frequency energy and, if not installed and used in accordance with the instruction manual, may cause harmful interference to radio communications. Operation of this equipment in a residential area is likely to cause harmful interference in which case the user will be required to correct the interference at his own expense.

FCC Part 15.21 statement

Any changes or modifications not expressly approved by the party responsible for compliance could void the user's authority to operate this equipment.

RF Exposure Statement

The antenna(s) must be installed such that a minimum separation distance of at least 70 cm is maintained between the radiator (antenna) and all persons at all times. This device must not be co-located or operating in conjunction with any other antenna or transmitter.

Section3 System Installation

3.1 eROU Installation

The following table shows the required accessories and tools for installing eROU.

No	Tools	Q'ty	Specification	Remark
1		1	(+), Ø3.0 Length is more than 20mm	For fixing

3.1.1 eROU Enclosure installation

The eROU can be mounted on a wall or ceiling.

and divided into the version of External Antena and the version of Internal Antena.

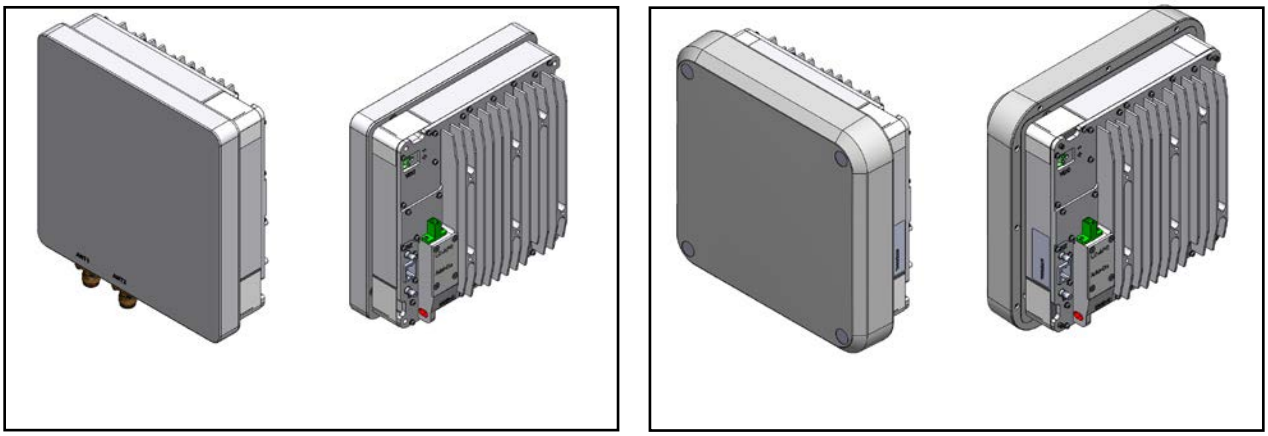

Figure 4. eROU appearance (Left : External Antenna, Right : Internal Antenna)

3.1.2 eROU(Internal Antenna) Mount Installation_ Case .1

① Make a square hole in the ceiling panel. Use the packaged installation plate.

② Insert the eROU into the pierced square hole.

③ Tighten the screws to the four corners.

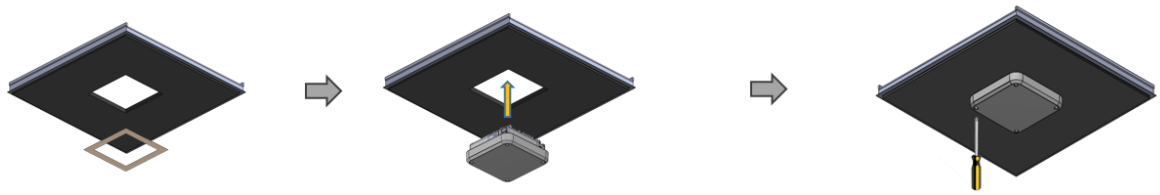

④ When the screws are turned, the inner blocks rotate together and are secured to the ceiling panel.

⑤ Cover the screw hole with a wrapped gauze. (4EA)

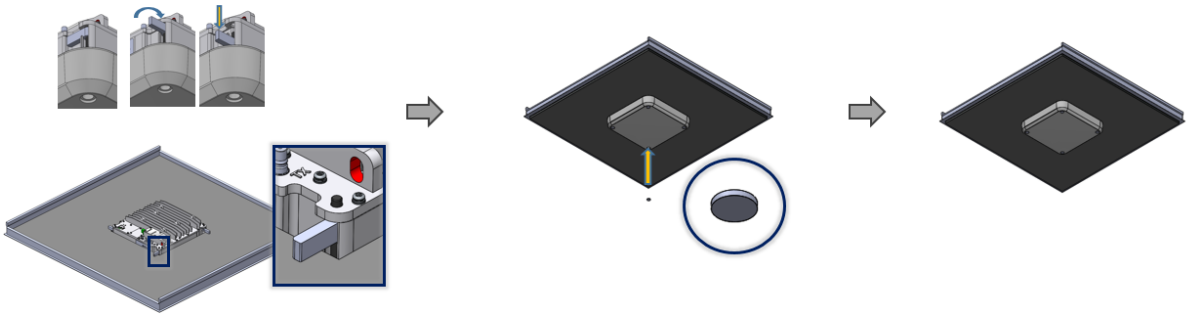

3.1.3 eROU(Internal Antenna) Mount Installation_ Case .2

① Insert the bolt (2EA) into the SUB BRACKET and fasten the washer and nut.

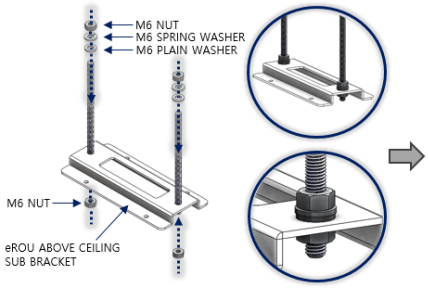

② Fix eROU body to the sub bracket with attached screws.

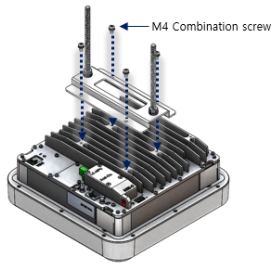

③ Tighten the M6 nut to the bolt to adjust the height to which the eROU will be held, and then attach the rest of the Brackets, washers and nuts as follows.

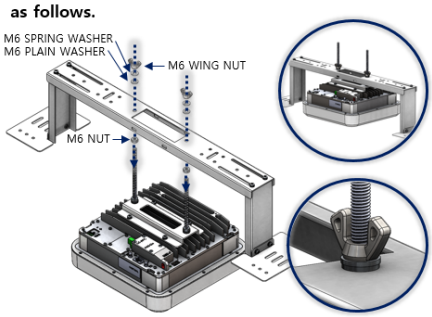

④ Resize gap between sidebars properly. Gap size is depending on ceiling grid environment. (450~600mm)

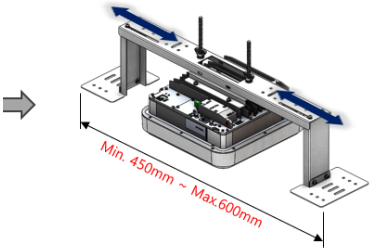

⑤ Put the bracket carefully on the ceiling panel.

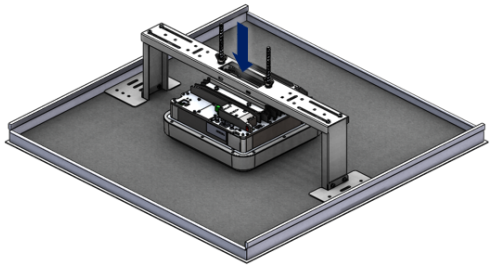

3.1.4 eROU(Internal Antenna) Mount Installation_ Case .3

① Make a square hole in the ceiling panel.
Use the packaged installation plate.

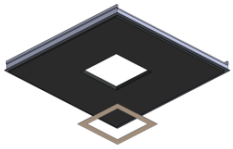

② Insert the bolt (2EA) into the SUB BRACKET and fasten the washer and nut.

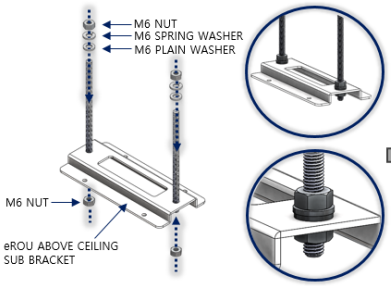

③ Fix eROU body to the sub bracket with attached screws.

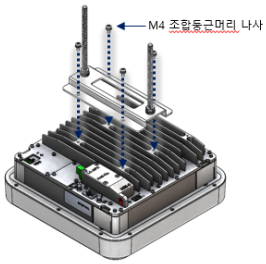

④ Tighten the M6 nut to the bolt to adjust the height to which the eROU will be held, and then attach the rest of the Brackets, washers and nuts as follows.

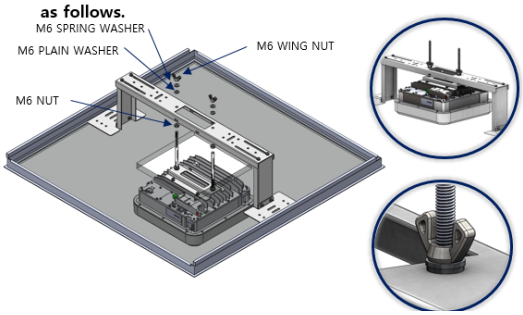

⑤ Resize gap between sidebars properly.
Gap size is depending on ceiling grid environment. (450~600mm)

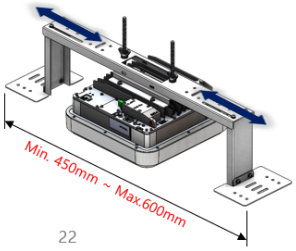

⑥ Put the bracket carefully on the ceiling panel.

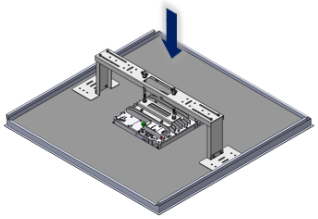

22

3.1.5 eROU(External Antenna) Mount Installation

① Tighten the BRACKET_WALL and M6 anchor bolts to the wall.

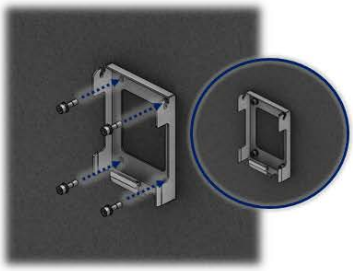

② Fix eROU body to the bracket with attached screws.

③ After the eROU bracket ring is passed through the wall bracket groove,
Tighten so that the Captive screw is jammed.

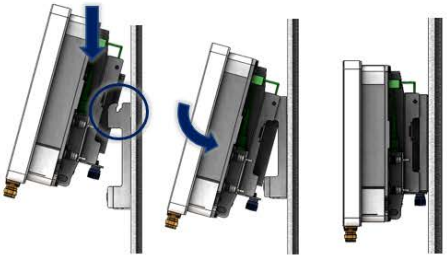

④ Use 2.5mm Hex driver to fix the captive screw.

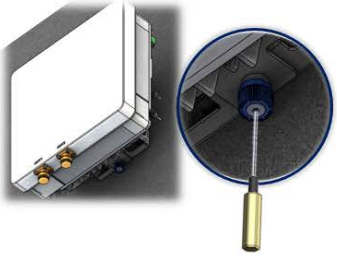

⑤ Check the features in the installed direction.

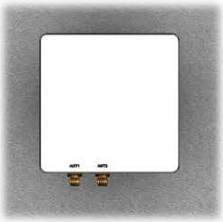

3.1.6 Installation Cable Gland

3.1.6.1 eROU

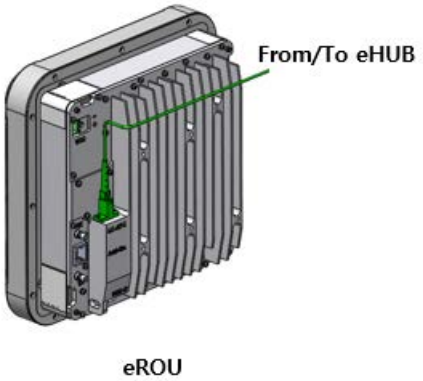

3.1.6.2 Combine of eROU and cROU

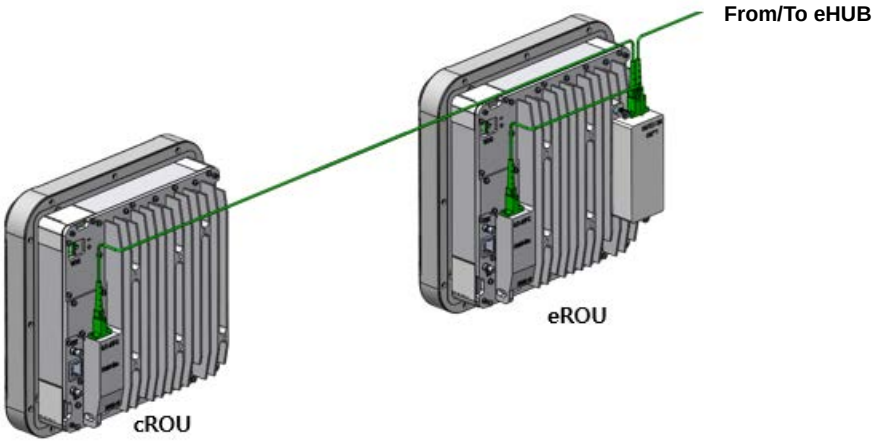

3.1.7 Power cabling

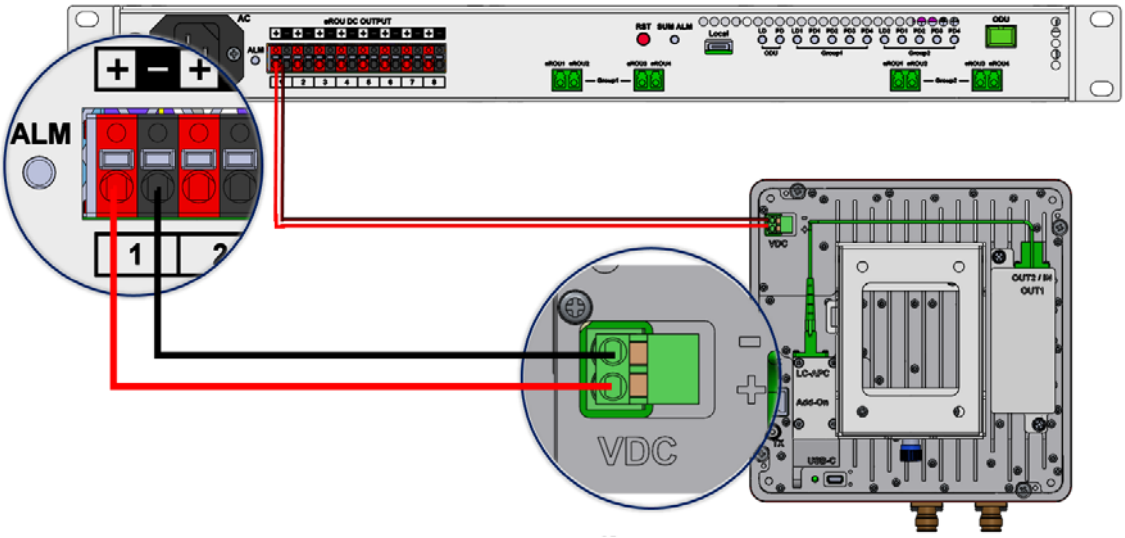

1. The eROU receives DC power from the eHub or external adapter.
2. Cable length between eHub and eROU supports up to 2.4 km.(Cable specifications recommend AWG14.)
3. If the maximum length between the eHub and the eROU is exceeded, the use of the External Adapter is recommended.

** Adaptor is extra purchases. Specified below shall be used only adapter.
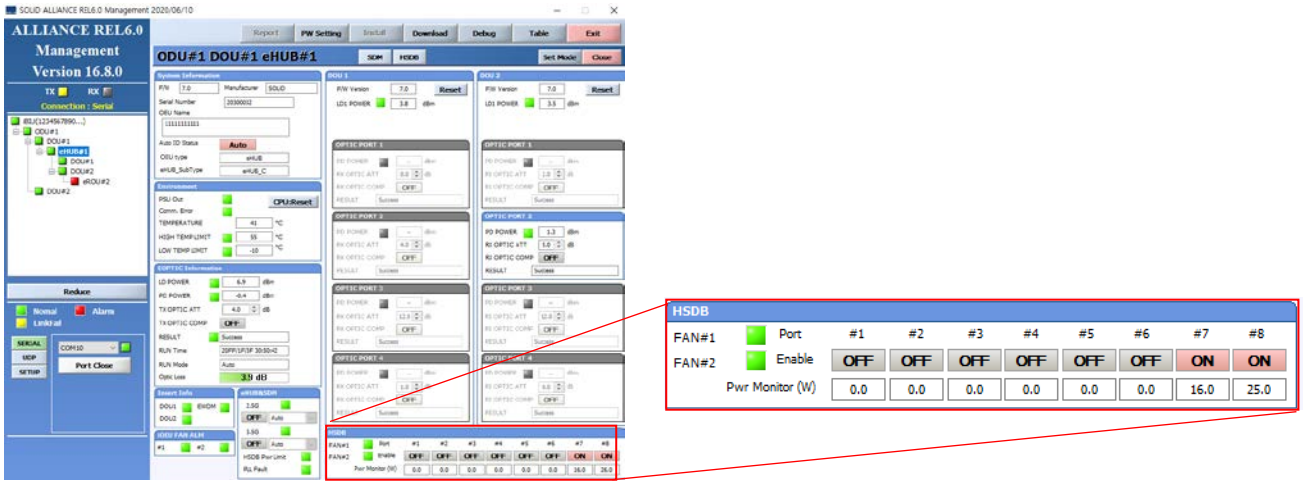
** There are no hot swap function. Please turn off the HSDB port (refer to bellow)