# ALLIANCE HROU_4000_2540

## User Manual

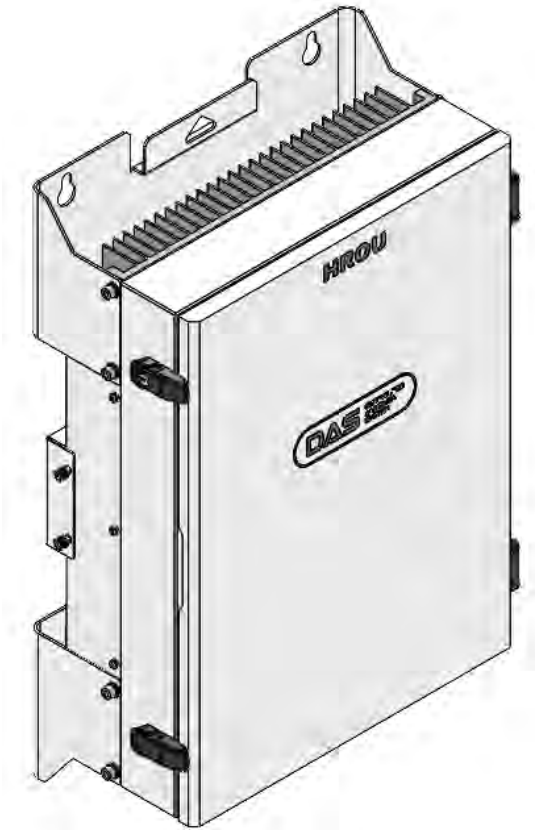


**Document Reference:**

| | |
|---|---|
| Version: | V1.0 |
| Document Status: | Release 1 |
| Issue Date: | August 26, 2022 |
| Author: | Yong Hee Kim |
| Department: | Alliance Development Team |
| Authorizing Manager: | Hyun Seok Chae |

# REVISION HISTORY

| Version | Issue Date | No. of Pages | Initials | Details of Revision Changes |
|---|---|---|---|---|
| V 1.0 | Aug. 26, 2022 | | Original | |
| | | | | |
| | | | | |
| | | | | |
| | | | | |
| | | | | |
| | | | | |
| | | | | |
| | | | | |
| | | | | |
| | | | | |
| | | | | |

**Technical Support**

SOLiD serial numbers must be available to authorize technical support and/or to establish a return authorization for defective units. The serial numbers are located on the back of the unit, as well as on the box in which they were delivered. Additional support information may be obtained by accessing the SOLiD Tehcnology, Inc. website at www.solid.co.kr or sending an email at sjkim@solid.co.kr

This manual is produced by Global Business Division Team and printed in Korea.

# Contents


*Section1 Safety & Certification Notice* ..... *5*

*Section2 System Configuration and Functions* ..... *9*

**2.1 High power 5G Remote** ..... **9**

**2.1.1 Specifications of HROU** ..... 10

**2.1.2 Block Diagram of HROU_4000_2540** ..... 12

**2.1.2.1 HROU_4000_2540 block diagram** ..... 12

**2.1.2.2 HROU_4000_2540 internal Structure** ..... 14

**2.1.2.3 HROU part list** ..... 14

**2.1.3 Function by unit** ..... 16

**2.1.3.1 High Remote Drive Unit (HRDU)** ..... 16

**2.1.3.2 Remote Power Supply Unit (RPSU)** ..... 17

**2.1.3.3 Remote Optic (HROPTIC_4000_2L)** ..... 18

**2.1.3.4 HROU_4000_DTU** ..... 18

**2.1.3.5 Multiplexer** ..... 19

**2.1.4 Bottom of HROU_4000_2540** ..... 20

**2.1.4.1 Functions** ..... 20

*Section3 System Installation* ..... *22*

**3.1 HROU_4000_2540 Installation** ..... **22**

**3.1.1Tools** ..... **22**

**3.1.2HROU_4000_2540 Enclosure installation** ..... **22**

**3.1.3HROU_4000_2540 Wall Mount Installation** ..... **24**

**3.1.4HROU_4000_2540 components** ..... **25**

**3.1.5HROU_4000_2540 Power Cabling** ..... **26**

**3.1.6HROU_4000_2540 Ground cabling** ..... **27**

**3.1.7HROU_4000_2540 Optical Cable** ..... **30**

**3.1.8Mounting of HRDU_4000** ..... **31**

**3.1.9Replacing a FAN Unit** ..... **32**

# Contents of Figure

Figure 1. HROU_4000_2540 2-port Antenna External Appearance ..... 9
Figure 2. HROU_4000_2540 4-port Antenna External Appearance ..... 10
Figure 3. HROU_4000_2540 2-port Antenna Block diagram ..... 12
Figure 4. HROU_4000_2540 4-port Antenna Block diagram ..... 13
Figure 5. Inside of Remote Unit ..... 14
Figure 6. HRDU External Appearance ..... 16
Figure 7. AC-DC RPSU External Appearance ..... 17
Figure 8. DC-DC RPSU External Appearance ..... 17
Figure 9. ROPTIC External Appearance ..... 18
Figure 10. HROU_4000_DTU External Appearance ..... 19
Figure 11. Multiplexer External Appearance ..... 19
Figure 12. HROU_4000_2540 2-port Antenna Bottom Appearance ..... 20
Figure 13. HROU_4000_2540 4-port Antenna Bottom Appearance ..... 20
Figure 14. How to install HROU_4000_2540 ..... 23
Figure 15. Dimension used to install HROU_4000_2540 on the WALL ..... 24
Figure 16. Procedures of installation ..... 25
Figure 17. How to install power cable ..... 27
Figure 15. Location of Ground Terminal ..... 28
Figure 16. Terminal Information ..... 28
Figure 17. How to install Ground Terminal ..... 29
Figure 18. Location of Optical Connector ..... 30
Figure 19. How to install Optical cable ..... 30
Figure 20. Location of each module in the HROU_4000_2540 ..... 31
Figure 21.How to mount HRDU ..... 32
Figure 22. How to change fan units ..... 32

# Section1

## Safety & Certification Notice

**"Only qualified personnel should handle the DAS equipment. Any person involved in installation or service of the DAS should understand and follow these safety guidelines."**

- Obey all general and regional installation and safety regulations relating to work on high voltage installations, as well as regulations covering the correct use of tools and personal protective equipment.

- The power supply unit in repeaters contains dangerous voltage levels, which can cause electric shock. Switch the mains off prior to any work in such a repeater. Any local regulations are to be followed when servicing repeaters.

- When working with units outdoors, make sure to securely fasten the door or cover in an open position to prevent the door from slamming shut in windy conditions.

- Use this unit only for the purpose specified by the manufacturer. Do not carry out any modifications or fit any spare parts which are not sold or recommended by the manufacturer. This could cause fires, electric shock, or other injuries.

- Do not operate this unit on or close to flammable materials, as the unit may reach high temperatures due to power dissipation.

- Do not use any solvents, chemicals, or cleaning solutions containing alcohol, ammonia, or abrasives on the DAS equipment. Alcohol may be used to clean fiber optic cabling ends and connectors.

- To prevent electrical shock, switch the main power supply off prior to working with the DAS System or Fiber BDA. Never install or use electrical equipment in a wet location or during a lightning storm.

- Do not look into the ends of any optical fiber or directly into the optical transceiver of any digital unit. Use an optical spectrum analyzer to verify active fibers. Place a protective cap over any radiating transceiver or optical fiber connector to avoid the potential of radiation exposure.

- Allow sufficient fiber length to permit routing without severe bends.

- For pluggable equipment, make sure to install the socket outlet near the equipment so that it is easily accessible.

- A readily accessible disconnect device shall be incorporated external to the equipment.

- The power of this system shall be supplied through wiring installed in a normal building.

If powered directly from the mains distribution system, it shall be used with additional protection, such as an overvoltage protection device

- Only 50 ohm rated antennas, cables, and passive equipment shall be used with this remote. Any equipment attached to this device not meeting this standard may cause degradation and unwanted signals in the bi-directional system. All components connected to this device must operate in the frequency range of this device.

- Only 50 ohm rated antennas, cables, and passive components operating from 150 - 4 GHz shall be used with this device.

- The head end unit must always be connected to the Base Station using a direct cabled connection. This system has not been approved for use with a wireless connection via server antenna to the base station.

- Fuses : replaceable by skilled person

  (component ID: F1, F2), Ratings (10 A), "Ratings (100/240VAC T10A H)", and (symbol of required characteristics) located on or adjacent to fuse in service manual. Fuses (F1, F2) located in Line and Neutral.

  CAUTION: Double pole, neutral fusing. Disconnect mains before servicing.

  ATTENTION. Double pôle/fusible sur le neutre. Débrancher l'alimentation avant l'entretien.

- RAL (RESTRICTED ACCESS AREA)

  "Equipment is intended for installation in Restricted Access Area" (Instruction)/"Les matériels sont destinés à être installés dans des EMPLACEMENTS À ACCÈS RESTREINT" (Instruction)

- Earthing LUG

  Wire M6 STUD/AWG#6, Lug M6/JOCT-0202-RS06 CCN ZMVV

  Shall specify installation wire 1015/16AWG, connection to lug terminals (tooling) and specific lug terminals (M6/Tongue form: Round type, Barrel form: Standard barrel type, Listed (ZMVV)) including appropriate torque values for connection to terminals.

- Access can only be gained by SERVICE PERSONS or by USERS who have been instructed about the reasons for the restrictions applied to the location and about any precautions that shall be taken; access is through the use of a TOOL or lock and key, or other means of security, and is controlled by the authority responsible for the location.

- Notice! Be careful not to touch the Heat-sink part due to the high temperature.

- Signal booster warning label message should include

**WARNING**. This is **NOT** a **CONSUMER** device. It is designed for installation by **FCC LICENSEES** and **QUALIFIED INSTALLERS**. You **MUST** have an **FCC LICENSE** or express consent of an FCC Licensee to operate this device. Unauthorized use may result in significant forfeiture penalties, including penalties in excess of $100,000 for each continuing violation.

- Certification

- FCC: This equipment complies with the applicable sections of Title 47 CFR Parts 15, 27
  - Use of unauthorized antennas, cables, and/or coupling devices not conforming with ERP/EIRP and/or indoor-only restrictions is prohibited.
  - Home/personal use is prohibited.
- UL/CUL: This equipment complies with UL and CUL 62368 Standard for safety for information technology equipment, including electrical business equipment
- FDA/CDRH: This equipment uses a Class 1 LASER according to FDA/CDRH Rules. This product conforms to all applicable standards of 21 CFR Chapter 1, Subchapter J, Part 1040

### FCC Part 15.105 statement

This equipment has been tested and found to comply with the limits for a Class A digital device, pursuant to part 15 of the FCC Rules. These limits are designed to provide reasonable protection against harmful interference when the equipment is operated in a commercial environment. This equipment generates, uses, and can radiate radio frequency energy and, if not installed and used in accordance with the instruction manual, may cause harmful interference to radio communications. Operation of this equipment in a residential area is likely to cause harmful interference in which case the user will be required to correct the interference at his own expense.

### FCC Part 15.21 statement

Any changes or modifications not expressly approved by the party responsible for compliance could void the user's authority to operate this equipment.

## RF Exposure Statement

This device must be professionally installed. The antenna(s) must be installed such that a minimum separation distance of at least 5.8 m is maintained for outdoor use [e.g. Rooftop of the building, antenna gain : SISO (12 dBi), MIMO (15 dBi)] and a minimum separation distance of at least 60 cm is maintained for indoor use [antenna gain considering the cable loss : SISO (-16 dBi), MIMO (-13 dBi)] between the radiator (antenna) and all persons at all times . This device must not be co-located or operating in conjunction with any other antenna or transmitter.

# Section2

## System Configuration and Functions

### 2.1 High power 5G Remote

HROU_4000_2540 is a remote unit supporting both SISO and MINO service of C-Band and 2500 TDD band. HROU_4000_2540 receives TX optical signals from ODU and converts them into RF signals. The converted RF signals are amplified through high-power amps in the corresponding HRDU bands combined with UDCU, PAU, and Cavity duplexer, and then radiated to the antenna port.

When receiving RX signals through the antenna port, this unit filters out-of-band signals in a corresponding HRDU and sends the results to R-OPTIC to make an electronic-to-optical conversion. After conversion, the signals are sent to the upper device of ODU. HROU_4000_2540 can be equipped with up to four HRDUs (High Remote Drive Unit) and each module supports a single band only.

HROU_4000_2540 has a digital board to improve the PAU's linearity by performing DPD (Digital Pre-Distortion). Also, CFR works to improve the PAPF performance. Since C-Band and 2500 TDD band uses TDD technology, the digital board of HROU is also equipped with the SDM to acquire the synchronization for 5G NR TDD signals.

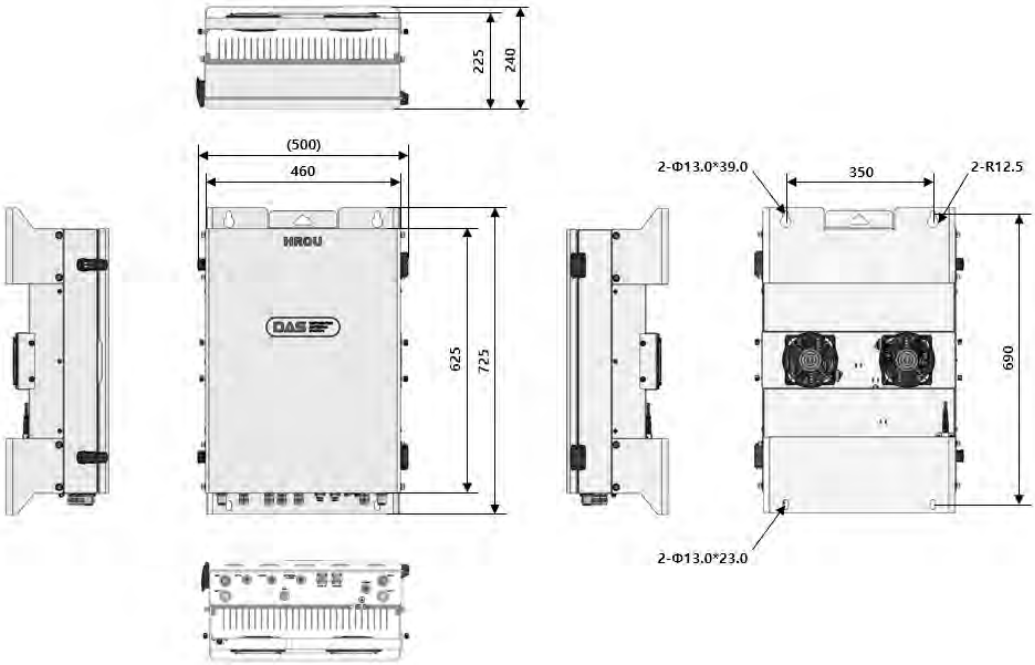


**Figure 1. HROU_4000_2540 2-port Antenna External Appearance**

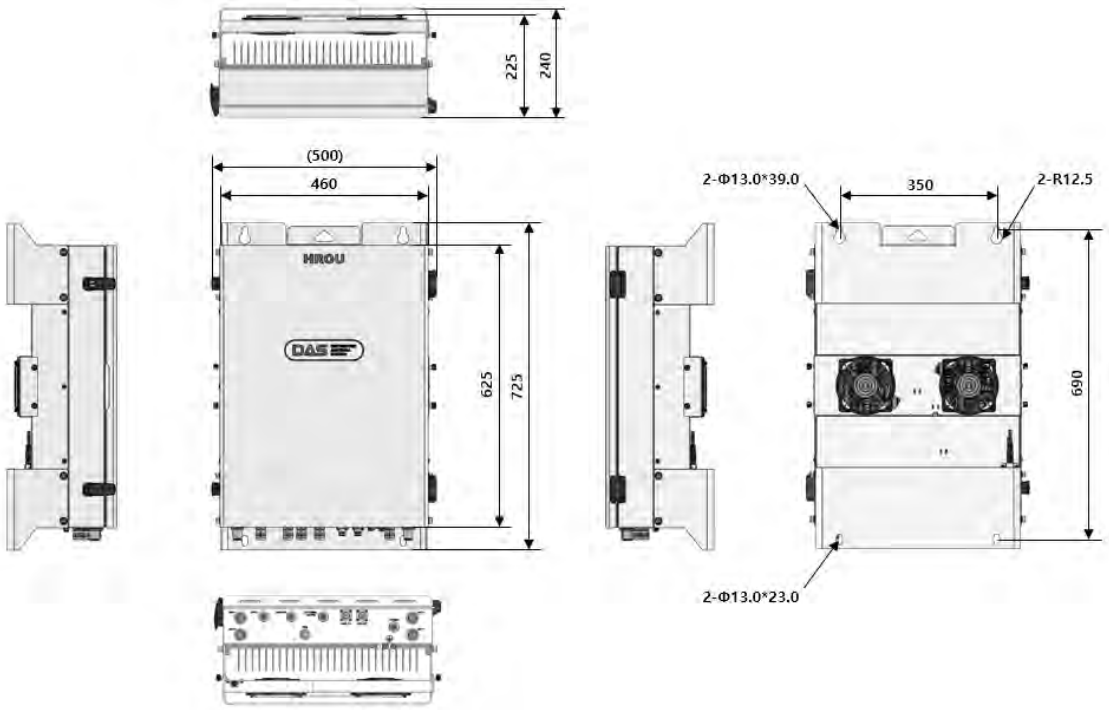


**Figure 2. HROU_4000_2540 4-port Antenna External Appearance**

### 2.1.1 Specifications of HROU

| Item | Spec. | | | Remark |
|---|---|---|---|---|
| | HROU_4000_2540 | | | |
| The nominal bandwidth | C-Band | | 280MHz | 3700 - 3980MHz |
| | 2500 TDD | | 194MHz | 2496 - 2690MHz |
| Input power | TX | | LPOI : -10 - 20dBm | Each port |
| | | | HPOI : +15 – 43dBm | |
| | RX | | HROU : -50dBm | |
| Output power | TX | HRDU_25_25_S<br>HRDU_25_25_M | +43dBm ± 1dB | 20 / 40 / 60 / 80 / 100MHz |
| | | HRDU_Cband_R<br>HRDU_Cband_M_R | +45dBm ± 1dB | 20 / 40 / 60 / 80 / 100MHz<br>100+80+60+40MHz |
| | RX | | -23dBm ± 1dB | |
| System gain | TX | HRDU_25_25_S<br>HRDU_25_25_M | 63dB | 20 / 40 / 60 / 80 / 100MHz |

| | | | | |
|---|---|---|---|---|
| | | HRDU_Cband_R<br>HRDU_Cband_M_R | 65dB | 20 / 40 / 60 / 80 / 100MHz<br>100+80+60+40MHz |
| | RX | | 27dB | 25dB Gain control |
| **Spurious emissions** | SISO system | | ≤ -13dBm | |
| | MIMO system | | ≤ -13dBm<br>@ summing emissions | **Note 1 |
| **VSWR** | 1.69:1 typical, 1.80:1 max. | | | |
| **Input/ Output Impedance** | 50 ohm | | | |
| **External alarm interface** | 5pin connector on the bottom panel | | | |
| **Optical connector** | SC/APC, step Ferrule, waterproof,<br>single mode fiber | | | |
| **Craft port** | Serial interface RS-232 9 pin D-sub male | | | |
| **Monitoring port** | -40dB(±3dB), SMA female, TX output Only | | | |
| **Weight** | 88 lbs. (40 Kg) max (fully loaded) | | | Common Part<br>(R-optic, DPD Board) |
| **Power consumption** | 120W | | | |
| **Temperature range** | -25°C to +55°C/ -13 to 131°F | | | Ambient Temperature |
| **Humidity range** | 0% ~ 90% | | | Non-condensing |
| **Ingress protection** | UL Type 4X | | | |
| **Sealing (Remote Unit)** | IEC 60 529 EN 60 529 | | | IP66 Complaint |
| **Size(mm)** | 28.5“ x 19.7“ x 9.5“ (725 x 500 x 240mm) | | | Including Bracket |

**Note1 - Summing emissions: The FCC’s emission limit applies to the total emissions from all outputs of the transmitter of composite system transmitters. Thus, emission measurements from the transmitter outputs must be summed before comparing measured emissions to the emission limit. (KDB 662911)

### 2.1.2 Block Diagram of HROU_4000_2540

#### 2.1.2.1 HROU_4000_2540 block diagram

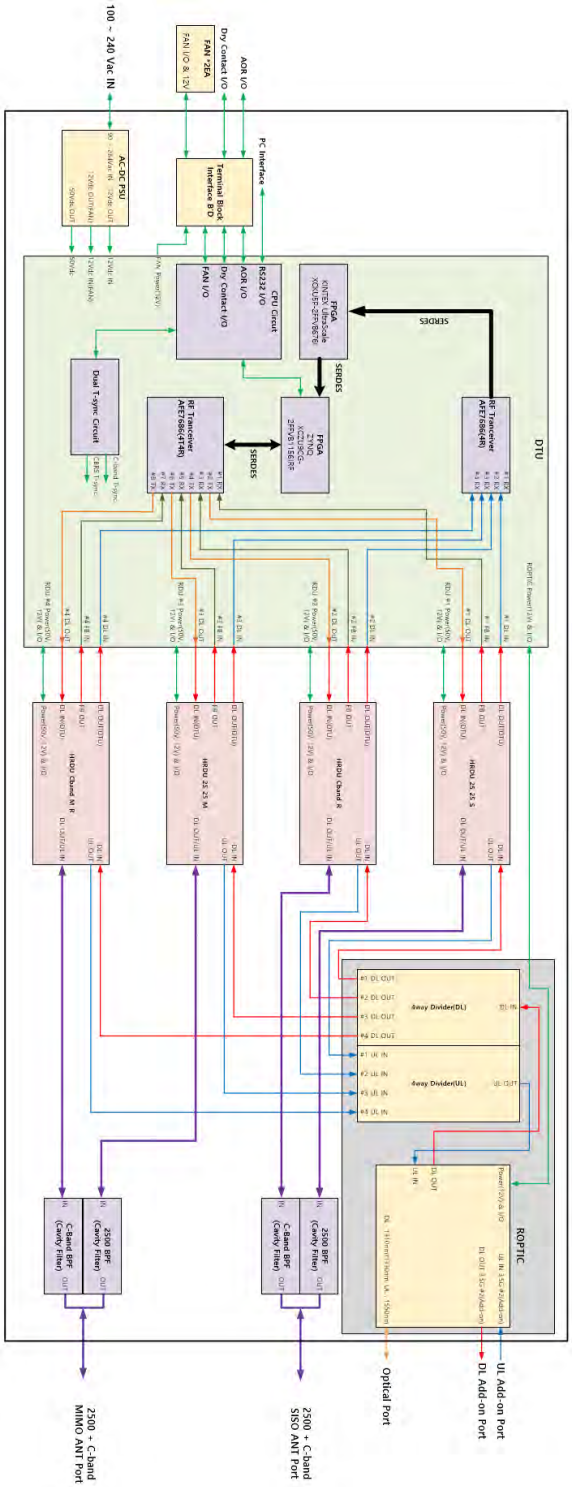


**Figure 3. HROU_4000_2540 2-port Antenna Block diagram**

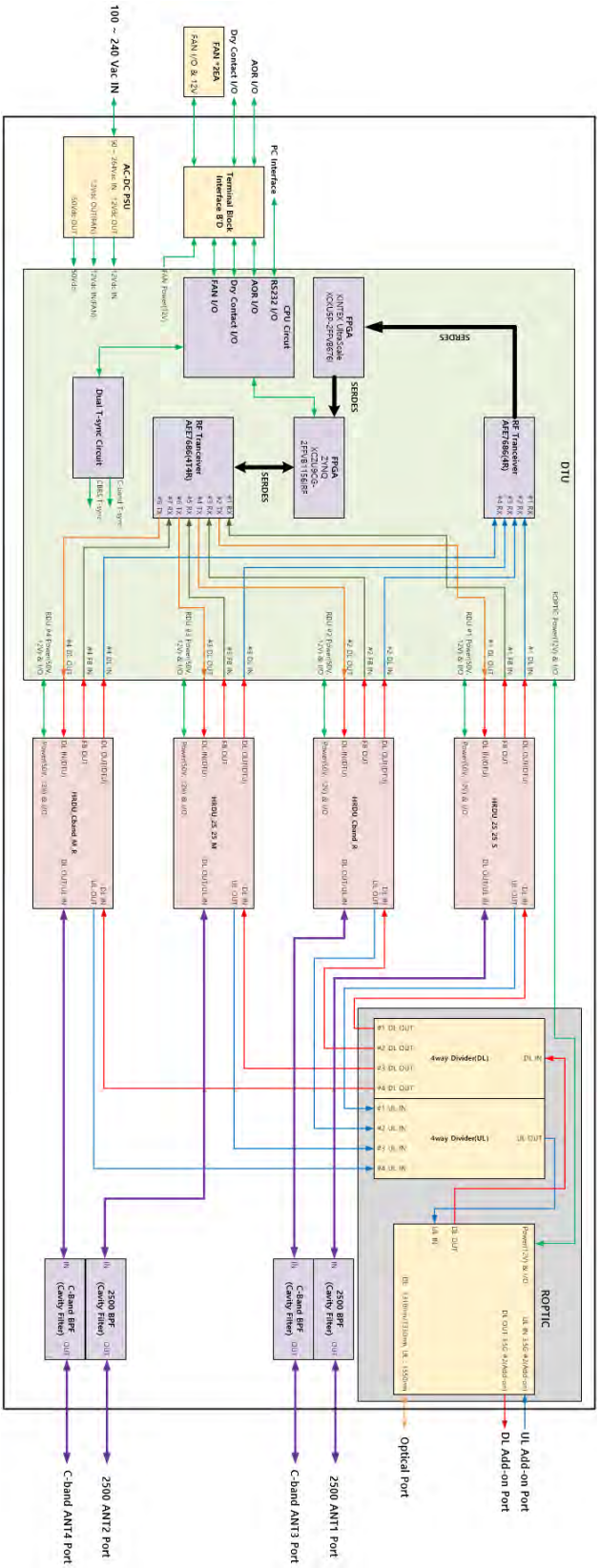


**Figure 4. HROU_4000_2540 4-port Antenna Block diagram**

### 2.1.2.2 HROU_4000_2540 internal Structure

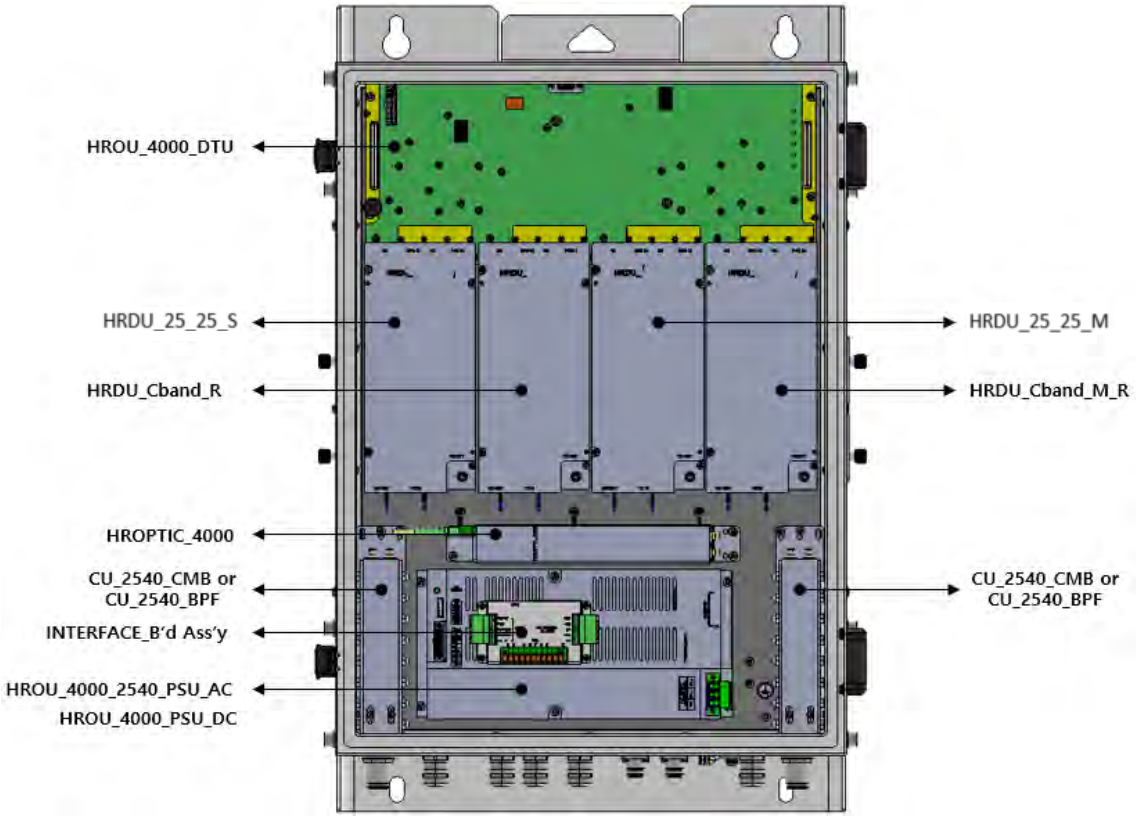


**Figure 5. Inside of Remote Unit**

### 2.1.2.3 HROU part list

| No. | Unit | Description | Remark |
|---|---|---|---|
| 1 | HRDU X4 | **High Remote Drive Unit**<br>Consists of UDCU and PAU<br>Filters and amplifies TX signals;<br>Filters and amplifies RX signals in low noise amplifier; | Optional<br>Max 4 |
| 2 | HROU_4000_2540_PSU (AC) | **Remote Power Supply Unit**<br>Input power: 100~240VAC<br>Output power: +50, +12V, VDC | |
| | HROU_4000_PSU (DC) | **Remote Power Supply Unit**<br>Input power: -48 VDC<br>Output power: +50, +12V, VDC | |

| | | | |
|---|---|---|---|
| 3 | HROPTIC_4000_2L | **Remote Optic**<br>Makes RF conversion of TX optical signals;<br>Converts RX RF signals into optical signals;<br>Compensates optical loss;<br>5dBo optical link between ODU(OM4) and ROU;<br>10dBo optical link between ODU(OM1) and ROU;<br>Fiber Connector: SC/APC Connector;<br>Optical Wavelength: 1310/1330/1550 WDM;<br>Communicates with BIU/OEU through the FSK modem | |
| 4 | HROU_4000_DTU | **Remote Central Processor & Digital signal processor Unit**<br>Controls signal of each unit;<br>Monitors BIU/ODU/OEU status through FSK modem communication;<br>Performs DPD to improve the PAU efficiency;<br>CFR is a technique used to reduce the PAPR of the transmitted signals;<br>Acquires the synchronization for 5G NR TDD signals | |
| 5 | CU_2540_CMB | **Multiplexer**<br>This integrated combiner unit combines C-band and 2500 TDD for the output to a single antenna connection. | |
| 6 | CU_2540_BPF | **Band pass filter**<br>This cavity filter provides antenna ports for both 2500 MHz and C-band. | |
| 7 | Enclosure | Enclosure to satisfy NEMA4 (IP66);<br>UL Type 4X<br>Wall mounting type (Vertical Mount)<br>FAN | |
| 8 | Interface board Ass’y | External alarm interface<br>FAN interface | |

### 2.1.3 Function by unit

#### 2.1.3.1 High Remote Drive Unit (HRDU)

When receiving TX signals from each band through Remote Optic, HRDU filters the signals and amplifies them with High Power Amplifier. The unit also filters RX signals given through a cavity filter and amplifies them to send the signals to Remote Optic. In the unit, there is ATT to adjust the gain. An HRDU consists of a UDCU and a PAU like the below figure and all modules are merged into one package.

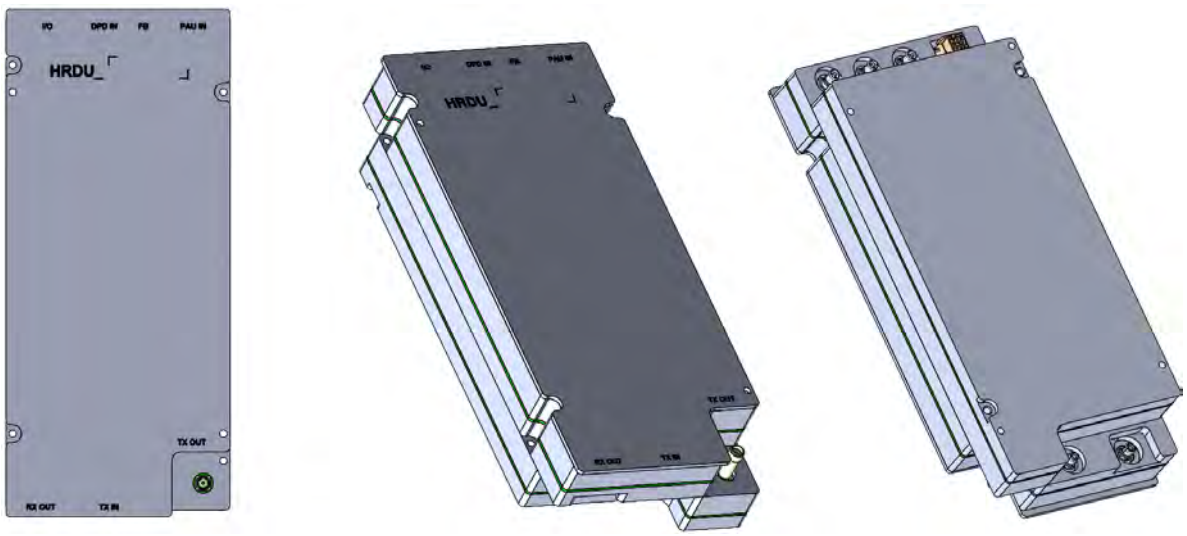


**Figure 6. HRDU External Appearance**

HRDU devices are varied by each frequency band, including the following:

| No | Unit Naming | Description | Frequency (Bandwidth ) | |
|---|---|---|---|---|
| | | | TX | RX |
| 1 | HRDU_Cband_R | Single band | 3700 – 3980MHz | |
| 2 | HRDU_Cband_M_R | Single band | 3700 – 3980MHz | |
| 3 | HRDU_25_25_S | Single band | 2496 – 2690MHz | |
| 4 | HRDU_25_25_M | Single band | 2496 – 2690MHz | |

### 2.1.3.2 Remote Power Supply Unit (RPSU)

There are 2 types of RPSU in the HROU to supply active modules in the enclosure and receive power from the external.

They are the DC/DC PSU receiving input -48V and the AC/DC PSU receiving input 110V/220V from external.

RPSU has a circuit brake to turn the power ON/OFF and has an LED indicator at the top to check if the input power is normally supplied.

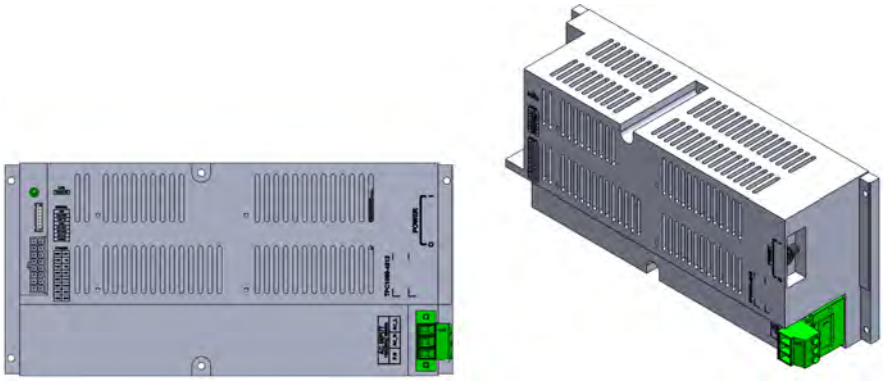

**Figure 7. AC-DC RPSU External Appearance**

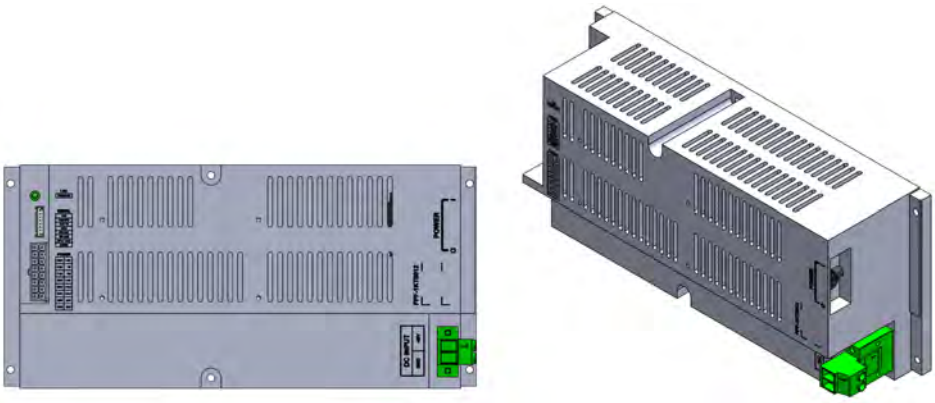

**Figure 8. DC-DC RPSU External Appearance**

Functions:

- Provides a circuit breaker to turn the AC power ON/OFF
- Provides DC power to DPD board, HROPTIC_4000, HRDU, and FAN Unit
- LED indicators to show the alarm status of the PSU

---

Caution

DOUBLE POLE/NEUTRAL FUSING

---

### 2.1.3.3 Remote Optic (HROPTIC_4000_2L)

Remote Optic converts optical signals into RF signals and performs vice versa. It also has internal ATT for optical compensation to compensate for optical cable loss. It provides two paths in pairs (TX/RX) to transport RF signal to ADD On port.

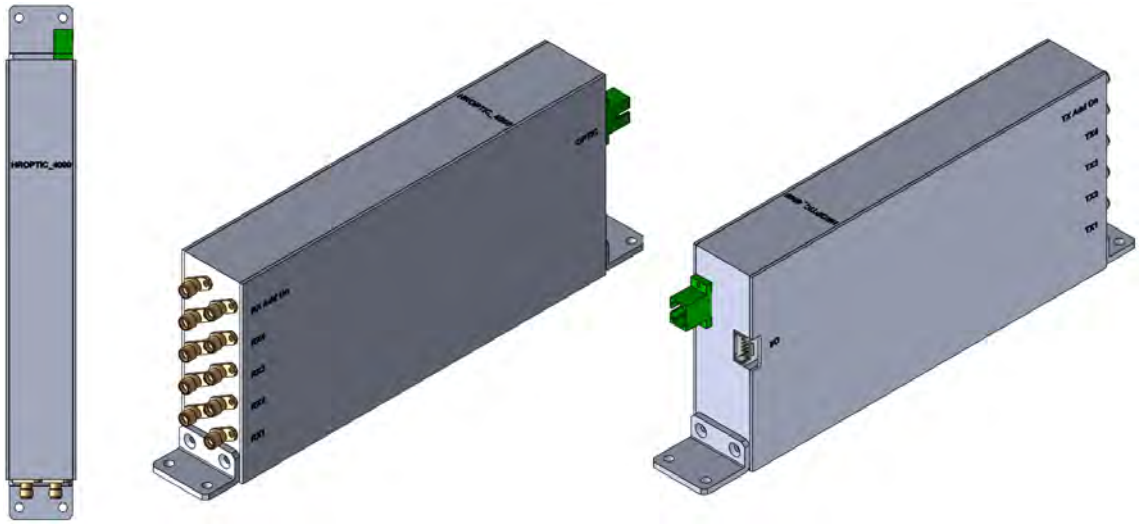

**Figure 9. ROPTIC External Appearance**

### 2.1.3.4 HROU_4000_DTU

**Remote Central Processor Unit (RCPU)**

HROU_4000_DTU can monitor and control each module of HROU_4000_2540. This unit receives and analyzes upper communication data from Remote Optic and reports the unit's value to upper devices.

On the front of the module, it has LED indicators to show system status, letting you check any abnormalities at a time. On the same front, it also has communication LED Indicators to show communication status with upper devices. Through the local port, the unit enables you to check and control device status through a PC or laptop.

**Digital transmission Unit (DTU)**

HROU_4000_DTU performs DPD to improve the HRDU PAU efficiency. Also, CFR is used in DTU as a technique to reduce the PAPR of the transmitted signal. HROU_4000_DTU also acquires the synchronization for 5G NR TDD signals.

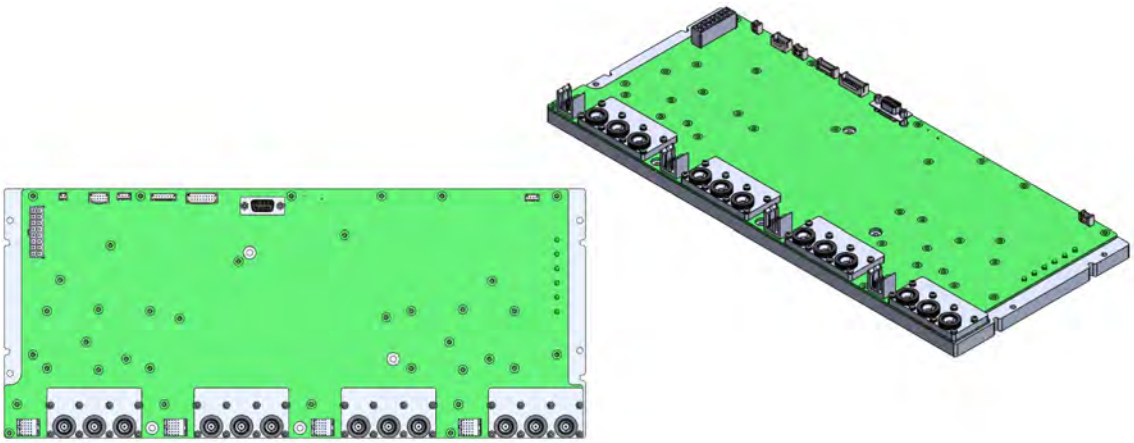

**Figure 10. HROU_4000_DTU External Appearance**

### 2.1.3.5 Multiplexer

A multiplexer is called a Combine Unit (CU) since it works as a module to combine or distribute multiple signals into one or two antennas. This device has a port to combine multiple signals. You need to connect the input and output ports of RDU to the corresponding port of the multiplexer.

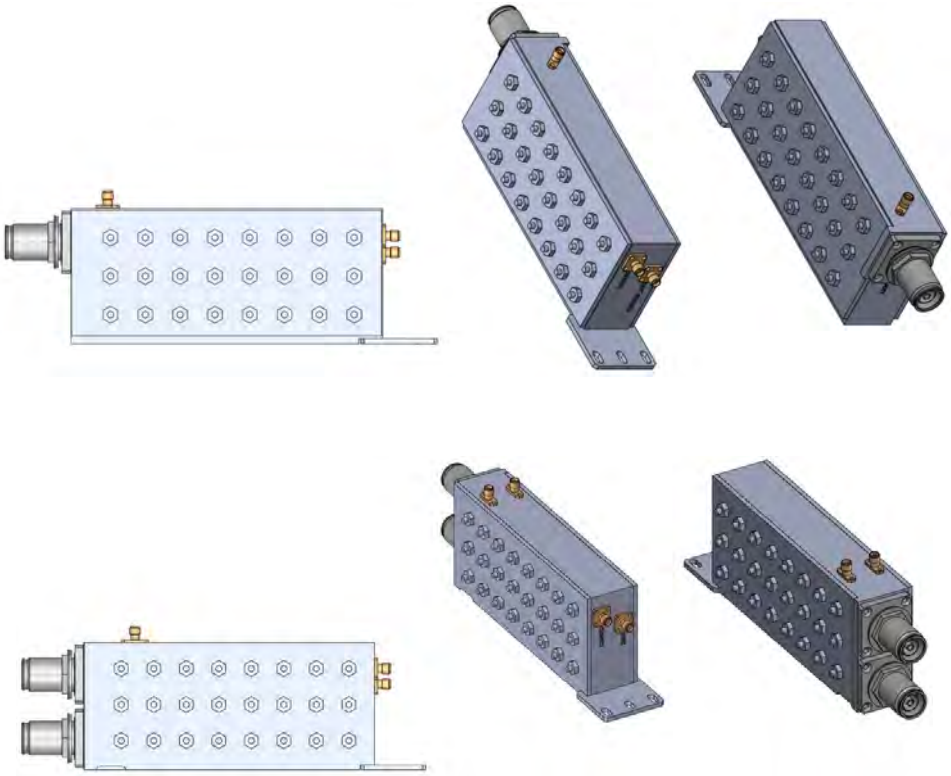

**Figure 11. Multiplexer External Appearance**

## 2.1.4 Bottom of HROU_4000_2540

### 2.1.4.1 Functions

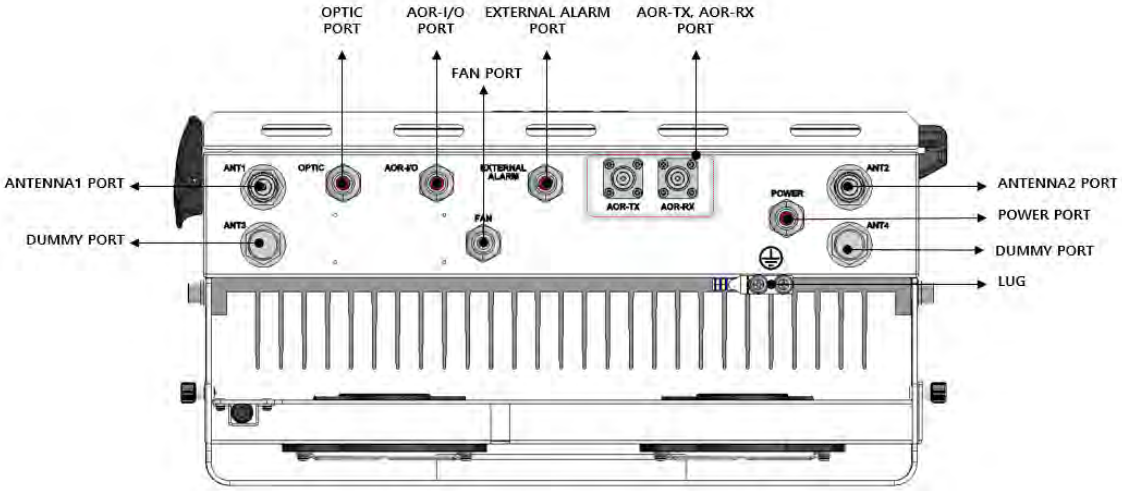


**Figure 12. HROU_4000_2540 2-port Antenna Bottom Appearance**

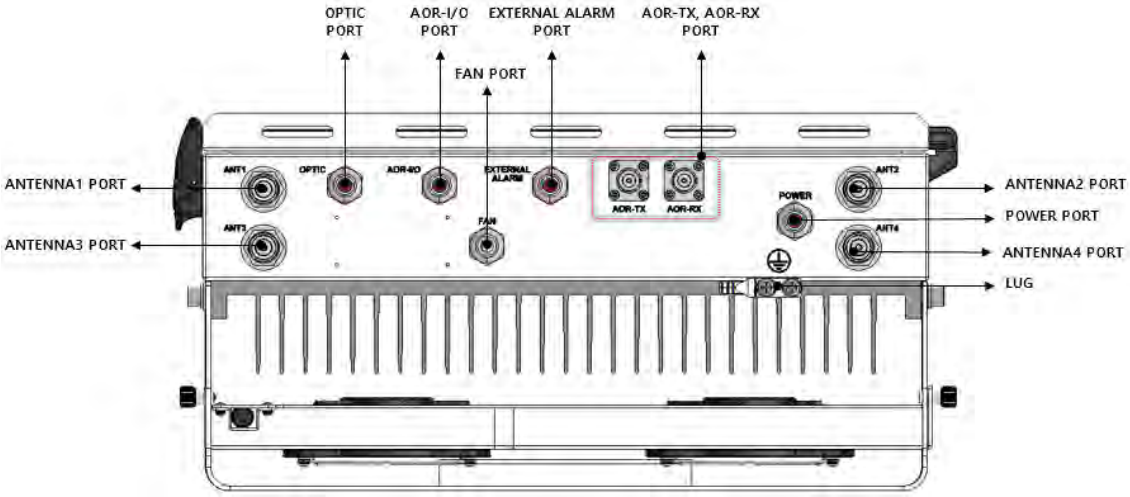


**Figure 13. HROU_4000_2540 4-port Antenna Bottom Appearance**

| No | Port | QTY | Remark |
|---|---|---|---|
| 1 | Optic Port | 1EA | SC/APC, Waterproof<br>Optic Input port |
| 2 | T/RX RF Port | 2EA | N Type-Female<br>Connected to transmit TX to AOR<br>and receive RX signals from ARU. |
| 3 | ANT1 | 1EA | DIN-type female_CU SISO port |
| 4 | ANT2 | 1EA | DIN-type female_CU MIMO port |
| 7 | Power IN | 1EA | Waterproof, AC Power IN or DC Power IN |
| 9 | FAN port | 1EA | Waterproof-Con |
| 10 | GND Lug Port | 1EA | Terminal for system ground |
| 11 | External Alarm Port | 1EA | Terminal for dry contact |
| 12 | I/O Port | 1EA | Port to communicate with AOR |

# *Section3* System Installation

## 3.1 HROU_4000_2540 Installation

This chapter describes how to install each unit and optical cable, along with the power cabling method. In detail, the chapter describes how to install shelves or enclosures of each unit, the power cabling method, and the optical cabling and RF interface. Furthermore, by showing the power consumption of modules installed in each unit, it presents the power cabling budget in a simple way. Then, how many components are required to install each unit and for the expansion is described in this chapter.

### 3.1.1 Tools

The tools needed for the installation are described in the table below.

| No | Tools | Q'ty | Specification | Remark |
|---|---|---|---|---|
| 1 | | 1 | + (crosshead), 3Ø<br>Length is more than 20mm | For fixing HRDU |
| 2 | | 1 | 22mm | To tighten the antenna port |
| 3 | | 1 | 8mm | To CU from HRDU |

### 3.1.2 HROU_4000_2540 Enclosure installation

HROU is designed to be water- and dirt-proof. The unit has the structure of a one-body enclosure. It satisfies water-proof and quake-proof standards equivalent to NEMA4 (IP66). HROU_4000_2540 can be attached using a wall-mountable bracket. HROU_4000_2540 can be mounted either on a wall or a pole.

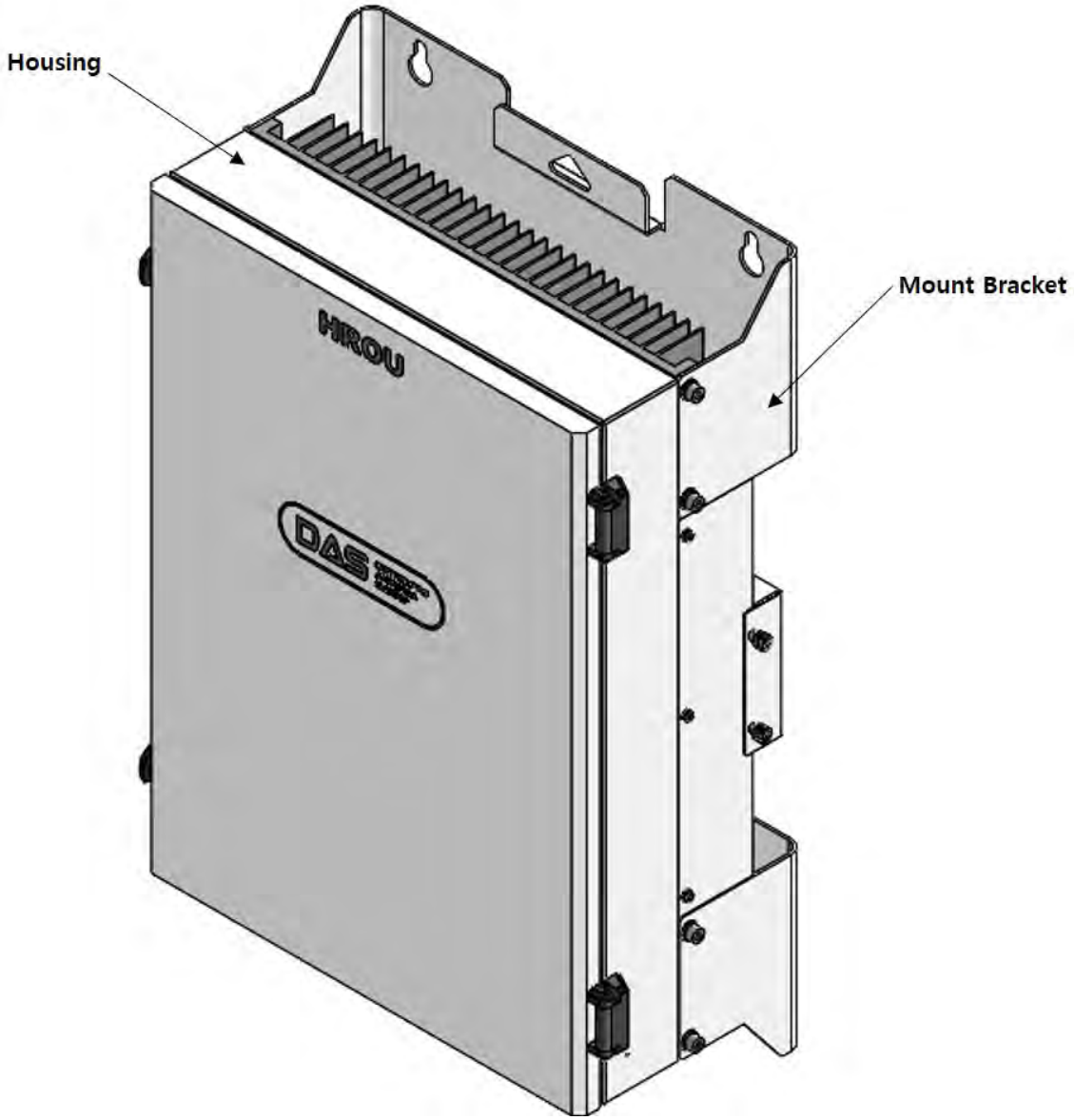


**Figure 14. How to install HROU_4000_2540**

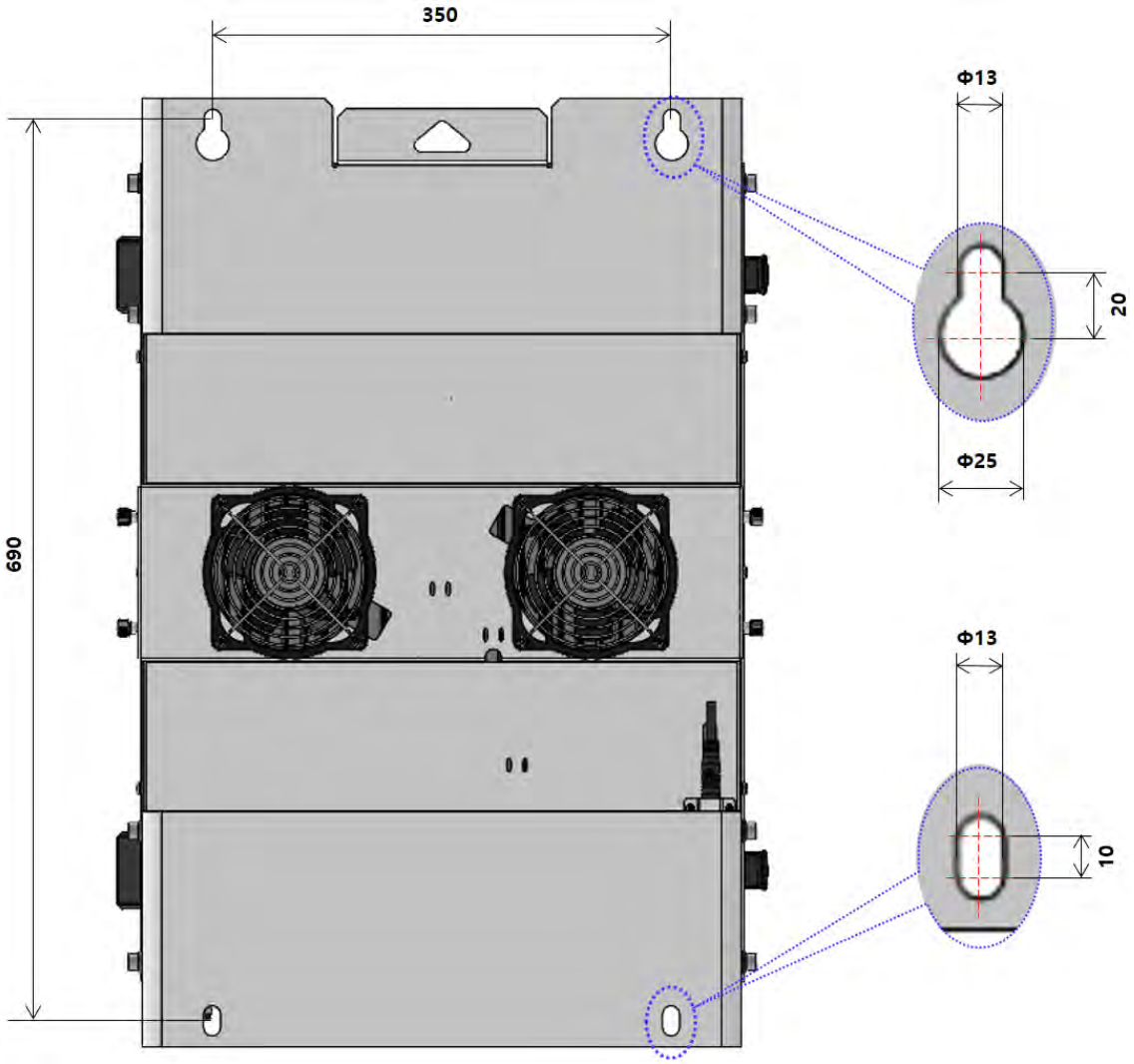


**Figure 15. Dimension used to install HROU_4000_2540 on the WALL**

### 3.1.3 HROU_4000_2540 Wall Mount Installation

HROU's installation bracket is attached to the enclosure when HROU is delivered. Users do not need to remove the bracket to install the enclosure. Simply secure four M12 mounting bolts tightly as the procedures below:

1. Install 2 of the M12 mounting bolts roughly halfway on the enclosure and install the enclosure over the bolts and secure the bolts tightly.
2. Install 2 of the M12 mounting bolts at the bottom of the enclosure and secure them tightly.

**Figure 16. Procedures of installation**

### 3.1.4 HROU_4000_2540 components

HROU_4000_2540 has the following components:

| No. | Unit | Description | Remark |
|---|---|---|---|
| Common Part | Enclosure | Including Wall mounting bracket | 1EA |
| | HROU_4000_DTU | - | 1EA |
| | HROPTIC_4000_2L | - | 1EA |
| | HROU_PSU | AC 110/220V or DC -48V | 1EA |
| | Interface_B'd Ass'y | FAN/External Alarm interface | 1EA |
| | FAN UNIT | 2 FANs are inside | 1EA |
| | CU_2540_CMB | - | 2EA |
| Optional Part | HRDU | HRDU_Cband_R, HRDU_Cband_M_R<br>HRDU_25_25_S, HRDU_25_25_M | Max 4EA |

The common part of HROU should have an enclosure and it is equipped with HROU_4000_DTU to inquire and control the state of each module, R_OPTIC to make both electronic-optical and optical-electronic conversions, and RPSU to supply power to HROU. HROU should have a power cable for the external rectifier or to supply the required power.

In addition, HRDU can be mounted and removed to provide service for the desired band.

### 3.1.5 HROU_4000_2540 Power Cabling

#### AC Power

HROU_4000_2540 supports 110V/220V as AC input power. Provided outside power cable is only one type with AWG#16. Power cable is provided without a power plug and it should be attached to a power plug based on the nation's power plug type.

The pinout description of the AC port is as below. You should connect the exact polarity of AC.

| Port outlook | Terminal block numbering | Name | Description |
|---|---|---|---|
| 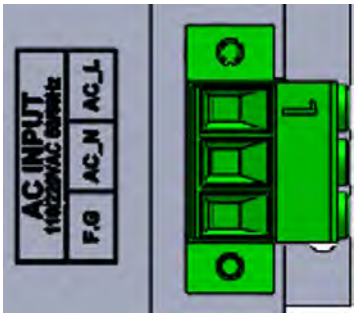 | 1 | AC_H | AC Hot |
| | 2 | AC_N | AC Neutral |
| | 3 | F.G | Frame Ground |

#### DC Power

HROU_4000_2540 supports only -48V as DC input power. Provided outside power cable is only one type.

The pinout description of the DC port is as below. You should connect the exact polarity of DC.

| Port outlook | MS Connector numbering | Name | Description |
|---|---|---|---|
| 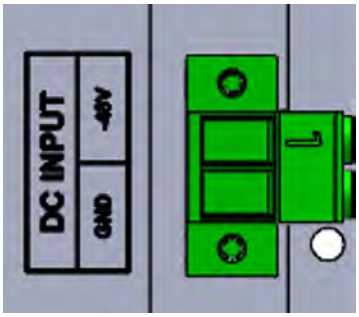 | 1 | -V | -48V |
| | 2 | GND | Ground |

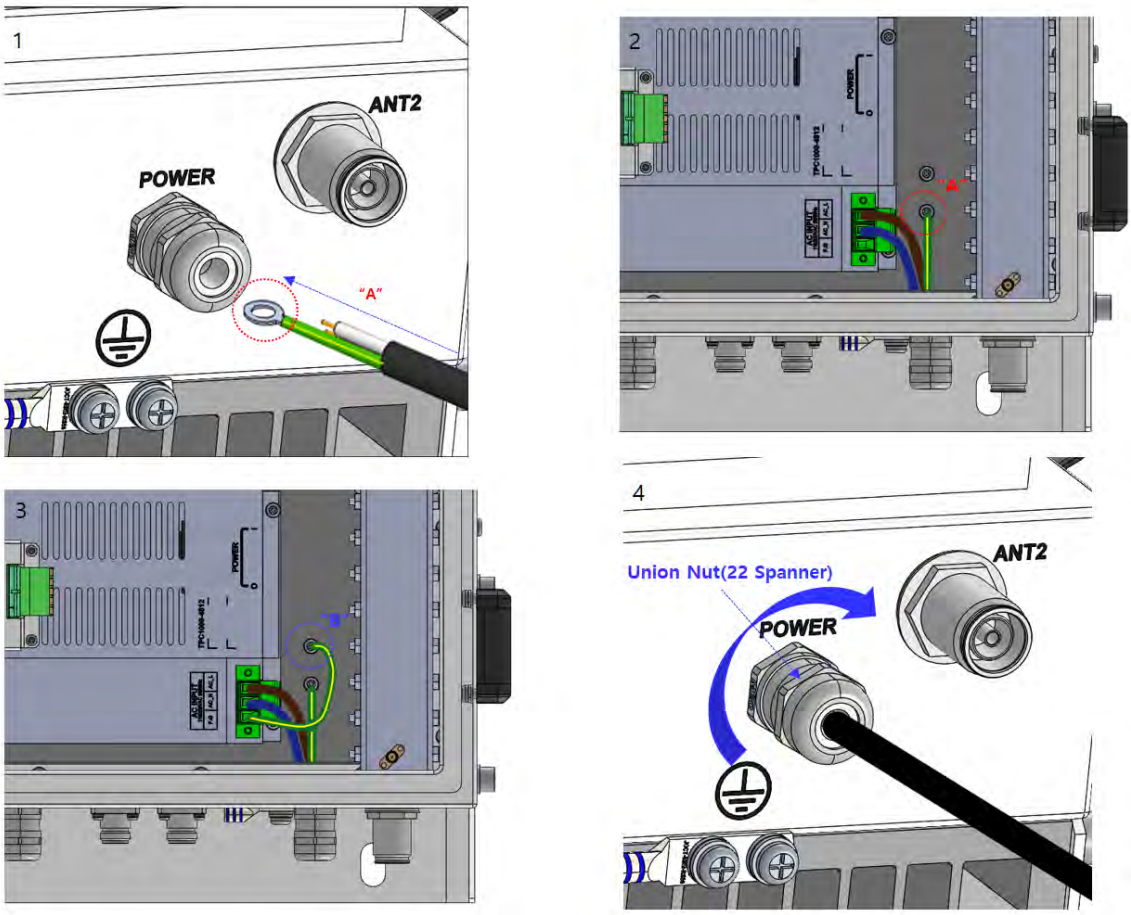


**Figure 17. How to install power cable**

Assembly sequence

1. Insert the power cable into the CABLE GLAND
2. Assembly as shown ("A"=M4 LUG)
3. As shown in the GrOUND CABLE graphic ("B"=M4 LUG)
4. Tighten CABLE GLAND NUT (Torque = 5.5N·m)

### 3.1.6 HROU_4000_2540 Ground cabling

The Grounding terminal is located at the bottom of the HROU enclosure, fixed by M6 screws. A compression terminal is attached already when is delivered. The recommended thickness of the cable is AWG#6 copper grounding wire.

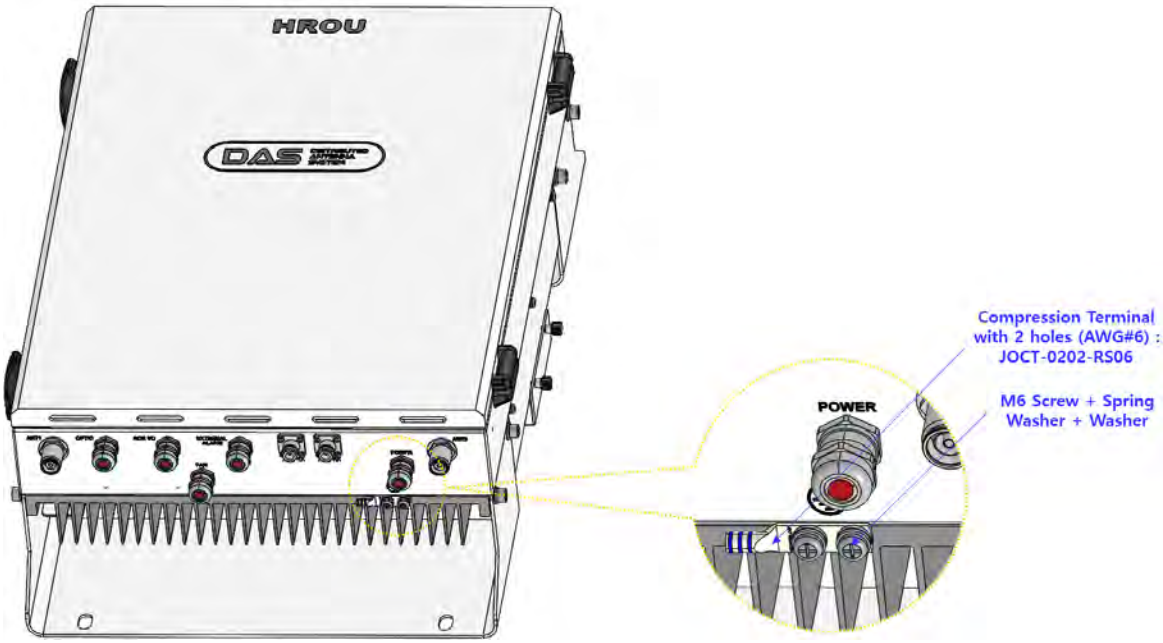


**Figure 18. Location of Ground Terminal**

The specification of the compression terminal is like the image below.

**CODE CONDUCTOR, TWO-HOLE, STANDARD BARREL AND LONG BARREL LUG TYPE-CT**

- Material : Electrolytic Copper (TPC)
- Surface : Tin Plated
- With Inspection Hole
- Color Coded to Show Proper Die Number and Color 10㎟~630㎟
- To IEC 60228 Class 2
- UL Listed 486A-486B up to 35KV

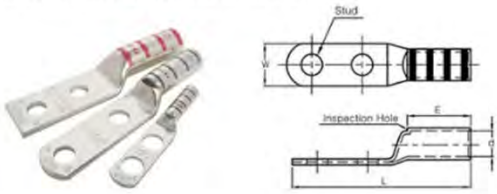


Part No Explation : JOCT 0201-X X 04 → Stud Size(mm, UNC)

Tongue Form R : Round Type
S : Square Type

Barrel Form *S : Standard Barrel Type
*L : Long Barrel Type

| Part Number | Wire Range | | Stud Size | Dimension (mm) | | | | | | | Color Code & Die No | Q'ty / bag |
|---|---|---|---|---|---|---|---|---|---|---|---|---|
| | | | | W | d | A | E | | L | | | |
| | AWG | ㎟ | | | | | *S | *L | *S | *L | | |
| JOCT 0201-XX05 | 8 | 10 | M5 | 9.5 | 4.7 | 16 | 15 | 30 | 52 | 67 | Red 21 JOCD-8 | 500 |
| JOCT 0201-XX06 | | | M6 | | | | | | | | | |
| JOCT 0201-XX08 | | | M8 | 15 | | 19 | | | 67 | 82 | | |
| JOCT 0201-XX10 | | | M10 | | | | | | | | | |
| JOCT 0201-XX12 | | | M12 | 18 | | 22 | | | 70 | 85 | | |
| JOCT 0202-XX05 | 6 | 16 | M5 | 12 | 5.4 | 16 | 15 | 30 | 52 | 67 | Blue 24 JOCD-6 | 300 |
| JOCT 0202-XX06 | | | M6 | | | | | | | | | |
| JOCT 0202-XX08 | | | M8 | 15.5 | | 19 | | | 67 | 82 | | |
| JOCT 0202-XX10 | | | M10 | | | | | | | | | |
| JOCT 0202-XX12 | | | M12 | 18 | | 22 | | | 70 | 85 | | |

**Figure 19. Terminal Information**

The required part number is JOCT 16-6 supporting AWG#6. The way to install the grounding cable complies with the below procedures.

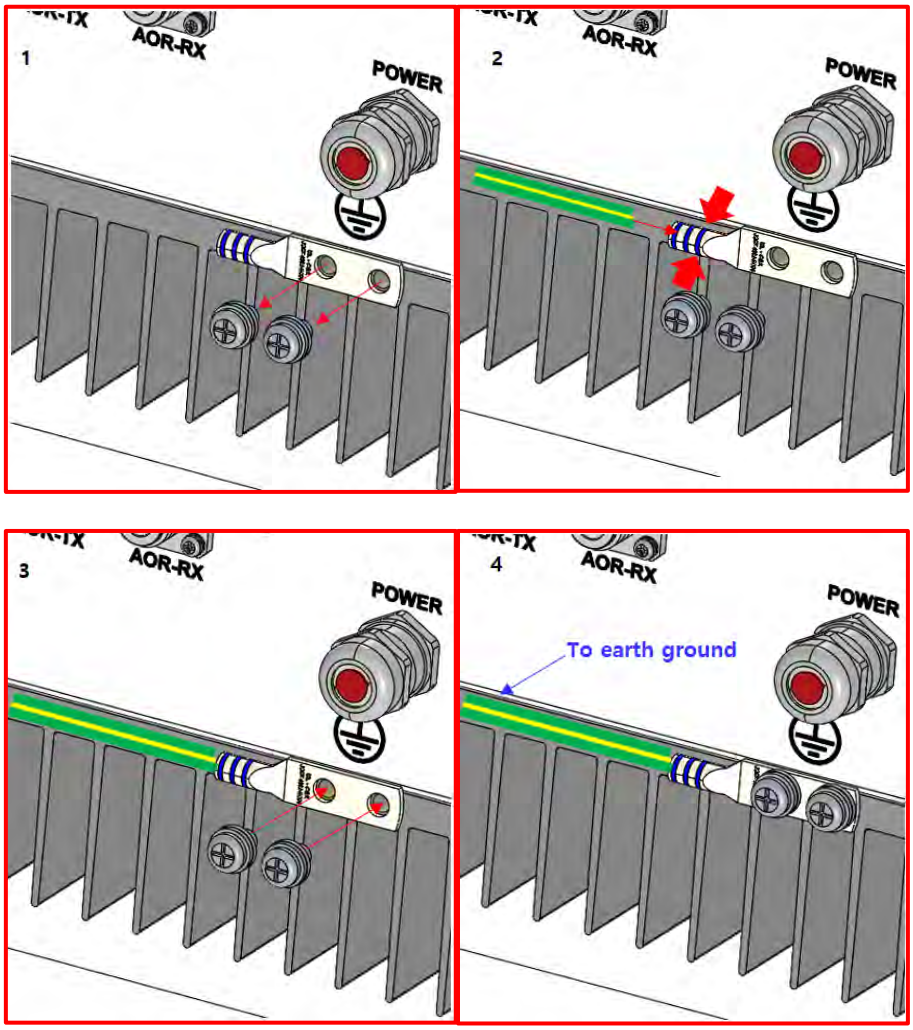


**Figure 20. How to install Ground Terminal**

The procedures are:

1. Loosen two M6 screws and then take the compression terminal off.
2. Insert an AWG#6 grounding wire into the terminal and then compress the terminal using a tool.
3. Assemble the terminal made in step 2 using two M6 screws.
4. Cut the ground wire to a proper length and connect it to the earth's ground source

   (A round terminal combined with the 16 mm²(6 AWG)-or-thicker wire is for the permanent grounding.)

### 3.1.7 HROU_4000_2540 Optical Cable

The Optical Connector is located at the bottom of the remote unit enclosure. An optical cable can be connected to the HROU by using connectors.

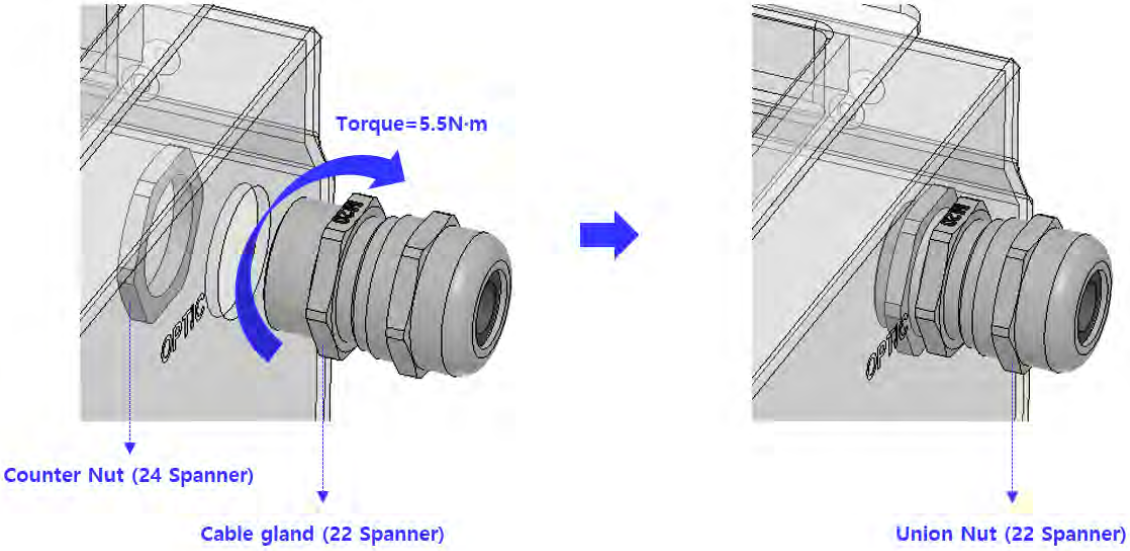


**Figure 21. Location of Optical Connector**

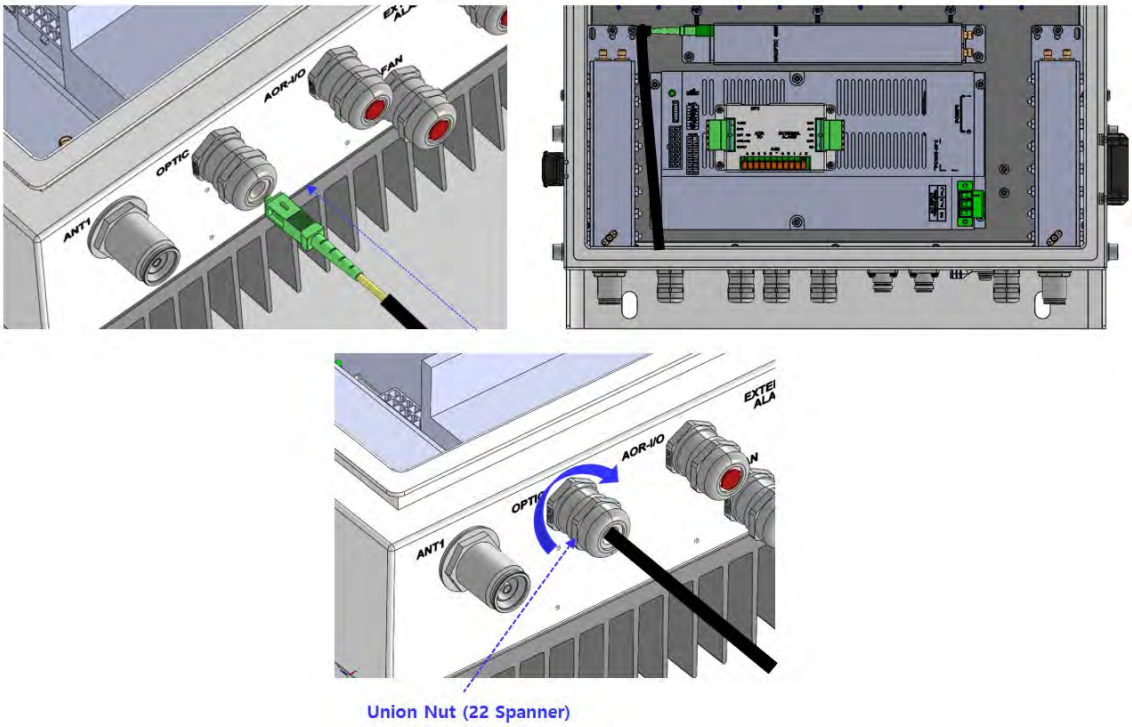


**Figure 22. How to install Optical cable**

Assembly sequence

1. Insert the optical cable into the CABLE GLAND
2. Assemble as shown.
3. Tighten the CABLE GLAND NUT (Torque = 5.5N·m)

### 3.1.8 Mounting of HRDU_4000

HROU_4000_2540 has slots to enable up to four HRDU modules to be mounted in.

You can mount an HRDU into the designated slot surely. It is not possible to provide services with an HRDU module alone; you need to connect the HRDU cavity duplexer antenna port with CU's designated port.

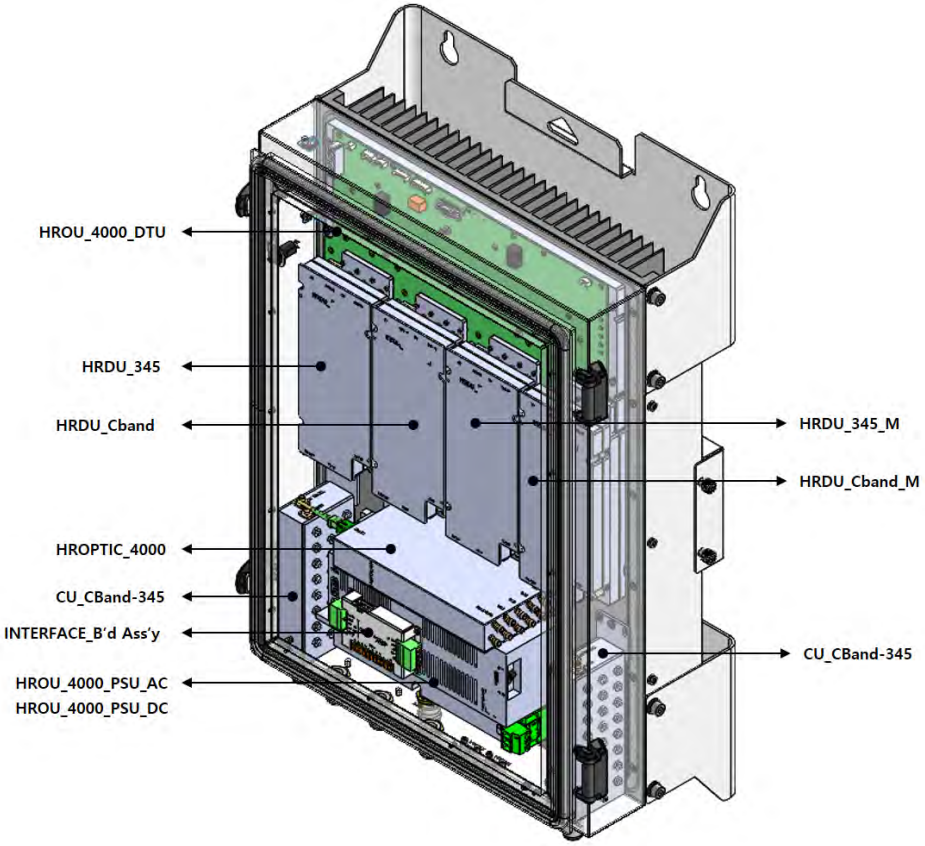


**Figure 23. Location of each module in the HROU_4000_2540**

The remote unit holds a maximum of 4 HRDUs. Guide brackets on the bottom of each HRDU slot simplify installation as described below. MRDU installation requires a #1 tip-sized crosshead screwdriver.

The procedures are:

1. Place the HRDU to be horizontal to the guide pin of the enclosure.
2. Slide the HRDU to fit the corresponding interface location of the DTU and HROPTIC connector.

3. Secure 4 screws with a #1 tip-sized crosshead screwdriver to fasten the HRDU.

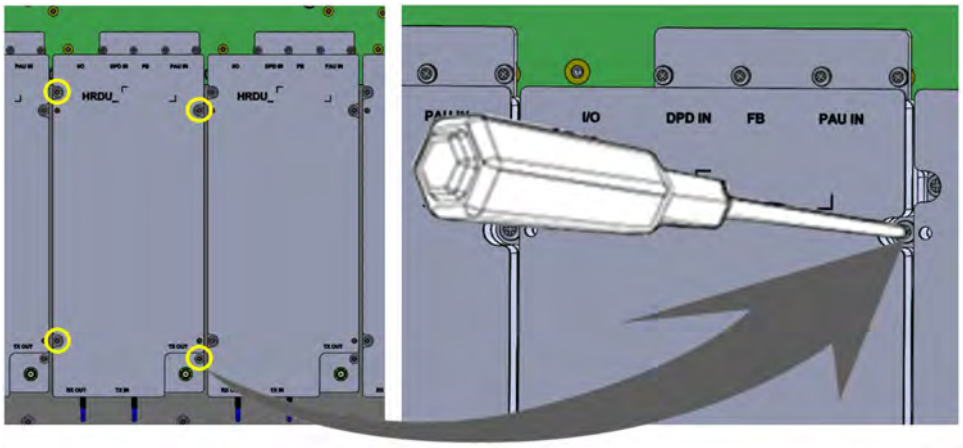


**Figure 24.How to mount HRDU**

### 3.1.9 Replacing a FAN Unit

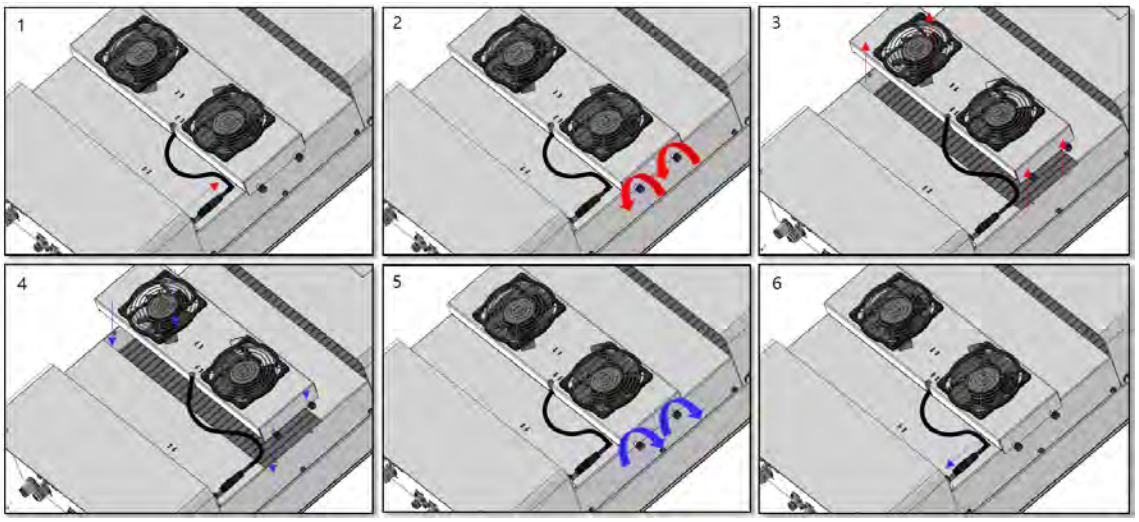


**Figure 25. How to change fan units**

The assembly procedure is as follows:

1. Disconnect the cable connector (If the fan unit is dismantled without disconnecting the cable, care must be taken as this may apply a great deal of force to the cable.)
2. Remove the four captive screws of the fan unit.
3. Remove the fan unit from the hull.
4. Attach a new fan unit to its location.
5. Tighten the four captive screws of the fan unit.
6. Connect the cable connector.