ALLIANCE TW_HROU_4000_TN

User Manual

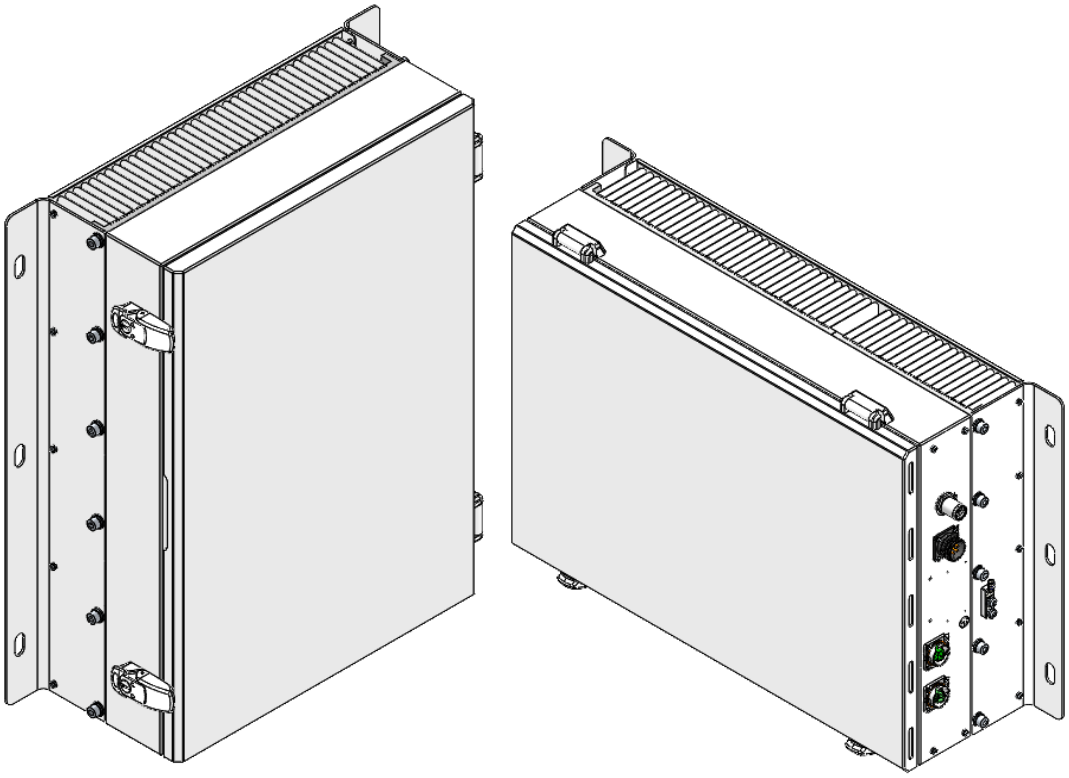

Document Reference:

Version:	V1.0
Document Status:	Release 1
Issue Date:	November 21, 2023
Author:	Yong Hee Kim
Department:	Alliance development Team
Authorizing Manager:	Hyun Seok Chae

REVISION HISTORY

Version	Issue Date	No. of Pages	Initials	Details of Revision Changes
V 1.0	Nov. 21, 2023		Original	

Technical Support

SOLiD serial numbers must be available to authorize technical support and/or to establish a return authorization for defective units. The serial numbers are located on the back of the unit, as well as on the box in which they were delivered. Additional support information may be obtained by accessing the SOLiD Tehcnology, Inc. website at www.solid.co.kr.

This manual is produced by Global Business Division Team and printed in Korea.

Contents

Section1 Safety & Certification Notice 6

Section2 System Configuration and Functions 9

2.1 High power 5G Remote 9
2.1.1 Specifications of HROU 10
2.1.2 Block Diagram of TW_HROU_4000_TN 13
2.1.2.1 TW_HROU_4000_TN block diagram 13
2.1.2.2 TW_HROU_4000_TN inner look 14
2.1.2.3 HROU part list 15
2.1.3 Function by unit 16
2.1.3.1 High Remote Drive Unit (HRDU) 16
2.1.3.2 Remote Power Supply Unit (RPSU) 17
2.1.3.3 Remote Optic (HROPTIC_4000) 17
2.1.3.4 TW_HROU_4000_TN_DTU 18
2.1.3.5 Multiplexer 19
2.1.4 Port of TW_HROU_4000_TN 19
2.1.4.1 Functions 19

Section3 System Installation 21

3.1 TW_HROU_4000_TN Installation 21
3.1.1 Tools 21
3.1.2 TW_HROU_4000_TN Enclosure installation 21
3.1.2.1 TW_HROU_4000_TN_V 21
3.1.2.1.1 TW_HROU_4000_TN_V Wall Mount Installation 23
3.1.2.2 TW_HROU_4000_TN_H 24
3.1.2.3 TW_HROU_4000_TN_H Wall Mount Installation 25
3.1.3 TW_HROU_4000_TN components 26
3.1.4 TW_HROU_4000_TN Power Cabling 27
3.1.5 TW_HROU_4000_TN Ground cabling 28
3.1.5.1 TW_HROU_4000_TN_V 29
3.1.5.2 TW_HROU_4000_TN_H 30
3.1.6 TW_HROU_4000_TN Optical Cable 32
3.1.7 Mounting of HRDU_4000 33

Contents of Figure

Figure 1. TW_HROU_4000_TN_V outer Look 10

Figure 2. TW_HROU_4000_TN_H outer Look 10

Figure 3. TW_HROU_4000_TN Block diagram 13

Figure 4. inside of Remote Unit of TW_HROU_4000_TN_V 14

Figure 5. inside of Remote Unit of TW_HROU_4000_TN_H 14

Figure 6. HRDU Outer Look 16

Figure 7. AC-DC RPSU Outer Look 17

Figure 8. R OPTIC Outer Look 18

Figure 9. TW_HROU_4000_TN_DTU Outer Look 18

Figure 10. Multiplexer Outer Look 19

Figure 11. The bottom look of TW_HROU_4000_TN_V 19

Figure 12. The side look of TW_HROU_4000_TN_H 20

Figure 13. How to install TW_HROU_4000_TN_V 22

Figure 14. Dimension used to install TW_HROU_4000_TN_V on the WALL 23

Figure 15. Procedures of installation 24

Figure 16. How to install TW_HROU_4000_TN_H 24

Figure 17. Dimension used to install TW_HROU_4000_TN_H on the WALL 25

Figure 18. Procedures of installation 26

Figure 19. How to install power cable 28

Figure 20. Terminal Information 28

Figure 21. Location of Ground Terminal 29

Figure 22. How to install Ground Terminal 29

Figure 23. Location of Ground Terminal 30

Figure 24. How to install Ground Terminal 31

Figure 25. Location of Optical Connector (TW_HROU_4000_V) 32

Figure 26. How to install Optical cable (TW_HROU_4000_H) 32

Figure 27. Location of each module in the TW_HROU_4000_TN_V 33

Figure 28. Location of each module in the TW_HROU_4000_TN_H 34

Figure 29.How to mount HRDU 34

Section1

Safety & Certification Notice

"Only qualified personnel should handle the DAS equipment. Any person involved in installation or service of the DAS should understand and follow these safety guidelines."

- Obey all general and regional installation and safety regulations relating to work on high voltage installations, as well as regulations covering the correct use of tools and personal protective equipment.

- The power supply unit in repeaters contains dangerous voltage levels, which can cause electric shock. Switch the mains off prior to any work in such a repeater. Any local regulations are to be followed when servicing repeaters.

- When working with units outdoors, make sure to securely fasten the door or cover in an open position to prevent the door from slamming shut in windy conditions.

- Use this unit only for the purpose specified by the manufacturer. Do not carry out any modifications or fit any spare parts which are not sold or recommended by the manufacturer. This could cause fires, electric shock, or other injuries.

- Do not operate this unit on or close to flammable materials, as the unit may reach high temperatures due to power dissipation.

- Do not use any solvents, chemicals, or cleaning solutions containing alcohol, ammonia, or abrasives on the DAS equipment. Alcohol may be used to clean fiber optic cabling ends and connectors.

- To prevent electrical shock, switch the main power supply off prior to working with the DAS System or Fiber BDA. Never install or use electrical equipment in a wet location or during a lightning storm.

- Do not look into the ends of any optical fiber or directly into the optical transceiver of any digital unit. Use an optical spectrum analyzer to verify active fibers. Place a protective cap over any radiating transceiver or optical fiber connector to avoid the potential of radiation exposure.

- Allow sufficient fiber length to permit routing without severe bends.

- For pluggable equipment, make sure to install the socket outlet near the equipment so that it is easily accessible.

- A readily accessible disconnect device shall be incorporated external to the equipment.

- The power of this system shall be supplied through wiring installed in a normal building.
If powered directly from the mains distribution system, it shall be used with additional protection, such as an overvoltage protection device

- Only 50 ohm rated antennas, cables, and passive equipment shall be used with this remote. Any equipment attached to this device not meeting this standard may cause degradation and unwanted signals in the bi-directional system. All components connected to this device must operate in the frequency range of this device.

- Only 50 ohm rated antennas, cables, and passive components operating from 150 - 4 GHz shall be used with this device.

- The head end unit must always be connected to the Base Station using a direct cabled connection. This system has not been approved for use with a wireless connection via server antenna to the base station.

- Fuses : replaceable by skilled person
(component ID: F1, F2), Ratings (10 A), "Ratings (100/240VAC T10A H)", and (symbol of required characteristics) located on or adjacent to fuse in service manual. Fuses (F1, F2) located in Line and Neutral.
CAUTION: Double pole, neutral fusing. Disconnect mains before servicing.
ATTENTION. Double pôle/fusible sur le neutre. Débrancher l'alimentation avant l'entretien.

- RAL (RESTRICTED ACCESS AREA)
"Equipment is intended for installation in Restricted Access Area" (Instruction)/"Les matériels sont destinés à être installés dans des EMPLACEMENTS À ACCÈS RESTREINT" (Instruction)

- Earthing LUG
Wire M6 STUD/AWG#6, Lug M6/JOCT-0202-RS06 CCN ZMVV
Shall specify installation wire 1015/16AWG, connection to lug terminals (tooling) and specific lug terminals (M6/Tongue form: Round type, Barrel form: Standard barrel type, Listed (ZMVV)) including appropriate torque values for connection to terminals.

- Access can only be gained by SERVICE PERSONS or by USERS who have been instructed about the reasons for the restrictions applied to the location and about any precautions that shall be taken; access is through the use of a TOOL or lock and key, or other means of security, and is controlled by the authority responsible for the location.

- Notice! Be careful not to touch the Heat-sink part due to the high temperature.

- Signal booster warning label message should include

WARNING. This is **NOT** a **CONSUMER** device. It is designed for installation by **FCC LICENSEES** and **QUALIFIED INSTALLERS**. You **MUST** have an **FCC LICENSE** or express consent of an FCC Licensee to operate this device. Unauthorized use may result in significant forfeiture penalties, including penalties in excess of $100,000 for each continuing violation.

- Certification

- FCC: This equipment complies with the applicable sections of Title 47 CFR Parts 15 and 27.
  - Use of unauthorized antennas, cables, and/or coupling devices not conforming with ERP/EIRP and/or indoor-only restrictions is prohibited.
  - Home/personal use is prohibited.

- UL/CUL: This equipment complies with UL and CUL 62368 Standard for safety for information technology equipment, including electrical business equipment
- FDA/CDRH: This equipment uses a Class 1 LASER according to FDA/CDRH Rules. This product conforms to all applicable standards of 21 CFR Chapter 1, Subchapter J, Part 1040

FCC Part 15.105 statement

This equipment has been tested and found to comply with the limits for a Class A digital device, pursuant to part 15 of the FCC Rules. These limits are designed to provide reasonable protection against harmful interference when the equipment is operated in a commercial environment. This equipment generates, uses, and can radiate radio frequency energy and, if not installed and used in accordance with the instruction manual, may cause harmful interference to radio communications. Operation of this equipment in a residential area is likely to cause harmful interference in which case the user will be required to correct the interference at his own expense.

FCC Part 15.21 statement

Any changes or modifications not expressly approved by the party responsible for compliance could void the user's authority to operate this equipment.

RF Exposure Statement

This device must be professionally installed. The antenna(s) must be installed such that a minimum separation distance of at least 4.5 m is maintained for outdoor use [e.g. Rooftop of the building, antenna gain : 12 dBi] and a minimum separation distance of at least 60 cm is maintained for indoor use [antenna gain considering the cable loss : -16 dBi] between the radiator (antenna) and all persons at all times .

Section2

System Configuration and Functions

2.1 High power 5G Remote

TW_HROU_4000_TN is a remote unit that supports services for the C-Band, Auction 110 Band, and the 2500 Band. TW_HROU_4000_TN receives TX optical signals from ODU and converts them into RF signals. The converted RF signals are amplified through high-power amps in the corresponding HRDU bands combined with UDCU, PAU, and Cavity duplexer, and then radiated to the antenna port.

When receiving RX signals through the antenna port, this unit filters out-of-band signals in a corresponding HRDU and sends the results to R-OPTIC to make an electronic-to-optical conversion. After conversion, the signals are sent to the upper device of ODU. TW_HROU_4000_TN can be equipped with up to four HRDUs (High Remote Drive Unit) and each module supports a single band only.

TW_HROU_4000_TN has a digital board to improve the PAU's linearity by performing DPD (Digital Pre-Distortion). Also, CFR works to improve the PAPF performance. Since C-Band and Auction 110 band uses TDD technology, the digital board of HROU is also equipped with the SDM to acquire the synchronization for 5G NR TDD signals.

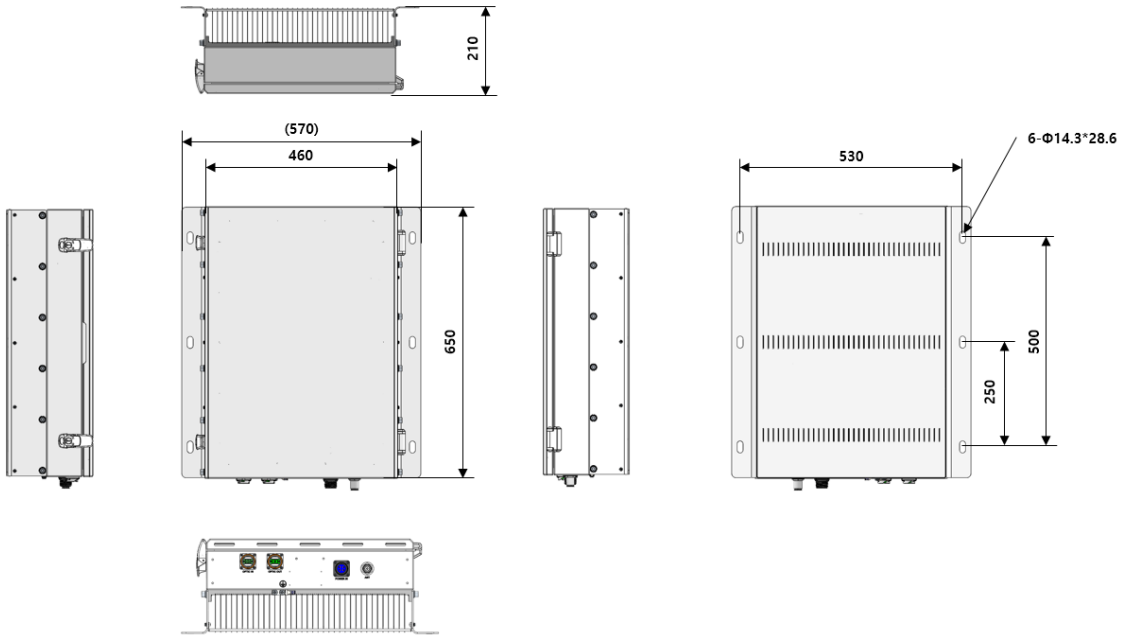

Figure 1. TW_HROU_4000_TN_V outer Look

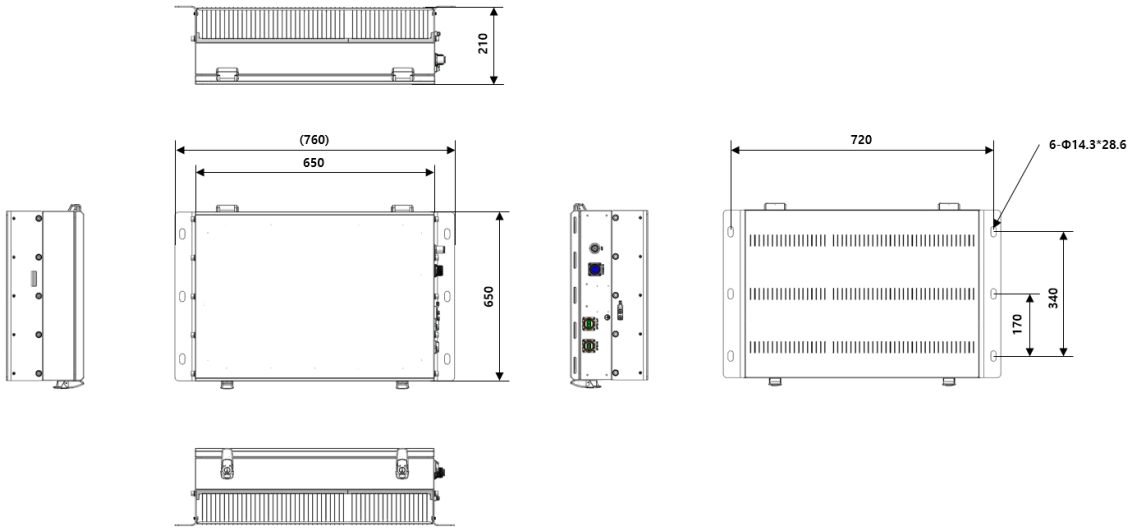

Figure 2. TW_HROU_4000_TN_H outer Look

2.1.1 Specifications of HROU

Item	Spec.		Remark
	TW_HROU_4000_TN		
The nominal bandwidth	C-Band	280MHz	3700 - 3980MHz

	Auction 110		100MHz	3450 - 3550MHz
	2500		194MHz	2496 - 2690MHz
Input power	TX		LPOI : -10 - 20dBm	Each port
			HPOI : +15 – 43dBm	
	RX		HROU : -50dBm	
Output power	TX	HRDU_Cband_R	+45dBm + 1dB	20 / 40 / 60 / 80 / 100MHz 100+80+60+40MHz (NR)
		HRDU_345	+43dBm + 1dB	20 / 40 / 60 / 80 / 100MHz (NR)
		HRDU_2500_FB_TDD_R	+43dBm + 1dB	20 / 40 / 60 / 80 / 100MHz (NR) 5 / 10 / 15 / 20MHz (LTE)
	RX		-23dBm ± 1dB	
System gain	TX	HRDU_Cband_R	65dB	20 / 40 / 60 / 80 / 100MHz 100+80+60+40MHz
		HRDU_345	63dB	20 / 40 / 60 / 80 / 100MHz
		HRDU_2500_FB_TDD_R	63dB	20 / 40 / 60 / 80 / 100MHz (NR) 5 / 10 / 15 / 20MHz (LTE)
	RX		27dB	25dB Gain control
Spurious emissions	≤ -13dBm			
VSWR	1.69:1 typical, 1.80:1 max.			
Input/ Output Impedance	50 ohm			
Optical connector	SC/APC, LC/APC, step Ferrule, waterproof, single mode fiber			
Craft port	Serial interface RS-232 9 pin D-sub male			
Monitoring port	-40dB(±3dB), SMA female, TX output Only			
Weight	Vertical type : 81.6 lbs. (37 Kg) max			Fully loaded
	Horizontal type : 79.4 lbs. (36 Kg) max			
Power consumption	120W			Common Part (R-optic, DPD Board)
Temperature range	-25°C to +55°C/ -13 to 131°F			Ambient Temperature

Humidity range	0% ~ 90%	Non-condensing
Sealing (Remote Unit)	IEC 60 529 EN 60 529	IP66 Complaint
Size(mm)	Vertical type : 22.4“ x 25.6“ x 8.3“ (570 x 650 x 210mm)	Including Bracket
	Horizontal type : 29.9“ x 18.1“ x 8.3“ (760 x 460 x 210mm)	

2.1.2 Block Diagram of TW_HROU_4000_TN

2.1.2.1 TW_HROU_4000_TN block diagram

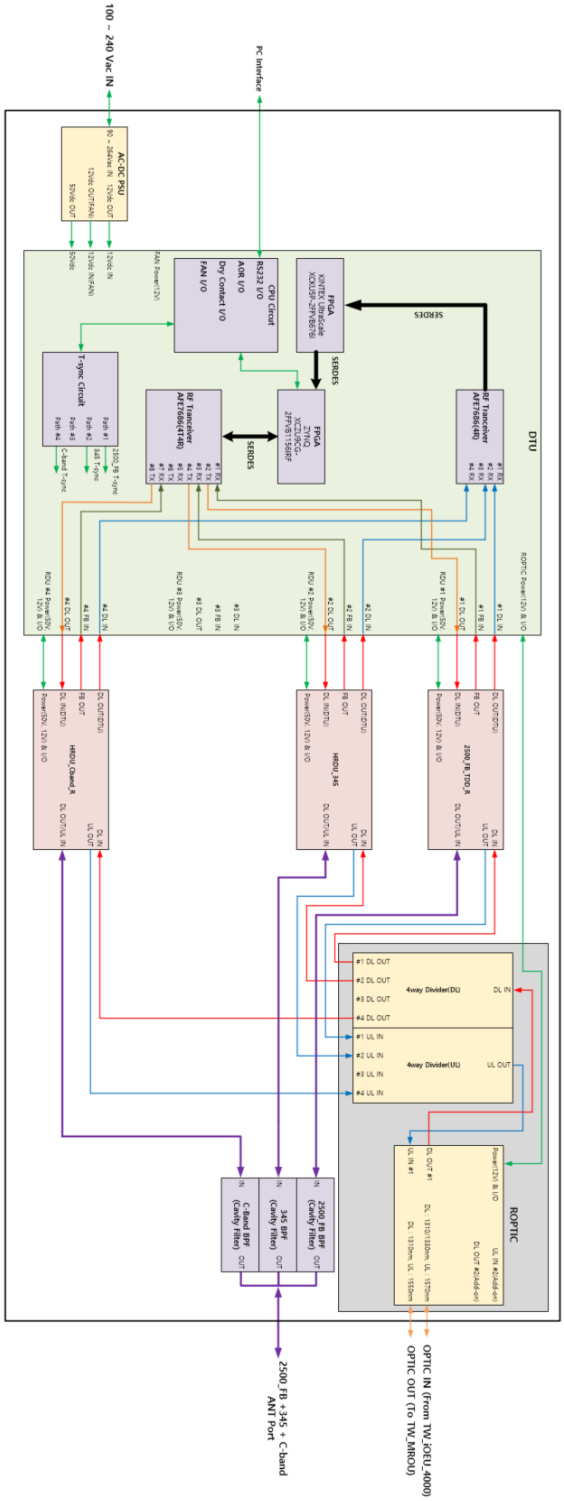

Figure 3. TW_HROU_4000_TN Block diagram

2.1.2.2 TW_HROU_4000_TN inner look

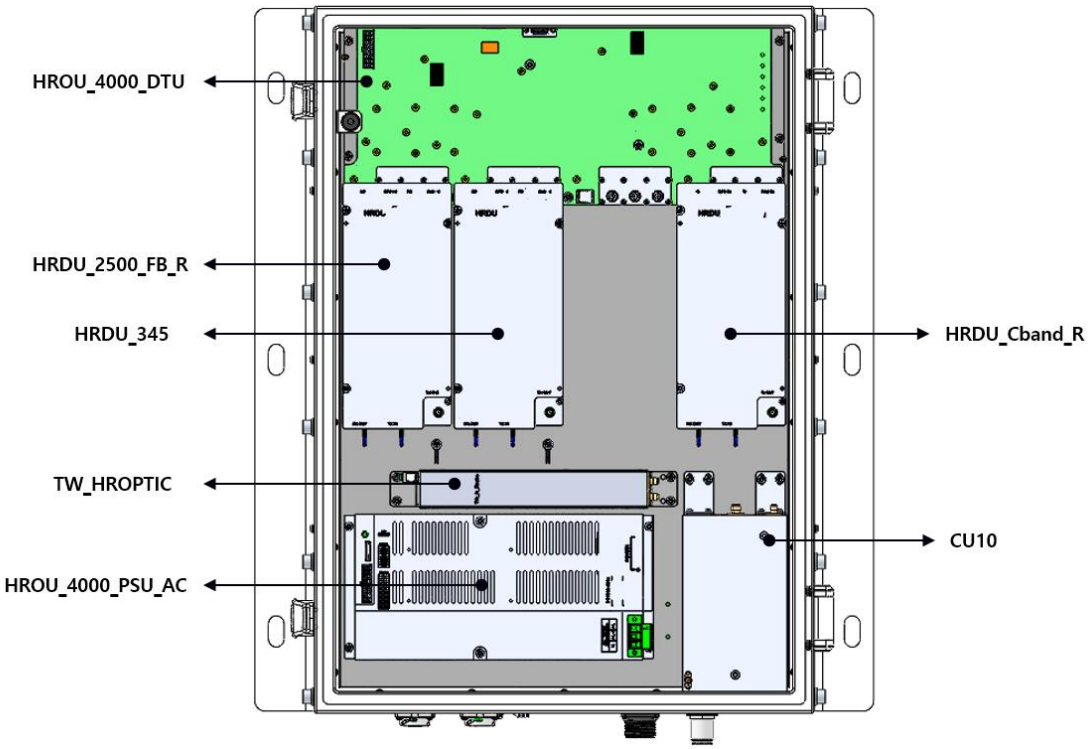

Figure 4. inside of Remote Unit of TW_HROU_4000_TN_V

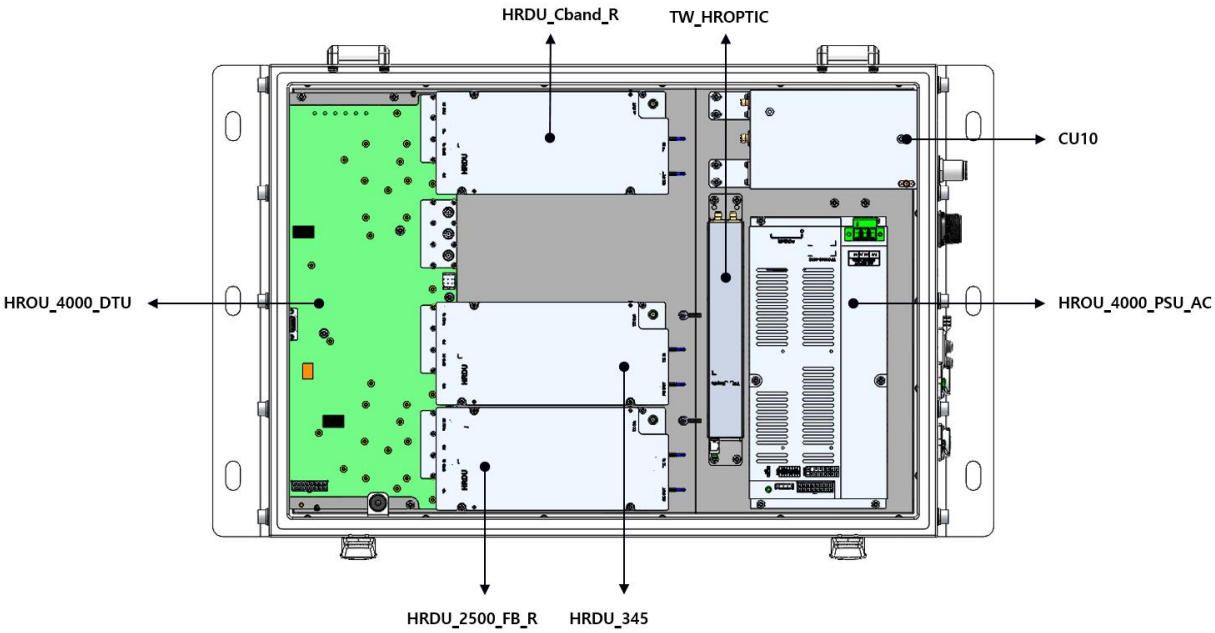

Figure 5. inside of Remote Unit of TW_HROU_4000_TN_H

2.1.2.3 HROU part list

No.	Unit	Description	Remark
1	HRDU X3	**High Remote Drive Unit** Consists of UDCU and PAU Filters and amplifies TX signals; Filters and amplifies RX signals in low noise amplifier;	Optional Max 3
2	TW_HROU_4000_TN_PSU (AC)	**Remote Power Supply Unit** Input power: 100~240VAC Output power: +50, +12V, VDC	
3	HROPTIC_4000	**Remote Optic** Makes RF conversion of TX optical signals; Converts RX RF signals into optical signals; Compensates optical loss; 5dBo optical link between ODU(OM4) and ROU; 10dBo optical link between ODU(OM1) and ROU; Fiber Connector: SC/APC Connector; Optical Wavelength: 1310/1330/1550 WDM; Communicates with BIU/OEU through the FSK modem	
4	TW_HROU_4000_TN_DTU	**Remote Central Processor & Digital signal processor Unit** Controls signal of each unit; Monitors BIU/ODU/OEU status through FSK modem communication; Performs DPD to improve the PAU efficiency; CFR is a technique used to reduce the PAPR of the transmitted signals; Acquires the synchronization for 5G NR and LTE TDD signals	
5	CU_10	**Multiplexer** This integrated combiner unit combines C-band, auction 110 and 2500 for the output to a single antenna connection.	
6	Enclosure	Enclosure to satisfy IP66 Wall mounting type	

2.1.3 Function by unit

2.1.3.1 High Remote Drive Unit (HRDU)

When receiving TX signals from each band through Remote Optic, HRDU filters the signals and amplifies them with High Power Amplifier. The unit also filters RX signals given through a cavity filter and amplifies them to send the signals to Remote Optic. In the unit, there is ATT to adjust the gain. An HRDU consists of a UDCU and a PAU like the below figure and all modules are merged into one package.

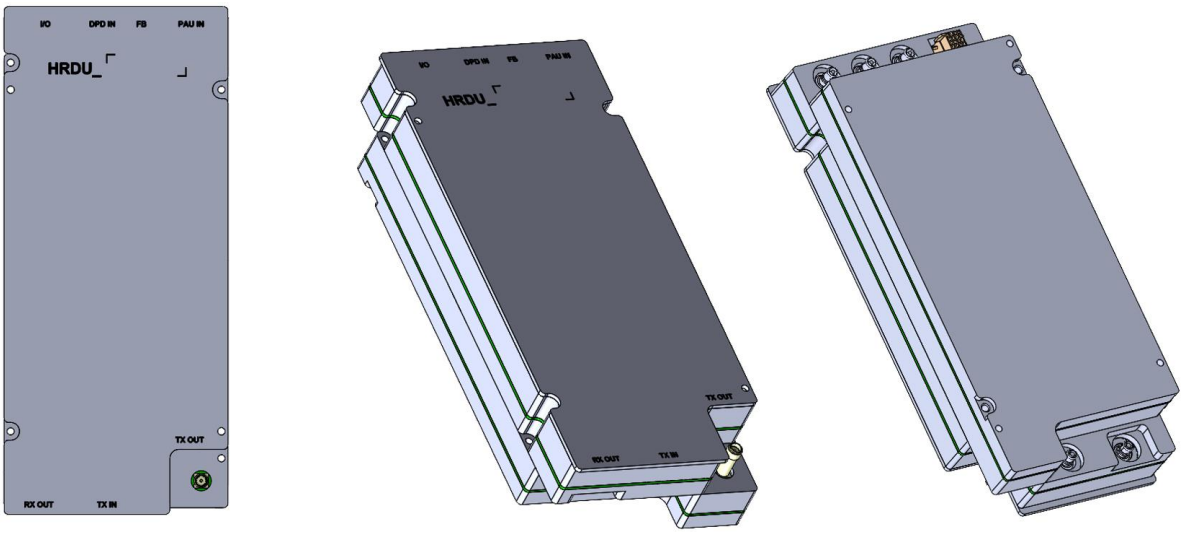

Figure 6. HRDU Outer Look

HRDU devices are varied by each frequency band, including the following:

No	Unit Naming	Description	Frequency (Bandwidth)	
			TX	RX
1	HRDU_Cband_R	Single band	3700 – 3980MHz	
2	HRDU_345	Single band	3450 – 3550MHz	
3	HRDU_2500_FB_TDD_R	Single band	3450 – 3550MHz	

2.1.3.2 Remote Power Supply Unit (RPSU)

RPSU in the TW_HROU_4000_TN supplies power to the active modules within the enclosure and receives power from an external source.

The PSU receives input of AC 110V/220V from an external source.

The RPSU includes a circuit breaker for toggling power ON/OFF and features an LED indicator at the top to verify the normal supply of input power.

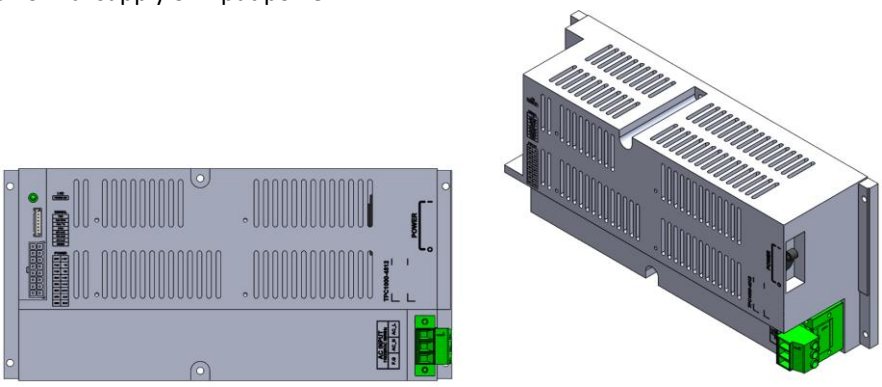

Figure 7. AC-DC RPSU Outer Look

Functions:

- Provides a circuit breaker to turn the AC power ON/OFF
- Provides DC power to DPD board, HROPTIC_4000, HRDU, and FAN Unit
- LED indicators to show the alarm status of the PSU

Caution

DOUBLE POLE/NEUTRAL FUSING

2.1.3.3 Remote Optic (HROPTIC_4000)

Remote Optic converts optical signals into RF signals and performs vice versa. It also has internal ATT for optical compensation to compensate for optical cable loss. It provides two paths in pairs (TX/RX) to transport RF signal to ADD On port.

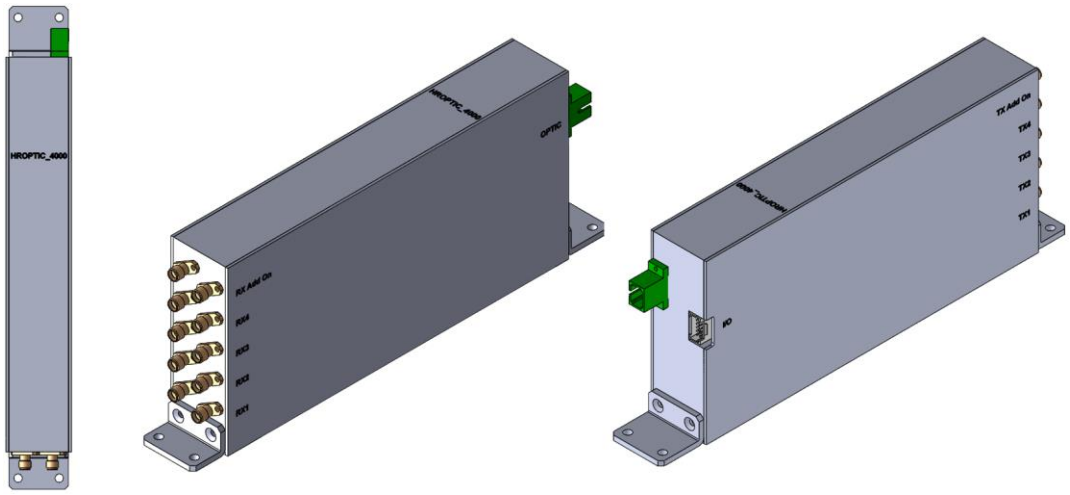

Figure 8. R OPTIC Outer Look

2.1.3.4 TW_HROU_4000_TN_DTU

Remote Central Processor Unit (RCPU)

TW_HROU_4000_TN_DTU can monitor and control each module of TW_HROU_4000_TN. This unit receives and analyzes upper communication data from Remote Optic and reports the unit's value to upper devices. On the front of the module, it has LED indicators to show system status, letting you check any abnormalities at a time. On the same front, it also has communication LED Indicators to show communication status with upper devices. Through the local port, the unit enables you to check and control device status through a PC or laptop.

Digital transmission Unit (DTU)

TW_HROU_4000_TN_DTU performs DPD to improve the HRDU PAU efficiency. Also, CFR is used in DTU as a technique to reduce the PAPR of the transmitted signal. TW_HROU_4000_TN_DTU also acquires the synchronization for 5G NR TDD signals.

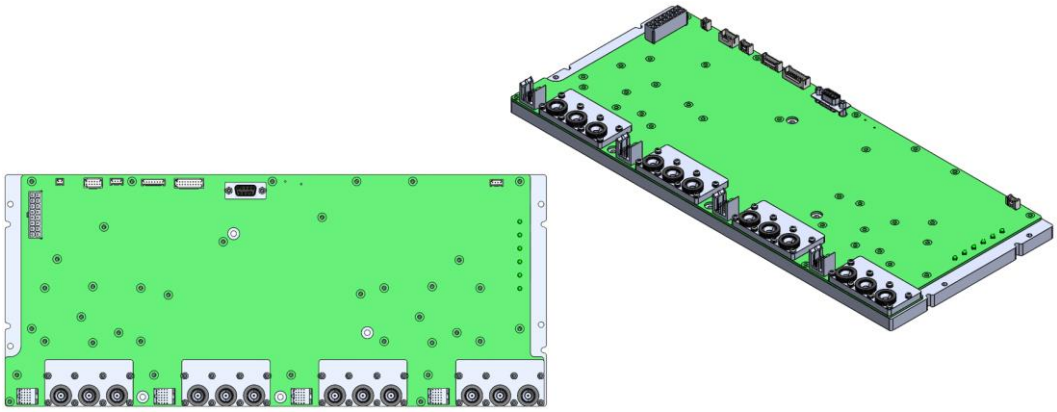

Figure 9. TW_HROU_4000_TN_DTU Outer Look

2.1.3.5 Multiplexer

A multiplexer is called a Combine Unit (CU) since it works as a module to combine or distribute multiple signals into one or two antennas. This device has a port to combine multiple signals. You need to connect the input and output ports of RDU to the corresponding port of the multiplexer.

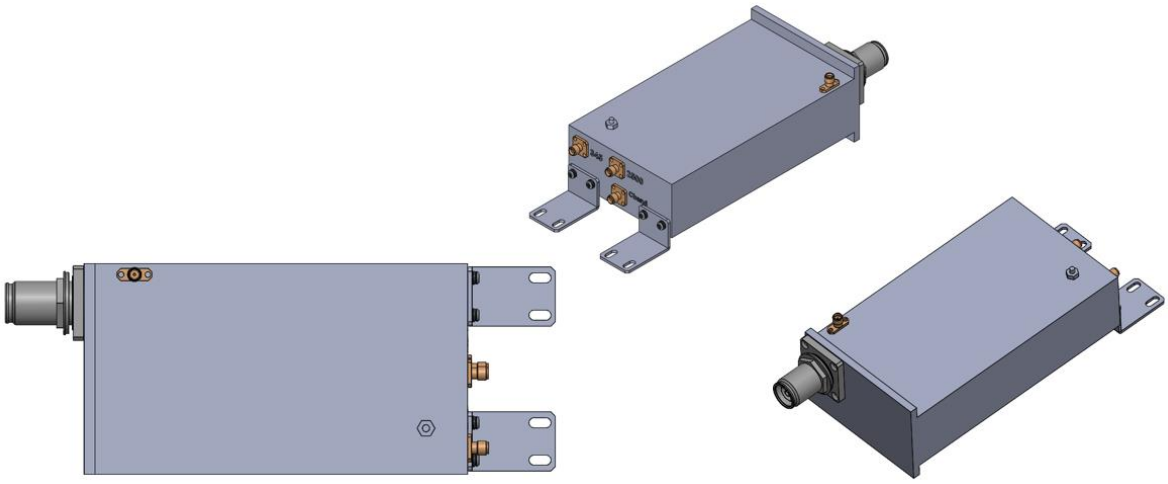

Figure 10. Multiplexer Outer Look

2.1.4 Port of TW_HROU_4000_TN

2.1.4.1 Functions

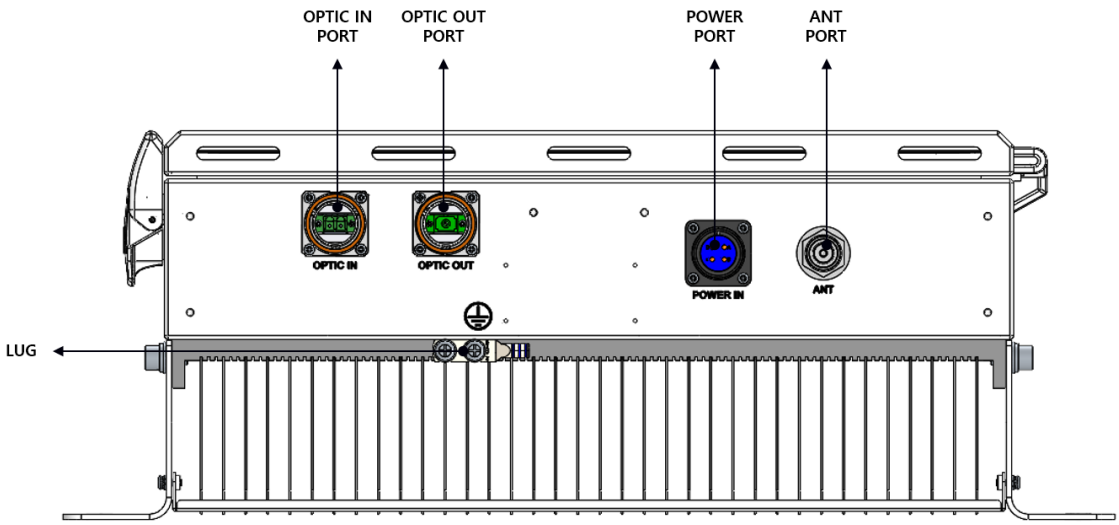

Figure 11. The bottom look of TW_HROU_4000_TN_V

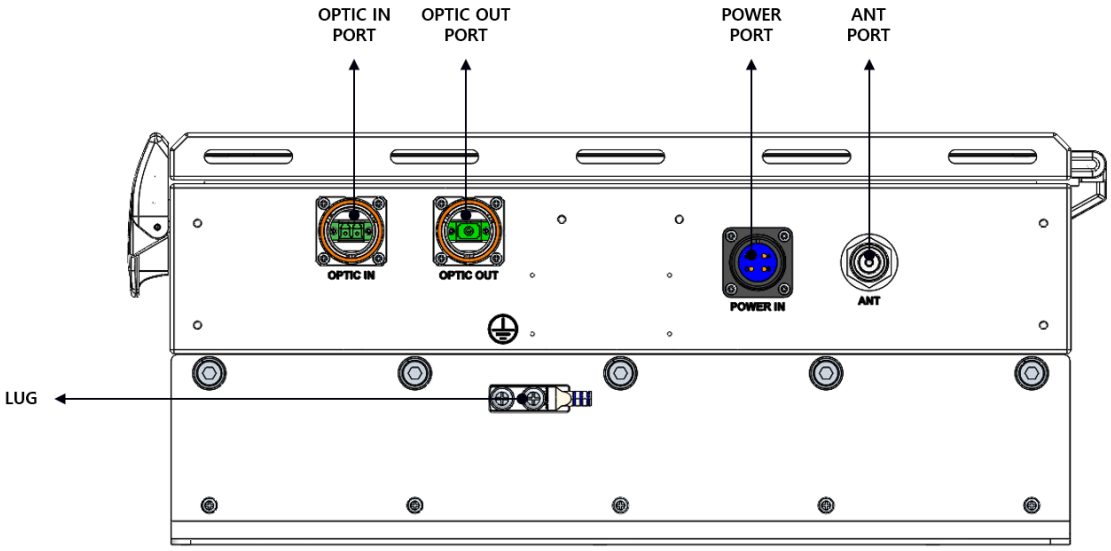

Figure 12. The side look of TW_HROU_4000_TN_H

No	Port name	QTY	Remark
1	OPTIC IN	1EA	LC/APC, Waterproof Optic Input port
2	OPTIC OUT	1EA	SC/APC, Waterproof Optic Input port
3	ANT	1EA	4.3-10 type female_CU port
4	POWER IN	1EA	Waterproof, AC Power IN
5	GND Lug Port	1EA	Terminal for system ground

Section3 System Installation

3.1 TW_HROU_4000_TN Installation

This chapter describes how to install each unit and optical cable, along with the power cabling method. In detail, the chapter describes how to install shelves or enclosures of each unit, the power cabling method, and the optical cabling and RF interface. Furthermore, by showing the power consumption of modules installed in each unit, it presents the power cabling budget in a simple way. Then, how many components are required to install each unit and for the expansion is described in this chapter.

3.1.1 Tools

The tools needed for the installation are described in the table below.

No	Tools	Q'ty	Specification	Remark
1		1	+ (crosshead), 3Ø Length is more than 20mm	For fixing HRDU
2		1	22mm	To tighten the antenna port
3		1	8mm	To CU from HRDU

3.1.2 TW_HROU_4000_TN Enclosure installation

HROU is designed to be water- and dirt-proof. The unit has the structure of a one-body enclosure. It satisfies water-proof and quake-proof standards equivalent to IP66. TW_HROU_4000_TN can be attached using a wall-mountable bracket. TW_HROU_4000_TN can be mounted either on a wall or a pole.

3.1.2.1 TW_HROU_4000_TN_V

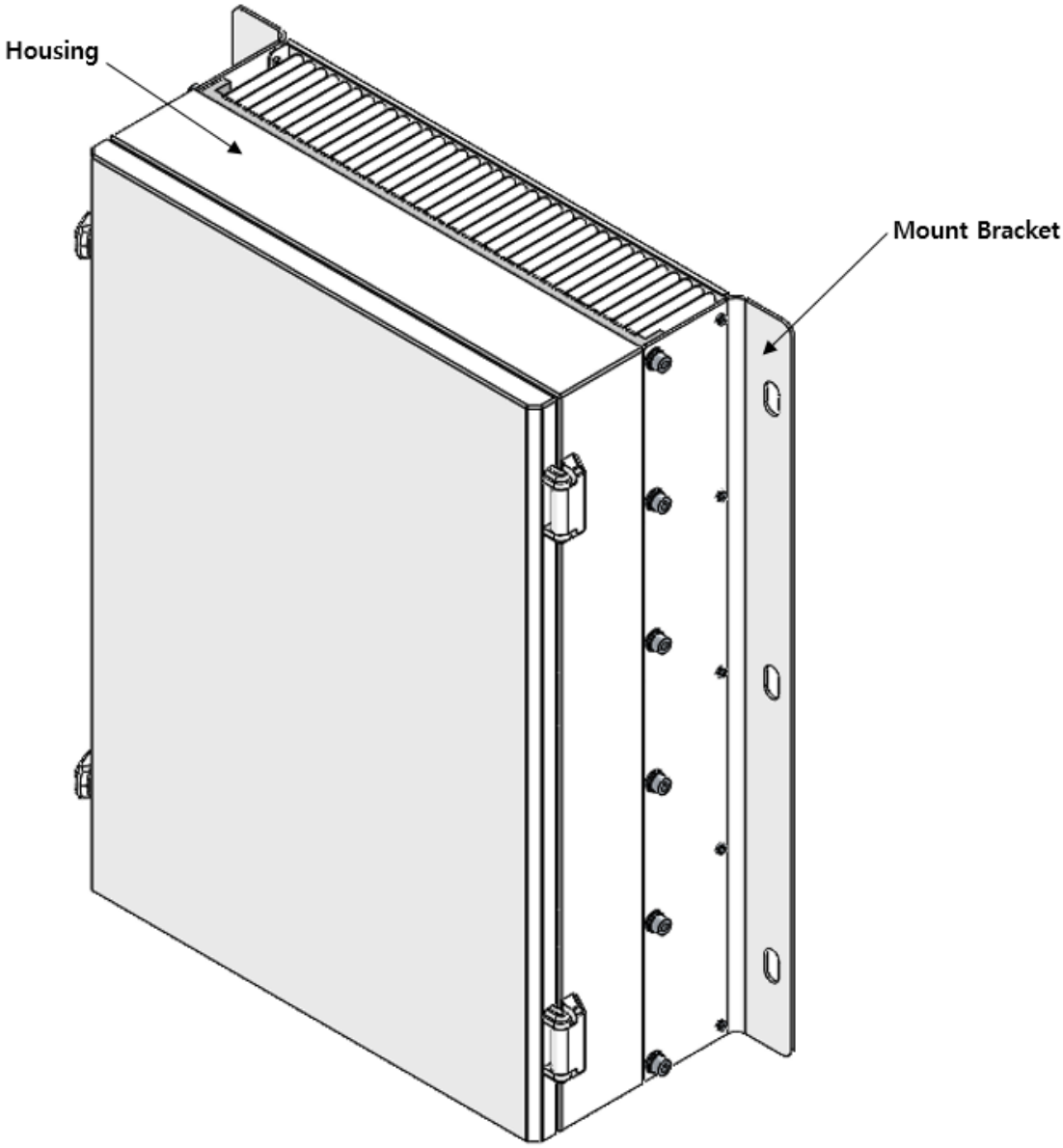

Figure 13. How to install TW_HROU_4000_TN_V

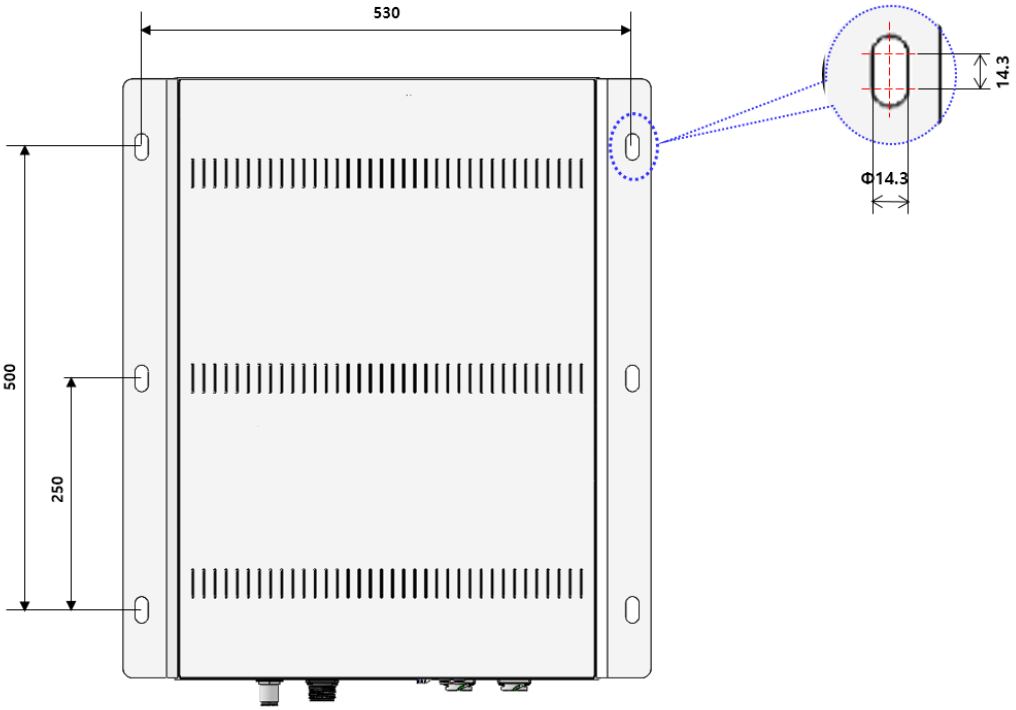

Figure 14. Dimension used to install TW_HROU_4000_TN_V on the WALL

3.1.2.1.1 TW_HROU_4000_TN_V Wall Mount Installation

HROU's installation bracket is attached to the enclosure when HROU is delivered. Users do not need to remove the bracket to install the enclosure. Simply secure four M12 mounting bolts tightly as the procedures below:

1. Install 2 of the M12 mounting bolts roughly halfway on the enclosure and install the enclosure over the bolts and secure the bolts tightly.
2. Install 2 of the M12 mounting bolts at the bottom of the enclosure and secure them tightly.

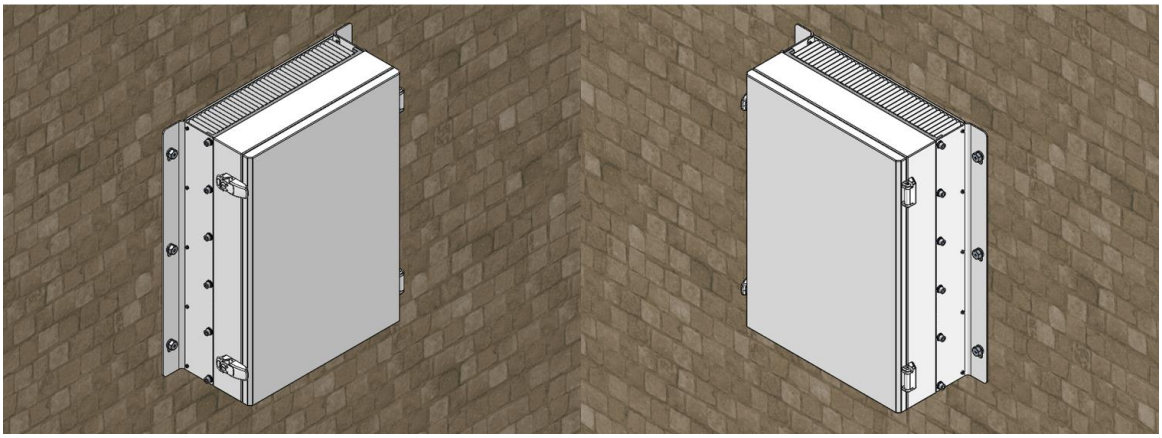

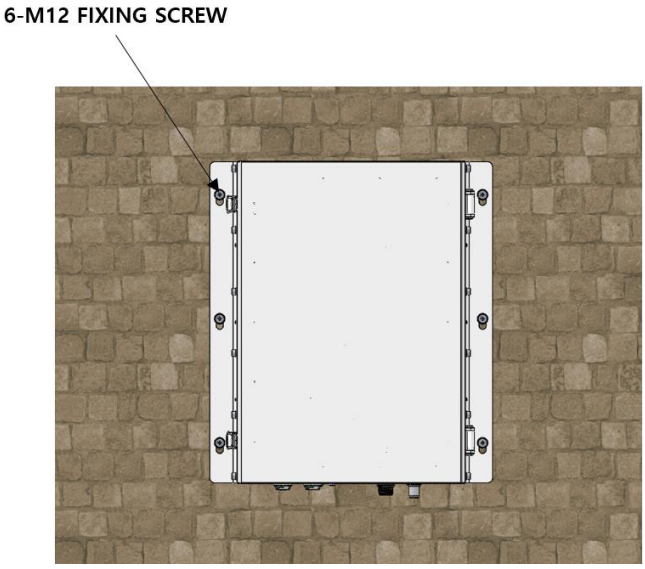

Figure 15. Procedures of installation

3.1.2.2 TW_HROU_4000_TN_H

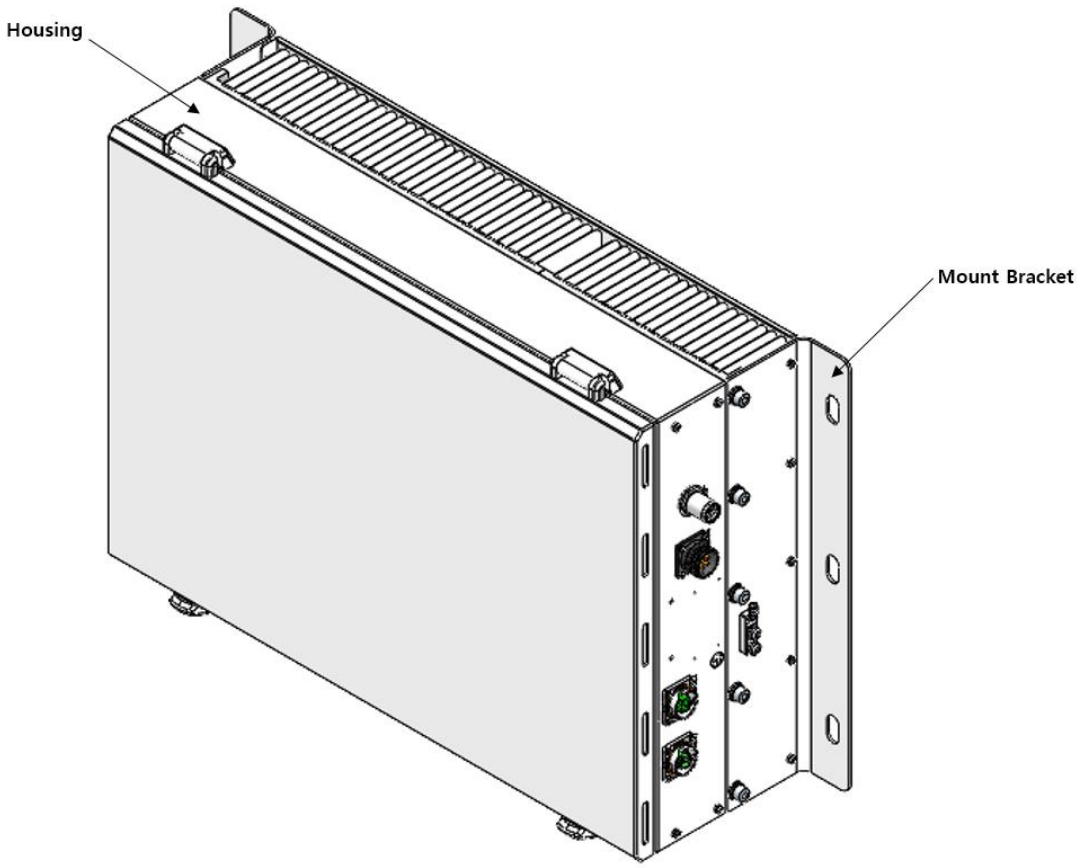

Figure 16. How to install TW_HROU_4000_TN_H

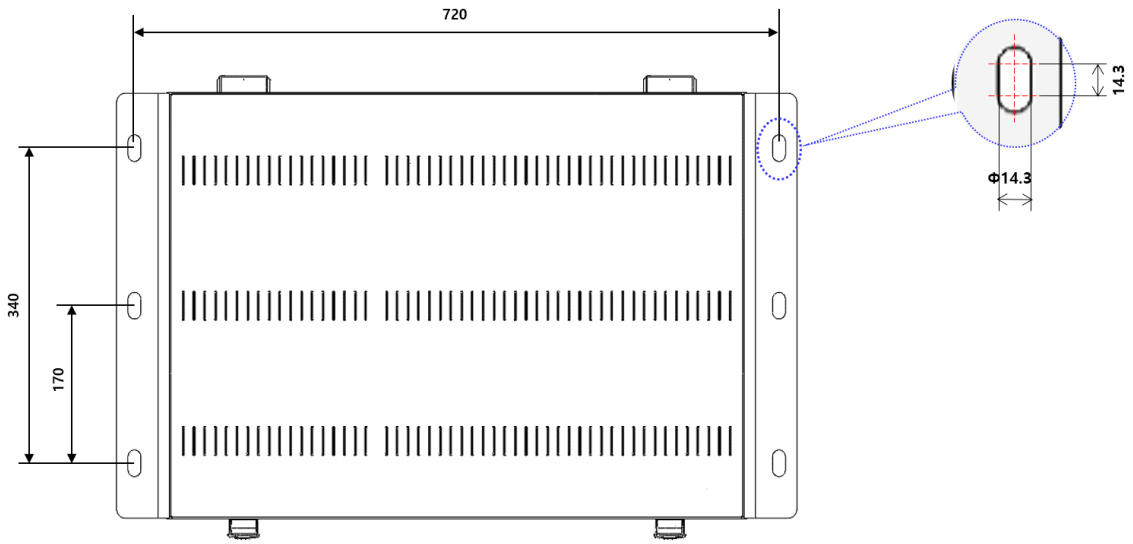

Figure 17. Dimension used to install TW_HROU_4000_TN_H on the WALL

3.1.2.3 TW_HROU_4000_TN_H Wall Mount Installation

HROU's installation bracket is attached to the enclosure when HROU is delivered. Users do not need to remove the bracket to install the enclosure. Simply secure four M12 mounting bolts tightly as the procedures below:

3. Install 2 of the M12 mounting bolts roughly halfway on the enclosure and install the enclosure over the bolts and secure the bolts tightly.
4. Install 2 of the M12 mounting bolts at the bottom of the enclosure and secure them tightly.

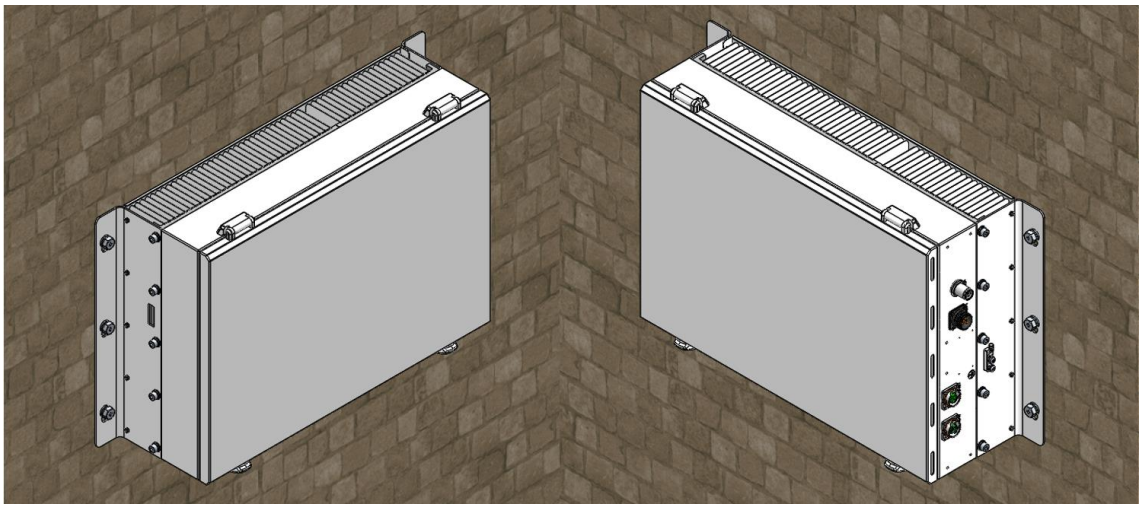

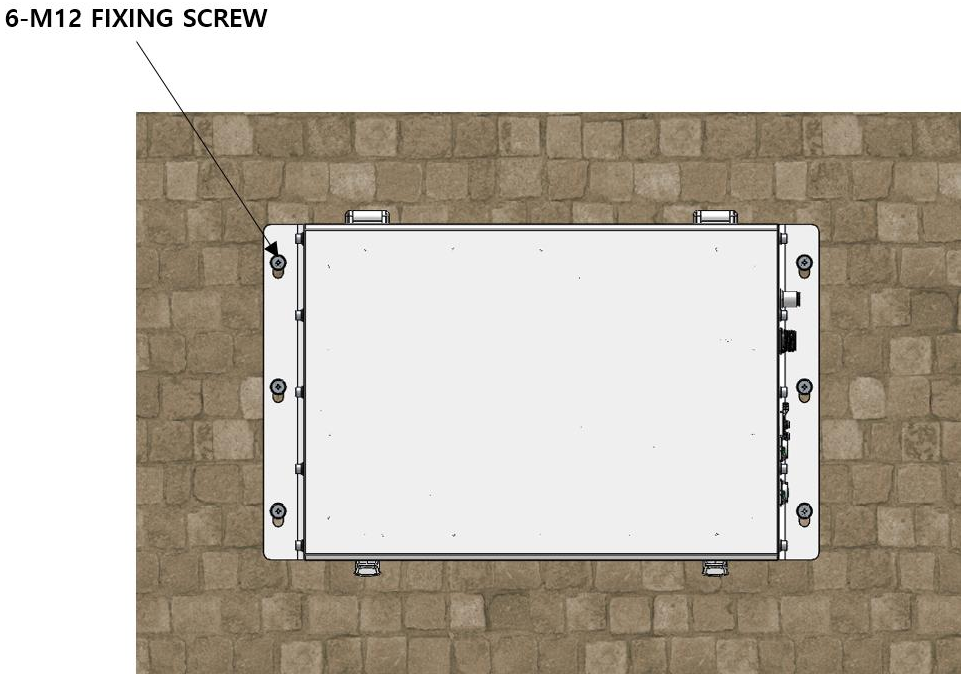

Figure 18. Procedures of installation

3.1.3 TW_HROU_4000_TN components

TW_HROU_4000_TN has the following components:

No.	Unit	Description	Remark
Common Part	Enclosure	Including Wall mounting bracket	1EA
	HROU_4000_DTU	-	1EA
	HROPTIC_OPTIC	-	1EA
	HROU_PSU	AC 110/220V	1EA
	CU_10	Multiplexer	1EA
Optional Part	HRDU	HRDU_Cband_R, HRDU_345, HRDU_2500_FB_TDD_R	Max 3EA

The common part of HROU should have an enclosure and it is equipped with TW_HROU_4000_TN_DTU to inquire and control the state of each module, R_OPTIC to make both electronic-optical and optical-electronic conversions, and RPSU to supply power to HROU. HROU should have a power cable for the external rectifier or to supply the required power.

In addition, HRDU can be mounted and removed to provide service for the desired band.

3.1.4 TW_HROU_4000_TN Power Cabling

AC Power

TW_HROU_4000_TN supports 110V/220V as AC input power. Provided outside power cable is only one type. The pin discription of AC port is below. You should connect exact polarity of AC.

The pinout description of the AC port is as below. You should connect the exact polarity of AC.

Port outlook	Terminal block numbering	Name	Description
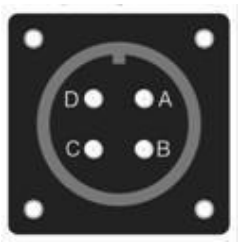	A	AC_H	AC Hot
	B	AC_N	AC Neutral
	C	N.C	Not Connected
	D	F.G	Frame Ground

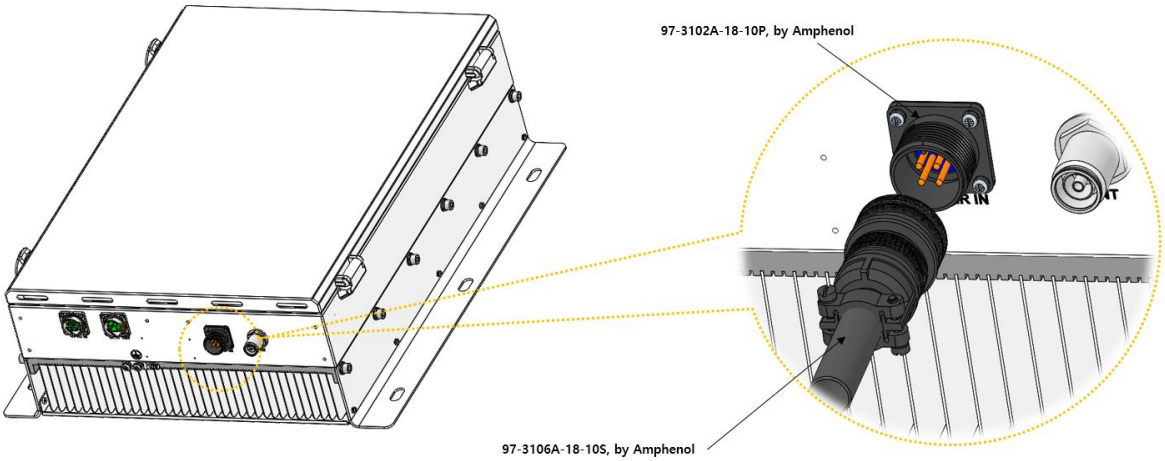

Figure 19. How to install power cable vertical type

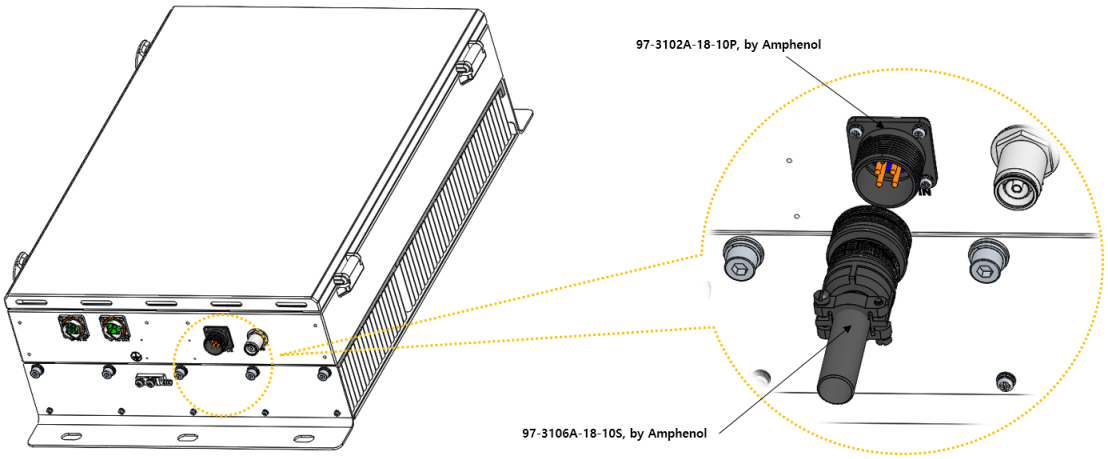

Figure 20. How to install power cable horizontal type

Assembly sequence

1. Insert the power conector
2. Tighten power conector

3.1.5 TW_HROU_4000_TN Ground cabling

The Grounding terminal is located at the bottom of the HROU enclosure, fixed by M6 screws. A compression terminal is attached already when is delivered. The recommended thickness of the cable is AWG#6 copper grounding wire.3

The specification of the compression terminal is like the image below.

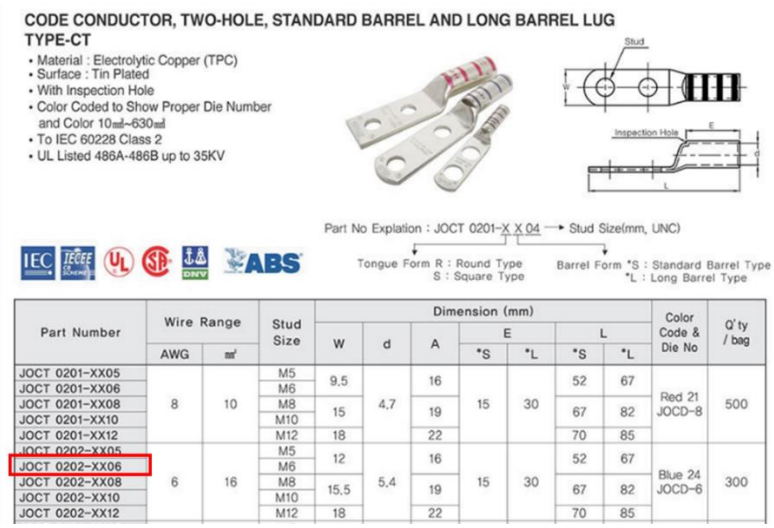

CODE CONDUCTOR, TWO-HOLE, STANDARD BARREL AND LONG BARREL LUG
TYPE-CT

- Material : Electrolytic Copper (TPC)
- Surface : Tin Plated
- With Inspection Hole
- Color Coded to Show Proper Die Number and Color 10㎟~630㎟
- To IEC 60228 Class 2
- UL Listed 486A-486B up to 35KV

Part No Explation : JOCT 0201-X X 04 → Stud Size(mm, UNC)
Tongue Form R : Round Type, S : Square Type
Barrel Form *S : Standard Barrel Type, *L : Long Barrel Type

Part Number	Wire Range		Stud Size	Dimension (mm)							Color Code & Die No	Q'ty / bag
	AWG	㎟		W	d	A	E		L			
							*S	*L	*S	*L		
JOCT 0201-XX05	8	10	M5	9.5	4.7	16	15	30	52	67	Red 21 JOCD-8	500
JOCT 0201-XX06			M6									
JOCT 0201-XX08			M8	15		19			67	82		
JOCT 0201-XX10			M10									
JOCT 0201-XX12			M12	18		22			70	85		
JOCT 0202-XX05	6	16	M5	12	5.4	16	15	30	52	67	Blue 24 JOCD-6	300
JOCT 0202-XX06			M6									
JOCT 0202-XX08			M8	15.5		19			67	82		
JOCT 0202-XX10			M10									
JOCT 0202-XX12			M12	18		22			70	85		

Figure 21. Terminal Information

The required part number is JOCT 16-6 supporting AWG#6. The way to install the grounding cable complies with the below procedures.

3.1.5.1 TW_HROU_4000_TN_V

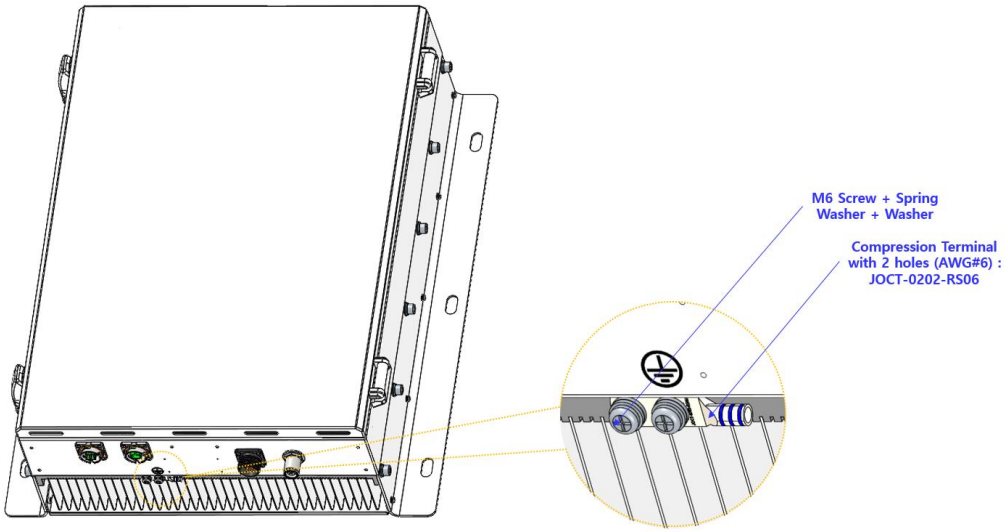

Figure 22. Location of Ground Terminal

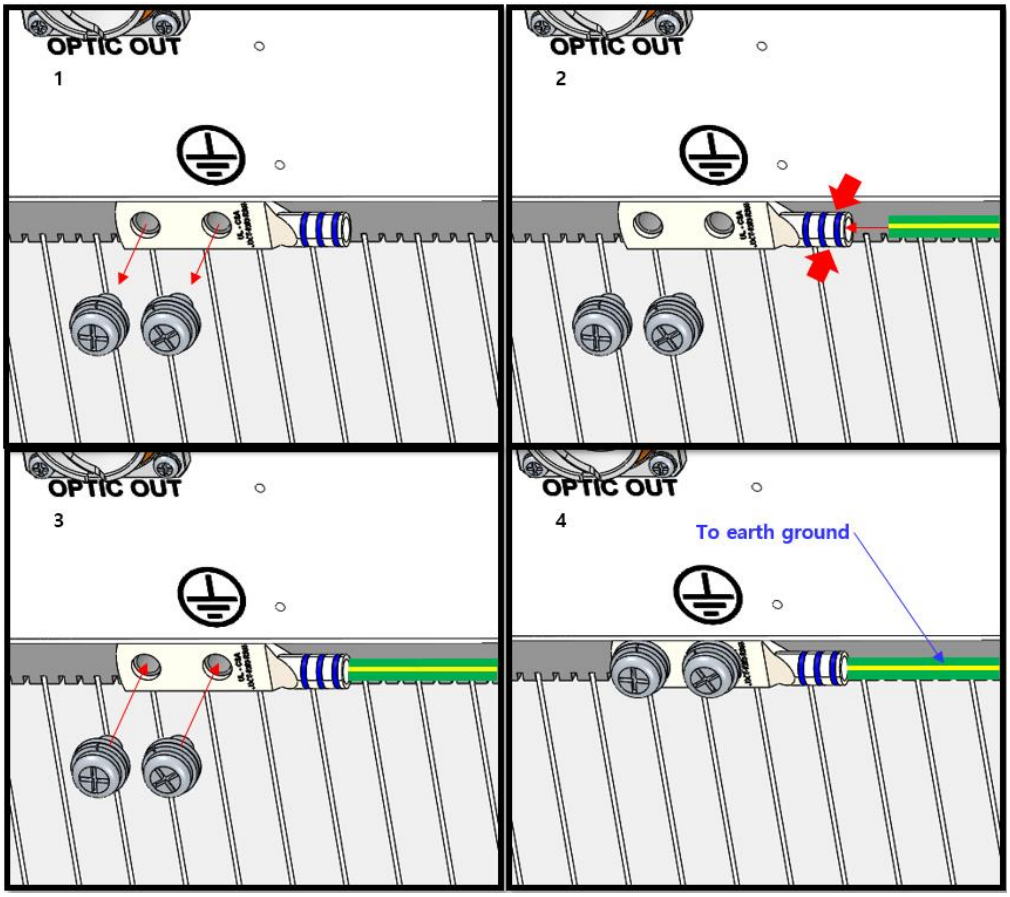

Figure 23. How to install Ground Terminal

The procedures are:

1. Loosen two M6 screws and then take the compression terminal off.
2. Insert an AWG#6 grounding wire into the terminal and then compress the terminal using a tool.
3. Assemble the terminal made in step 2 using two M6 screws.
4. Cut the ground wire to a proper length and connect it to the earth's ground source
   (A round terminal combined with the 16 mm²(6 AWG)-or-thicker wire is for the permanent grounding.)

3.1.5.2 TW_HROU_4000_TN_H

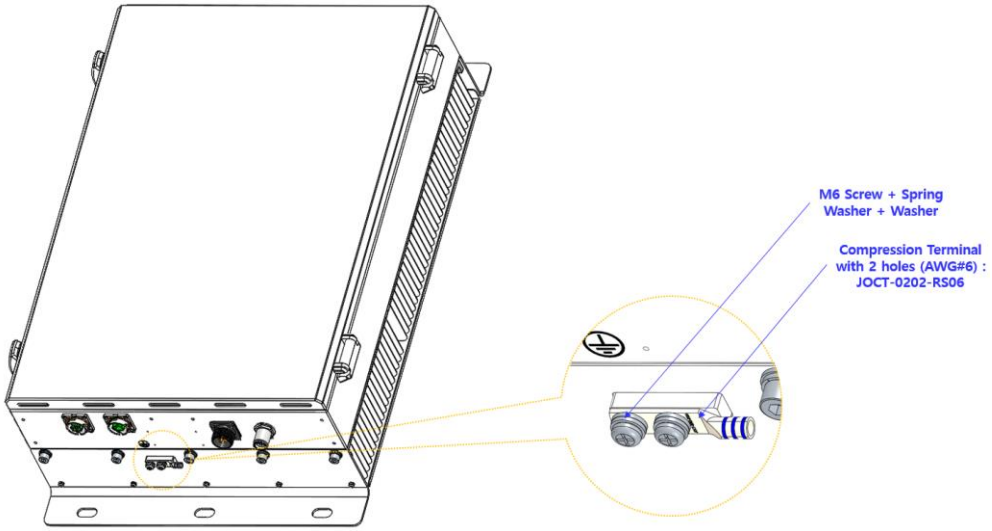

Figure 24. Location of Ground Terminal

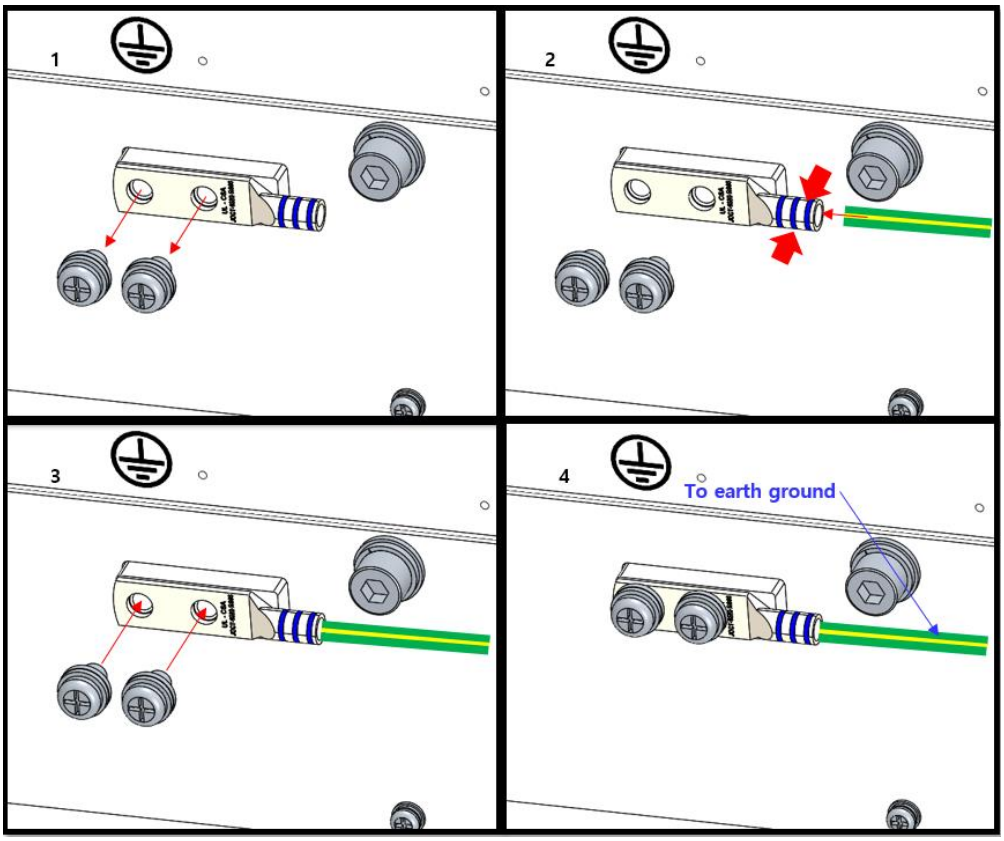

Figure 25. How to install Ground Terminal

The procedures are:

5. Loosen two M6 screws and then take the compression terminal off.
6. Insert an AWG#6 grounding wire into the terminal and then compress the terminal using a tool.
7. Assemble the terminal made in step 2 using two M6 screws.
8. Cut the ground wire to a proper length and connect it to the earth's ground source

   (A round terminal combined with the 16 mm²(6 AWG)-or-thicker wire is for the permanent grounding.)

3.1.6 TW_HROU_4000_TN Optical Cable

The Optical Connector is located at the bottom of the remote unit enclosure. An optical cable can be connected to the HROU by using connectors.

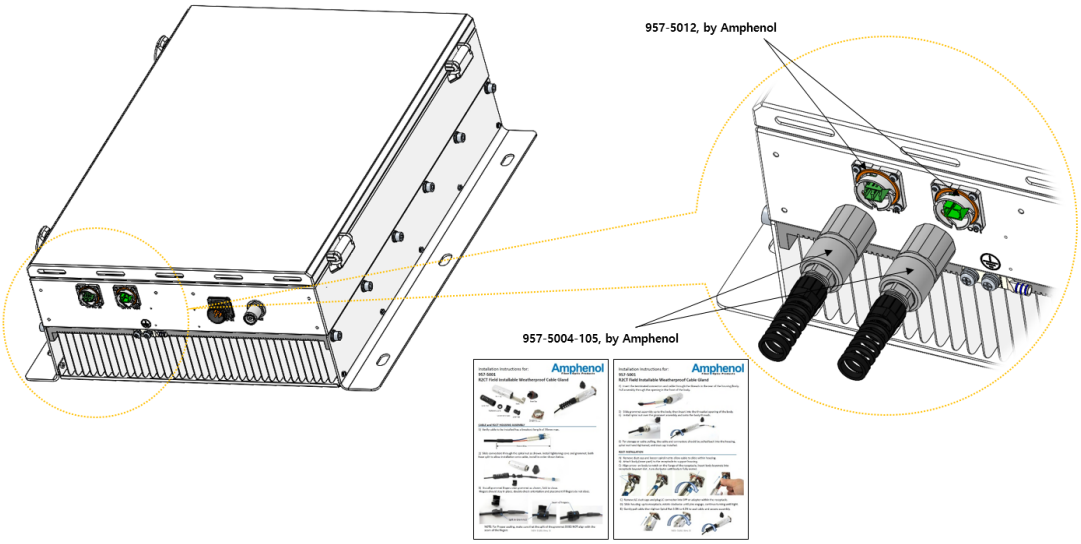

Figure 26. Location of Optical Connector (TW_HROU_4000_V)

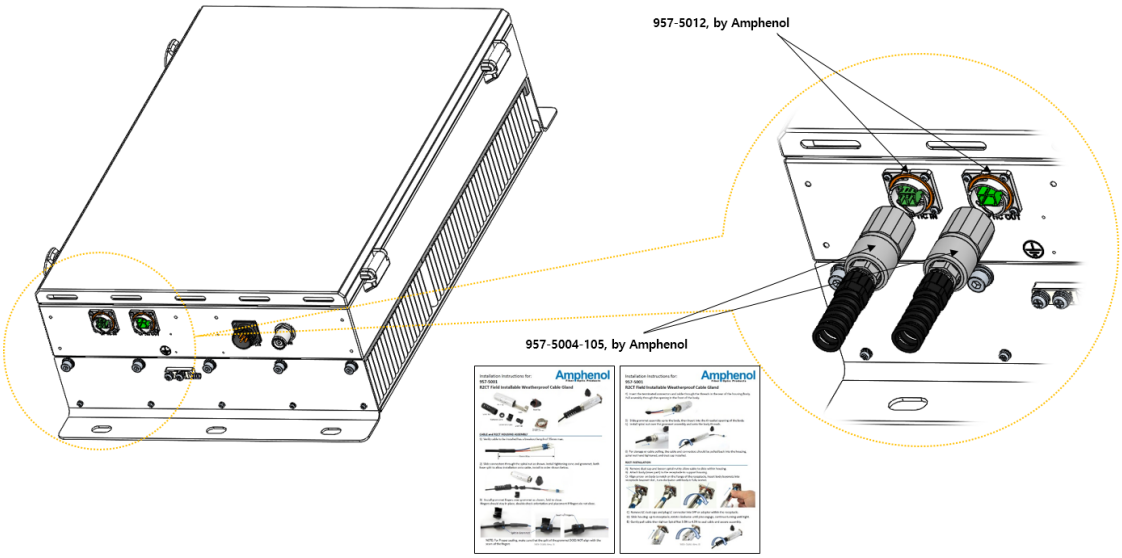

Figure 27. How to install Optical cable (TW_HROU_4000_H)

Assembly sequence

1. Insert the optical cable into the CABLE GLAND
2. Assemble as shown.
3. Tighten the CABLE GLAND.

3.1.7 Mounting of HRDU_4000

TW_HROU_4000_TN has slots to enable up to four HRDU modules to be mounted in.

You can mount an HRDU into the designated slot surely. It is not possible to provide services with an HRDU module alone; you need to connect the HRDU cavity duplexer antenna port with CU's designated port.

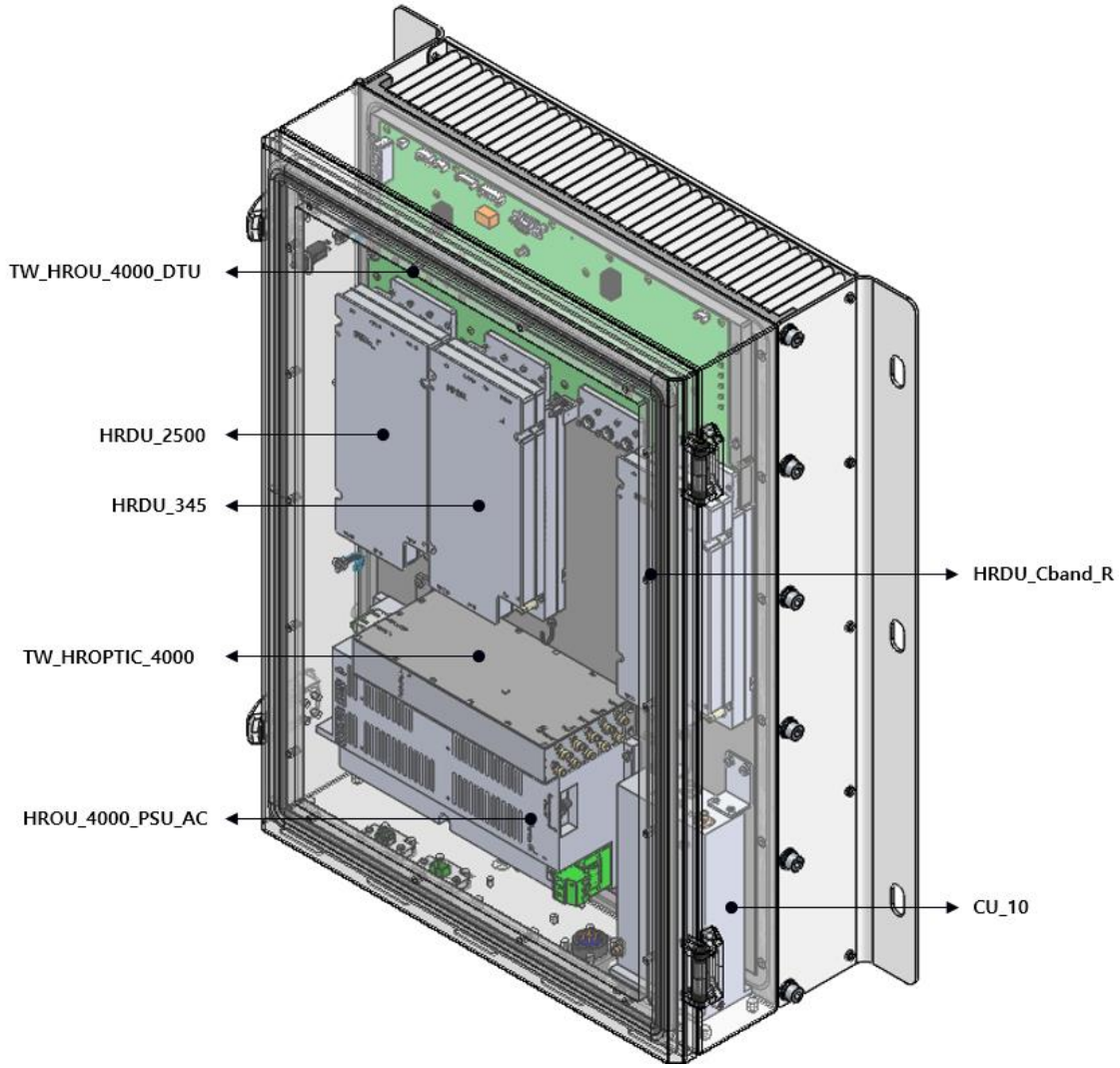

Figure 28. Location of each module in the TW_HROU_4000_TN_V

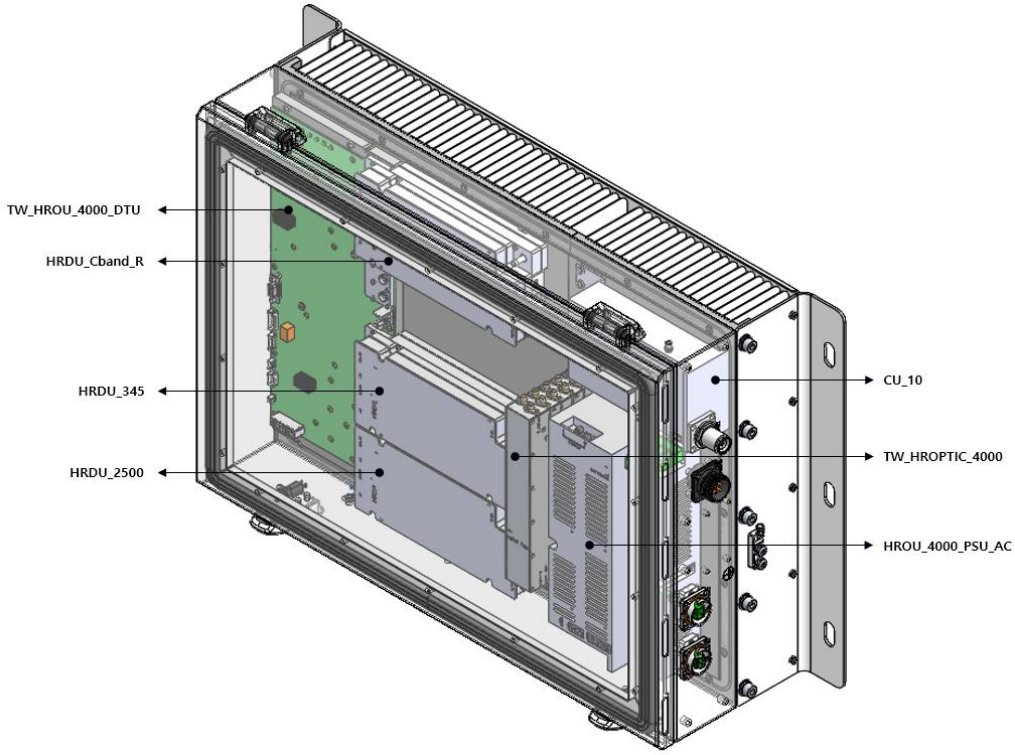

Figure 29. Location of each module in the TW_HROU_4000_TN_H

The remote unit holds a maximum of 4 HRDUs. Guide brackets on the bottom of each HRDU slot simplify installation as described below. MRDU installation requires a #1 tip-sized crosshead screwdriver.

The procedures are:

1. Place the HRDU to be horizontal to the guide pin of the enclosure.
2. Slide the HRDU to fit the corresponding interface location of the DTU and HROPTIC connector.
3. Secure 4 screws with a #1 tip-sized crosshead screwdriver to fasten the HRDU.

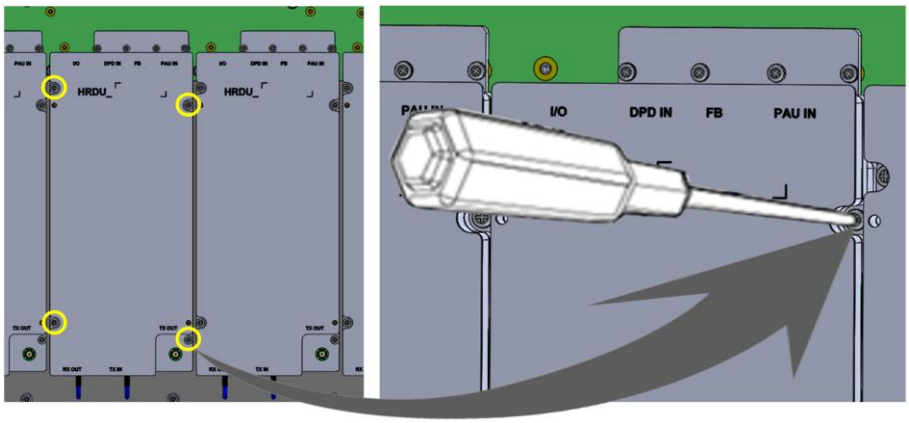

Figure 30.How to mount HRDU