ALLIANCE HROU_4000

User Manual

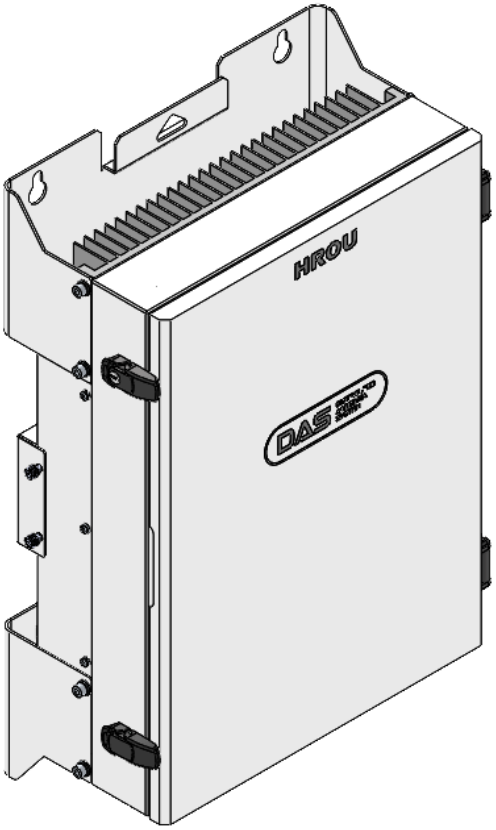

Document Reference:

Version:	V1.0
Document Status:	Release 1
Issue Date:	August 26, 2022
Author:	Yong Hee Kim
Department:	R&D Division Team 2
Authorizing Manager:	Hyun Seok Chae

REVISION HISTORY

Version	Issue Date	No. of Pages	Initials	Details of Revision Changes
V 1.0	Aug. 26, 2022		Original	

Technical Support

SOLiD serial numbers must be available to authorize technical support and/or to establish a return authorization for defective units. The serial numbers are located on the back of the unit, as well as on the box in which they were delivered. Additional support information may be obtained by accessing the SOLiD Tehcnology, Inc. website at www.solid.co.kr or sending an email at sjkim@solid.co.kr

This manual is produced by Global Business Division Team and printed in Korea.

Contents

Section1 Safety & Certification Notice 5

Section2 System Configuration and Functions 8

2.1 High power 5G Remote 8

2.1.1 Specifications of HROU 9

2.1.2 Block Diagram of HROU_4000 10

2.1.2.1 HROU_4000 block diagram 10

2.1.2.2 HROU_4000 inner look 11

2.1.2.3 HROU part list 11

2.1.3 Function by unit 13

2.1.3.1 High Remote Drive Unit (HRDU) 13

2.1.3.2 Remote Power Supply Unit (RPSU) 14

2.1.3.3 Remote Optic (HROPTIC_4000) 15

2.1.3.4 HROU_4000_DTU 15

2.1.3.5 Multiplexer 16

2.1.4 Bottom of HROU_4000 17

2.1.4.1 Functions 17

Section3 System Installation 18

3.1 HROU_4000 Installation 18

3.1.1 Tools 18

3.1.2 HROU_4000 Enclosure installation 18

3.1.3 HROU_4000 Wall Mount Installation 20

3.1.4 HROU_4000 components 21

3.1.5 HROU_4000 Power Cabling 22

3.1.6 HROU_4000 Ground cabling 23

3.1.7 HROU_4000 Optical Cable 26

3.1.8 Mounting of HRDU_4000 27

3.1.9 Replacing a FAN Unit 28

Contents of Figure

Figure 1. HROU_4000 outer Look 8

Figure 2. HROU_4000 Block diagram 10

Figure 3. Inside of Remote Unit 11

Figure 4. HRDU Outer Look 13

Figure 5. AC-DC RPSU Outer Look 14

Figure 6. DC-DC RPSU Outer Look 14

Figure 7. R OPTIC Outer Look 15

Figure 8. HROU_4000_DTU Outer Look 16

Figure 9. Multiplexer Outer Look 16

Figure 10. The Bottom Look of HROU_4000 17

Figure 11. How to install HROU_4000 19

Figure 12. Dimension used to install HROU_4000 on the WALL 20

Figure 13. Procedures of installation 21

Figure 14. How to install power cable 23

Figure 15. Location of Ground Terminal 24

Figure 16. Terminal Information 24

Figure 17. How to install Ground Terminal 25

Figure 18. Location of Optical Connector 26

Figure 19. How to install Optical cable 26

Figure 20. Location of each module in the HROU_4000 27

Figure 21.How to mount HRDU 28

Figure 22. How to change fan units 28

Section1

Safety & Certification Notice

"Only qualified personnel should handle the DAS equipment. Any person involved in installation or service of the DAS should understand and follow these safety guidelines."

- Obey all general and regional installation and safety regulations relating to work on high voltage installations, as well as regulations covering the correct use of tools and personal protective equipment.

- The power supply unit in repeaters contains dangerous voltage levels, which can cause electric shock. Switch the mains off prior to any work in such a repeater. Any local regulations are to be followed when servicing repeaters.

- When working with units outdoors, make sure to securely fasten the door or cover in an open position to prevent the door from slamming shut in windy conditions.

- Use this unit only for the purpose specified by the manufacturer. Do not carry out any modifications or fit any spare parts which are not sold or recommended by the manufacturer. This could cause fires, electric shock, or other injuries.

- Any DAS system or Fiber BDA will generate radio (RF) signals and continuously emit RF energy. Avoid prolonged exposure to the antennas. SOLiD recommends maintaining a 500 cm minimum clearance from the antenna while the system is operating.

- Do not operate this unit on or close to flammable materials, as the unit may reach high temperatures due to power dissipation.

- Do not use any solvents, chemicals, or cleaning solutions containing alcohol, ammonia, or abrasives on the DAS equipment. Alcohol may be used to clean fiber optic cabling ends and connectors.

- To prevent electrical shock, switch the main power supply off prior to working with the DAS System or Fiber BDA. Never install or use electrical equipment in a wet location or during a lightning storm.

- Do not look into the ends of any optical fiber or directly into the optical transceiver of any digital unit. Use an optical spectrum analyzer to verify active fibers. Place a protective cap over any radiating transceiver or optical fiber connector to avoid the potential of radiation exposure.

- Allow sufficient fiber length to permit routing without severe bends.

- For pluggable equipment, make sure to install the socket outlet near the equipment so that it is easily accessible.

- A readily accessible disconnect device shall be incorporated external to the equipment.

- The power of this system shall be supplied through wiring installed in a normal building.
If powered directly from the mains distribution system, it shall be used with additional protection, such as an overvoltage protection device

- Only 50 ohm rated antennas, cables, and passive equipment shall be used with this remote. Any equipment attached to this device not meeting this standard may cause degradation and unwanted signals in the bi-directional system. All components connected to this device must operate in the frequency range of this device.

- Only 50 ohm rated antennas, cables, and passive components operating from 150 - 3 GHz shall be used with this device.

- The head end unit must always be connected to the Base Station using a direct cabled connection. This system has not been approved for use with a wireless connection via server antenna to the base station.

- Access can only be gained by SERVICE PERSONS or by USERS who have been instructed about the reasons for the restrictions applied to the location and about any precautions that shall be taken; access is through the use of a TOOL or lock and key, or other means of security, and is controlled by the authority responsible for the location.

- Notice! Be careful not to touch the Heat-sink part due to the high temperature.

- Signal booster warning label message should include

WARNING. This is **NOT** a **CONSUMER** device. It is designed for installation by **FCC LICENSEES** and **QUALIFIED INSTALLERS**. You **MUST** have an **FCC LICENSE** or express consent of an FCC Licensee to operate this device. Unauthorized use may result in significant forfeiture penalties, including penalties in excess of $100,000 for each continuing violation.

- Certification

- **FCC: This equipment complies with the applicable sections of Title 47 CFR Parts 15, 27**
- **Use of unauthorized antennas, cables, and/or coupling devices not conforming with ERP/EIRP and/or indoor-only restrictions is prohibited.**
  - Home/personal use is prohibited.
- UL/CUL: This equipment complies with UL and CUL 1950-1 Standard for safety for information technology equipment, including electrical business equipment
- FDA/CDRH: This equipment uses a Class 1 LASER according to FDA/CDRH Rules. This product conforms to all applicable standards of 21 CFR Chapter 1, Subchapter J, Part 1040

FCC Part 15.105 statement

This equipment has been tested and found to comply with the limits for a Class A digital device, pursuant to part 15 of the FCC Rules. These limits are designed to provide reasonable protection against harmful interference when the equipment is operated in a commercial environment. This equipment generates, uses, and can radiate radio frequency energy and, if not installed and used in accordance with the instruction manual, may cause harmful interference to radio communications. Operation of this equipment in a residential area is likely to cause harmful interference in which case the user will be required to correct the interference at his own expense.

FCC Part 15.21 statement

Any changes or modifications not expressly approved by the party responsible for compliance could void the user's authority to operate this equipment.

RF Exposure Statement

This device must be professionally installed. The antenna(s) must be installed such that a minimum separation distance of at least **4.5 m** is maintained for **outdoor use** [e.g. Rooftop of the building, antenna gain : SISO (12 dBi), MIMO (15 dBi)] and a minimum separation distance of at least **60 cm** is maintained for indoor use [antenna gain considering the cable loss : SISO (-16 dBi), MIMO (-13 dBi)] between the radiator (antenna) and all persons at all times . This device must not be co-located or operating in conjunction with any other antenna or transmitter.

Section2

System Configuration and Functions

2.1 High power 5G Remote

HROU_4000 is a remote unit supporting both SISO and MINO service of C-Band. HROU_4000 receives TX optical signals from ODU and converts them into RF signals. The converted RF signals are amplified through high-power amps in the corresponding HRDU bands combined with UDCU, PAU, and Cavity duplexer, and then radiated to the antenna port.

When receiving RX signals through the antenna port, this unit filters out-of-band signals in a corresponding HRDU and sends the results to R-OPTIC to make an electronic-to-optical conversion. After conversion, the signals are sent to the upper device of ODU. HROU_4000 can be equipped with up to four HRDUs (High Remote Drive Unit) and each module supports a single band only.

HROU_4000 has a digital board to improve the PAU's linearity by performing DPD (Digital Pre-Distortion). Also, CFR works to improve the PAPF performance. Since C-Band and Auction 110 band uses TDD technology, the digital board of HROU is also equipped with the SDM to acquire the synchronization for 5G NR TDD signals.

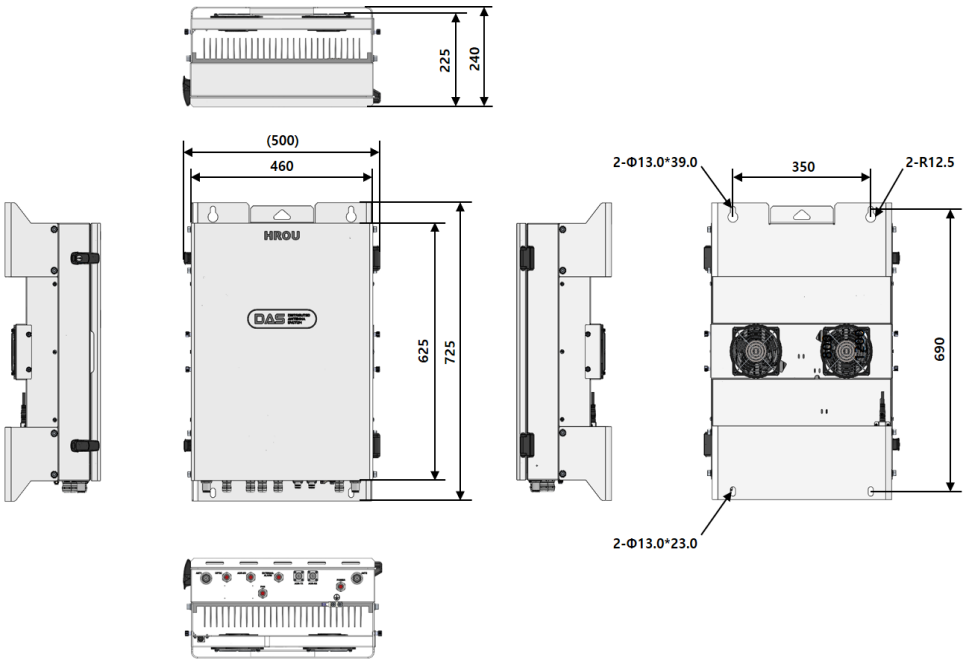

Figure 1. HROU_4000 outer Look

2.1.1 Specifications of HROU

Item	Spec.		Remark
	HROU_4000		
The nominal bandwidth	HRDU_Cband HRDU_Cband_M	280MHz	3700 - 3980MHz
	HRDU_345 HRDU_345_M	100MHz	3450 - 3550MHz
Input power	TX	LPOI : -19dBm	Each port
	RX	HROU : -50dBm	
Output power	TX	3700-3980 MHz	20 / 40 MHz (+43dBm+1dBm) 60 / 80 / 100MHz (+45dBm+1dBm)
		3450-3550 MHz	SISO : +43dBm+1dBm, MIMO: +46 dBm+1dBm
	RX	-23dBm+1dB	
System gain	TX	64dB max	
	RX	30dB max	25dB Gain control
Spurious emissions	SISO system	≤ -13dBm	
	MIMO system	≤ -13dBm @ summing emissions	**Note 1
VSWR	1.69:1 typical, 1.80:1 max.		
Input/ Output Impedance	50 ohm		
External alarm interface	5pin connector on the bottom panel		
Optical connector	SC/APC, step Ferrule, waterproof, single mode fiber		
Craft port	Serial interface RS-232 9 pin D-sub male		
Monitoring port	-40dB(±3dB), SMA female, TX output Only		
Weight	88 lbs. (40 Kg) max (fully loaded)		Common Part (R-optic, DPD Board)
Power consumption	120W		
Temperature range	-25°C to +55°C/ -13 to 131°F		Ambient Temperature
Humidity range	0% ~ 90%		Non-condensing
Ingress protection	UL Type 4X		
Sealing (Remote Unit)	IEC 60 529 EN 60 529		IP66 Complaint
Size(mm)	28.5“ x 19.7“ x 9.5“ (725 x 500 x 240mm)		Including Bracket

**Note1 - Summing emissions: The FCC’s emission limit applies to the total emissions from all outputs of the transmitter of composite system transmitters. Thus, emission measurements from the transmitter outputs must be summed before comparing measured emissions to the emission limit. (KDB 662911)

2.1.2 Block Diagram of HROU_4000

2.1.2.1 HROU_4000 block diagram

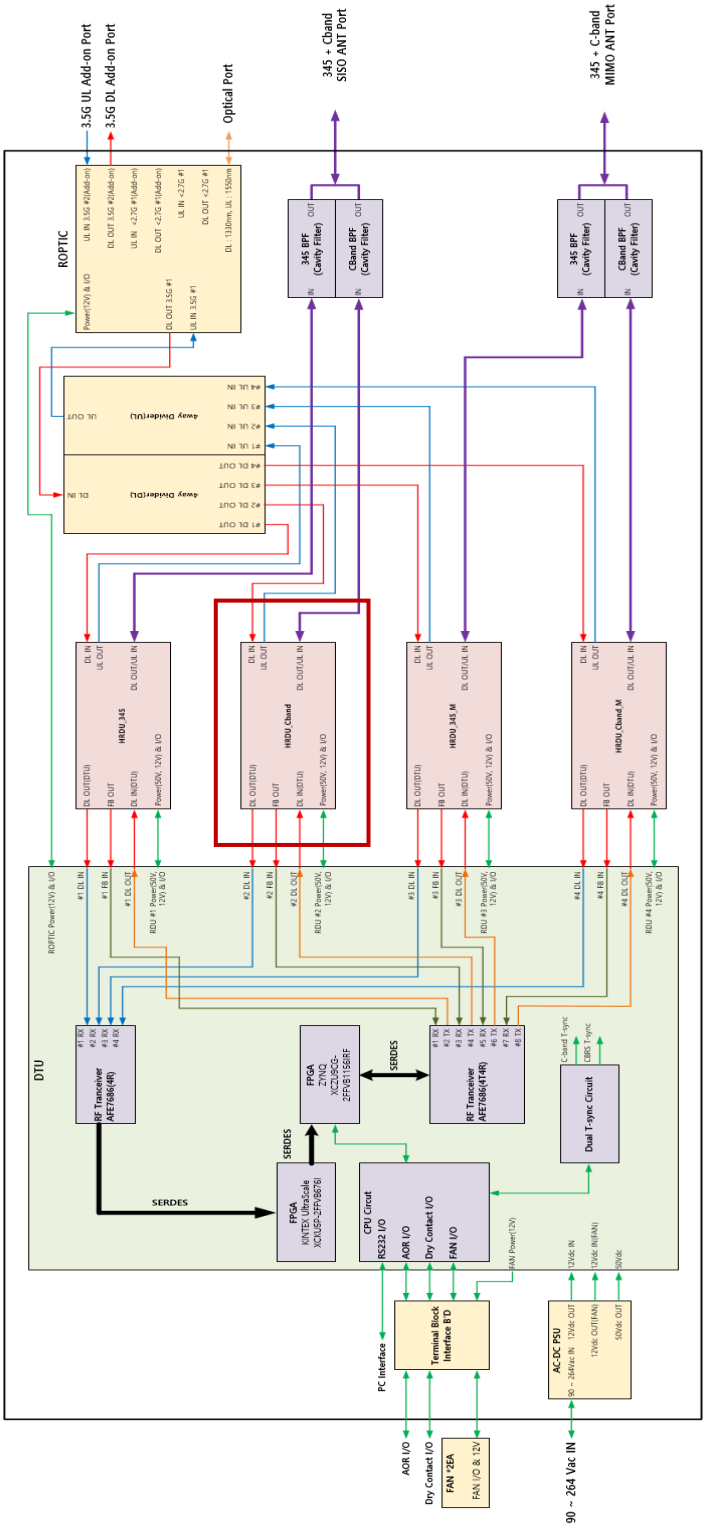

Figure 2. HROU_4000 Block diagram

2.1.2.2 HROU_4000 inner look

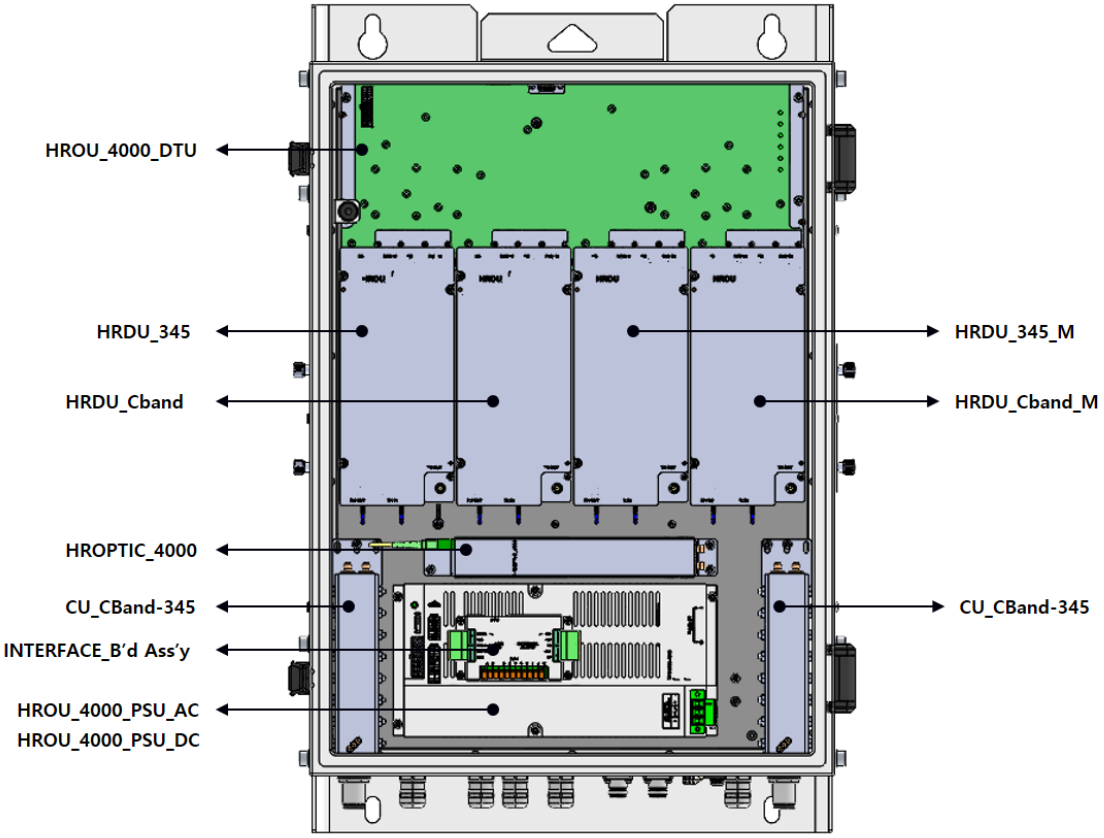

Figure 3. Inside of Remote Unit

2.1.2.3 HROU part list

No.	Unit	Description	Remark
1	HRDU X4	**High Remote Drive Unit** Consists of UDCU and PAU Filters and amplifies TX signals; Filters and amplifies RX signals in low noise amplifier;	Optional Max 4
2	HROU_4000_PSU (AC)	**Remote Power Supply Unit** Input power: 110 VAC/220VAC (90~264V) Output power: +50.2, +12V, VDC	
	HROU_4000_PSU (DC)	**Remote Power Supply Unit** Input power: -48 VDC (-42 ~ -56V) Output power: +50.2, +12V, VDC	

3	HROPTIC_4000	**Remote Optic** Makes RF conversion of TX optical signals; Converts RX RF signals into optical signals; Compensates optical loss; 5dBo optical link between ODU(OM4) and ROU; 10dBo optical link between ODU(OM1) and ROU; Fiber Connector: SC/APC Connector; Optical Wavelength: 1310/1330/1550 WDM; Communicates with BIU/OEU through the FSK modem	
4	HROU_4000_DTU	**Remote Central Processor & Digital signal processor Unit** Controls signal of each unit; Monitors BIU/ODU/OEU status through FSK modem communication; Performs DPD to improve the PAU efficiency; CFR is a technique used to reduce the PAPR of the transmitted signals; Acquires the synchronization for 5G NR TDD signals	
5	CU_Cband-345	**Multiplexer1** This integrated combiner unit combines C-band and auction 110 for the output to a single antenna connection.	
6	Enclosure	Enclosure to satisfy NEMA4 (IP66); UL Type 4X Wall mounting type (Vertical Mount) FAN	
7	Interface board Ass'y	External alarm interface FAN interface	

2.1.3 Function by unit

2.1.3.1 High Remote Drive Unit (HRDU)

When receiving TX signals from each band through Remote Optic, HRDU filters the signals and amplifies them with High Power Amplifier. The unit also filters RX signals given through a cavity filter and amplifies them to send the signals to Remote Optic. In the unit, there is ATT to adjust the gain. An HRDU consists of a UDCU and a PAU like the below figure and all modules are merged into one package.

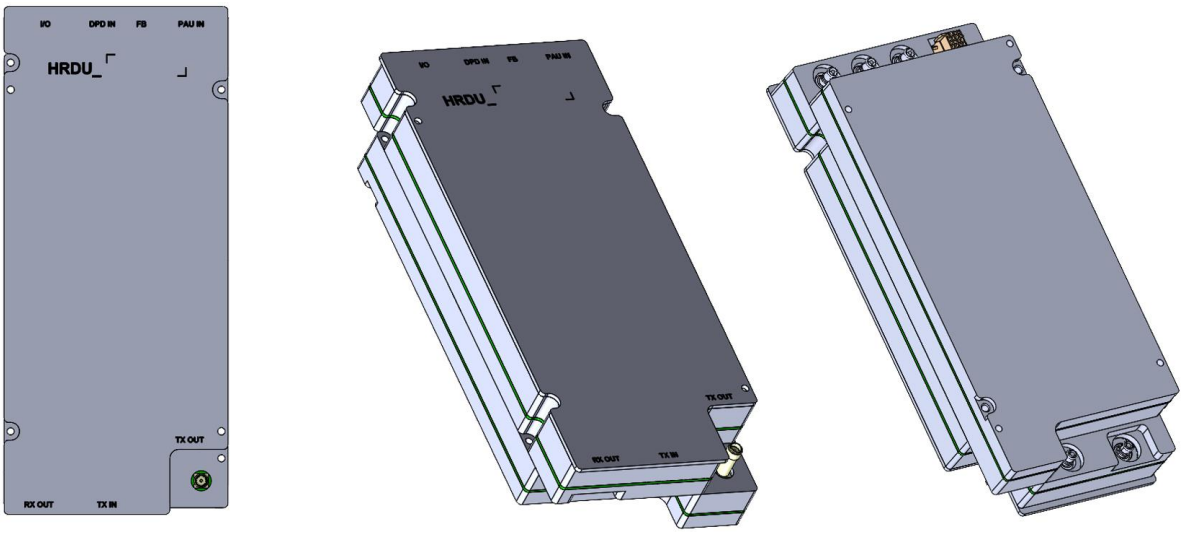

Figure 4. HRDU Outer Look

HRDU devices are varied by each frequency band, including the following:

No	Unit Naming	Description	Frequency (Bandwidth)	
			TX	RX
1	HRDU_Cband	Single band	3700 – 3980MHz	
2	HRDU_Cband_M	Single band	3700 – 3980MHz	
3	HRDU_345	Single band	3450 – 3550MHz	
4	HRDU_345_M	Single band	3450 – 3550MHz	

2.1.3.2 Remote Power Supply Unit (RPSU)

There are 2 types of RPSU in the HROU to supply active modules in the enclosure and receive power from the external.

They are the DC/DC PSU receiving input -48V and the AC/DC PSU receiving input 110V/220V from external.

RPSU has a circuit brake to turn the power ON/OFF and has an LED indicator at the top to check if the input power is normally supplied.

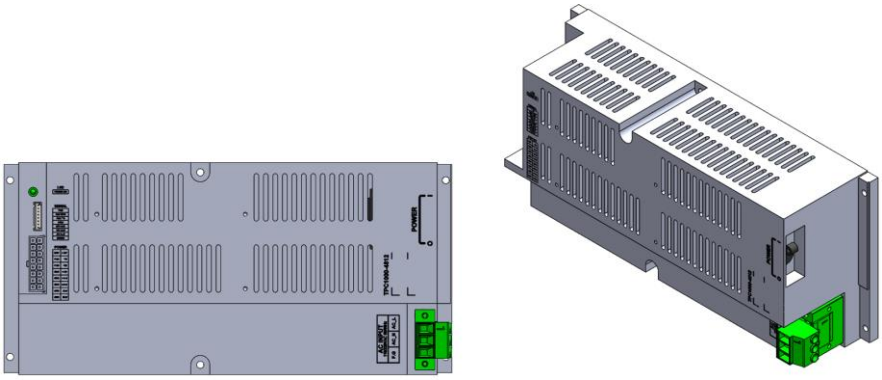

Figure 5. AC-DC RPSU Outer Look

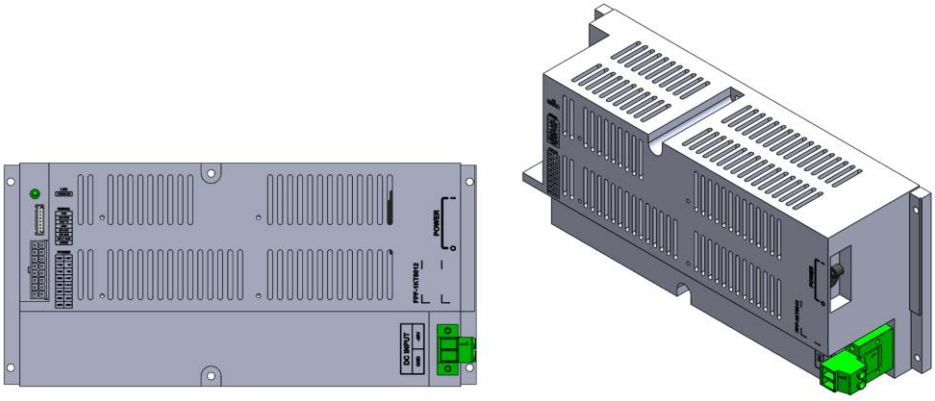

Figure 6. DC-DC RPSU Outer Look

Functions:

- Provides a circuit breaker to turn the AC power ON/OFF
- Provides DC power to DPD board, HROPTIC_4000, HRDU, and FAN Unit
- LED indicators to show the alarm status of the PSU

Caution

DOUBLE POLE/NEUTRAL FUSING

2.1.3.3 Remote Optic (HROPTIC_4000)

Remote Optic converts optical signals into RF signals and performs vice versa. It also has internal ATT for optical compensation to compensate for optical cable loss. It provides two paths in pairs (TX/RX) to transport RF signal to ADD On port.

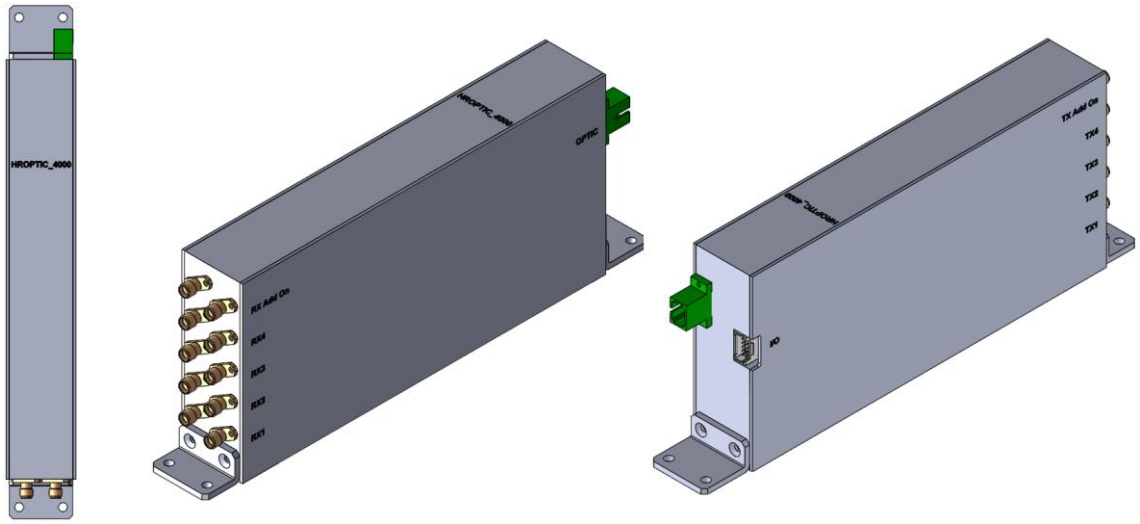

Figure 7. R OPTIC Outer Look

2.1.3.4 HROU_4000_DTU

Remote Central Processor Unit (RCPU)

HROU_4000_DTU can monitor and control each module of HROU_4000. This unit receives and analyzes upper communication data from Remote Optic and reports the unit's value to upper devices.

On the front of the module, it has LED indicators to show system status, letting you check any abnormalities at a time. On the same front, it also has communication LED Indicators to show communication status with upper devices. Through the local port, the unit enables you to check and control device status through a PC or laptop.

Digital transmission Unit (DTU)

HROU_4000_DTU performs DPD to improve the HRDU PAU efficiency. Also, CFR is used in DTU as a technique to reduce the PAPR of the transmitted signal. HROU_4000_DTU also acquires the synchronization for 5G NR TDD signals.

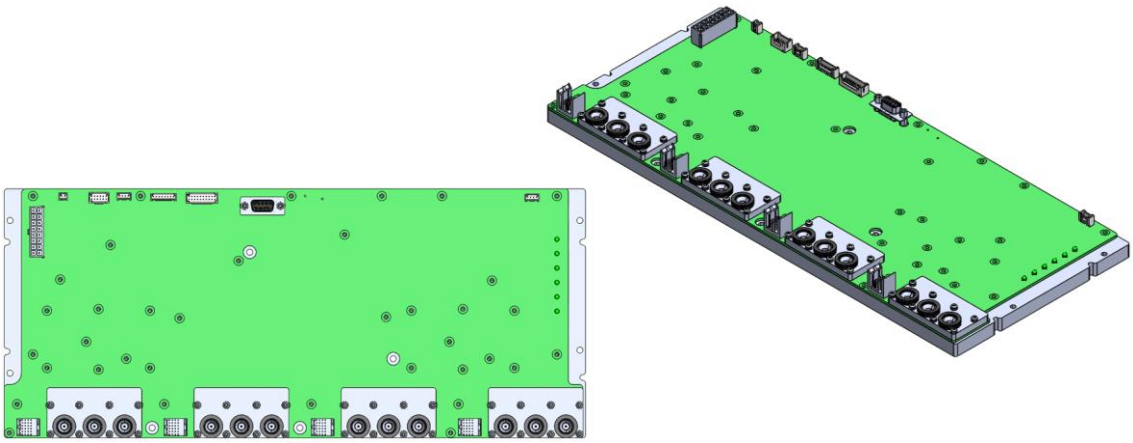

Figure 8. HROU_4000_DTU Outer Look

2.1.3.5 Multiplexer

A multiplexer is called a Combine Unit (CU) since it works as a module to combine or distribute multiple signals into one or two antennas. This device has a port to combine multiple signals. You need to connect the input and output ports of RDU to the corresponding port of the multiplexer.

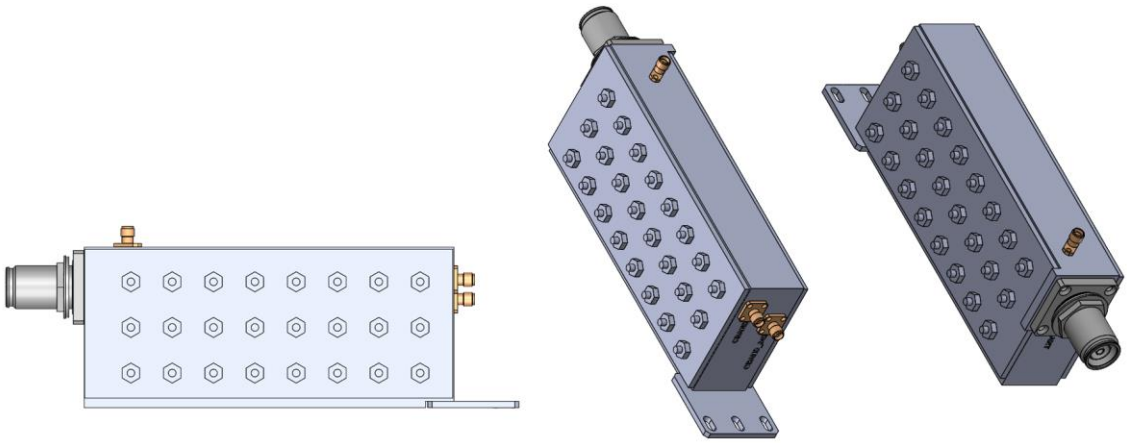

Figure 9. Multiplexer Outer Look

2.1.4 Bottom of HROU_4000

2.1.4.1 Functions

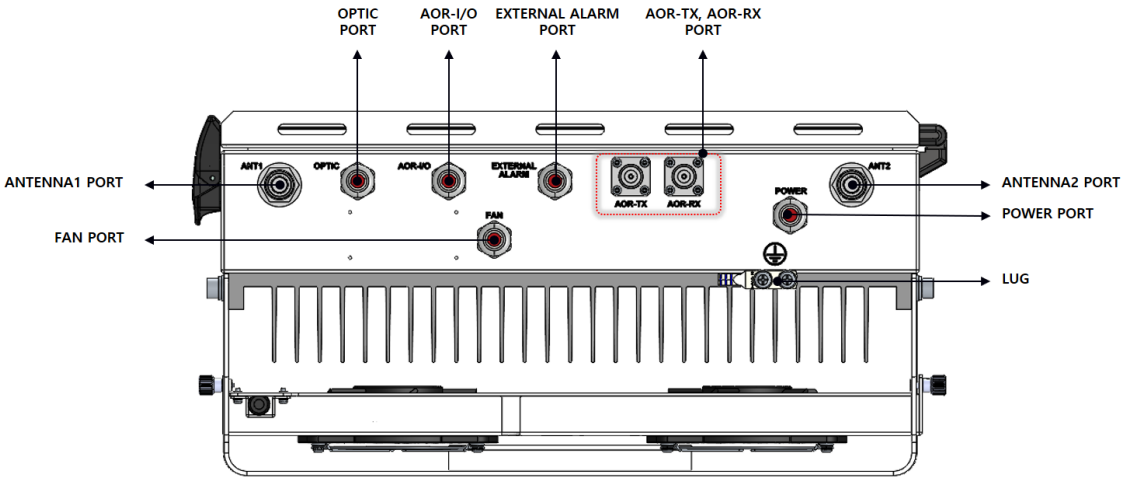

Figure 10. The Bottom Look of HROU_4000

No	Port	QTY	Remark
1	Optic Port	1EA	SC/APC, Waterproof Optic Input port
2	T/RX RF Port	2EA	N Type-Female Connected to transmit TX to AOR and receive RX signals from ARU.
3	ANT1	1EA	DIN-type female_CU SISO port
4	ANT2	1EA	DIN-type female_CU MIMO port
7	Power IN	1EA	Waterproof, AC Power IN or DC Power IN
9	FAN port	1EA	Waterproof-Con
10	GND Lug Port	1EA	Terminal for system ground
11	External Alarm Port	1EA	Terminal for dry contact
12	I/O Port	1EA	Port to communicate with AOR

Section3 System Installation

3.1 HROU_4000 Installation

This chapter describes how to install each unit and optical cable, along with the power cabling method. In detail, the chapter describes how to install shelves or enclosures of each unit, the power cabling method, and the optical cabling and RF interface. Furthermore, by showing the power consumption of modules installed in each unit, it presents the power cabling budget in a simple way. Then, how many components are required to install each unit and for the expansion is described in this chapter.

3.1.1 Tools

The tools needed for the installation are described in the table below.

No	Tools	Q'ty	Specification	Remark
1		1	+ (crosshead), 3Ø Length is more than 20mm	For fixing HRDU
2		1	22mm	To tighten the antenna port
3		1	8mm	To CU from HRDU

3.1.2 HROU_4000 Enclosure installation

HROU is designed to be water- and dirt-proof. The unit has the structure of a one-body enclosure. It satisfies water-proof and quake-proof standards equivalent to NEMA4 (IP66). HROU_4000 can be attached using a wall-mountable bracket. HROU_4000 can be mounted either on a wall or a pole.

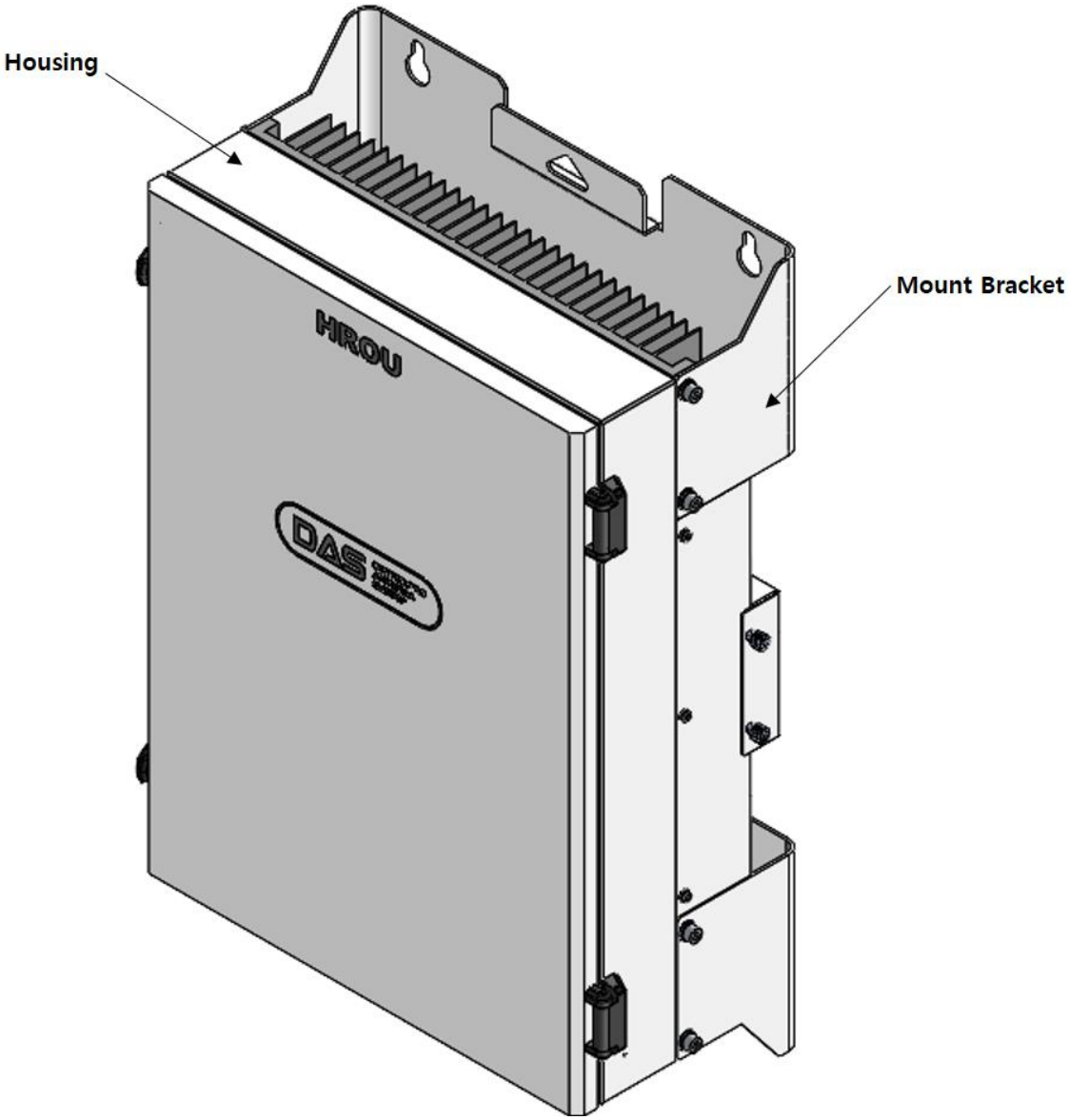

Figure 11. How to install HROU_4000

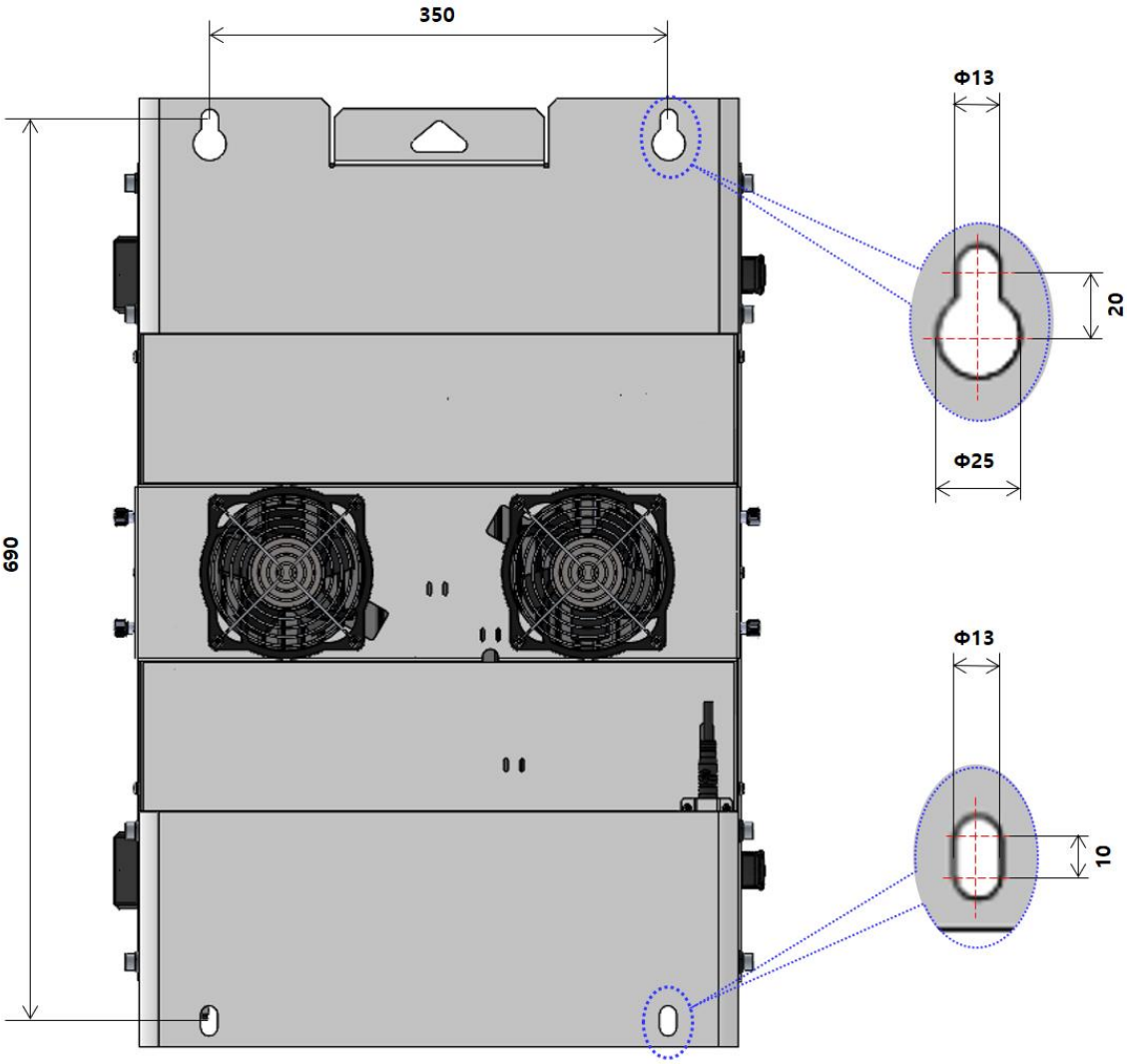

Figure 12. Dimension used to install HROU_4000 on the WALL

3.1.3 HROU_4000 Wall Mount Installation

HROU's installation bracket is attached to the enclosure when HROU is delivered. Users do not need to remove the bracket to install the enclosure. Simply secure four M12 mounting bolts tightly as the procedures below:

1. Install 2 of the M12 mounting bolts roughly halfway on the enclosure and install the enclosure over the bolts and secure the bolts tightly.
2. Install 2 of the M12 mounting bolts at the bottom of the enclosure and secure them tightly.

Figure 13. Procedures of installation

3.1.4 HROU_4000 components

HROU_4000 has the following components:

No.	Unit	Description	Remark
Common Part	Enclosure	Including Wall mounting bracket	1EA
	HROU_4000_DTU	-	1EA
	HROPTIC_OPTIC	-	1EA
	HROU_PSU	AC 110/220V or DC -48V	1EA
	Interface_B'd Ass'y	FAN/External Alarm interface	1EA
	FAN UNIT	2 FANs are inside	1EA
	CU_Cband-345	-	2EA
Optional Part	HRDU	HRDU_Cband, HRDU_Cband_M, HRDU_345, HRDU_345_M	Max 4EA

The common part of HROU should have an enclosure and it is equipped with HROU_4000_DTU to inquire and control the state of each module, R_OPTIC to make both electronic-optical and optical-electronic conversions, and RPSU to supply power to HROU. HROU should have a power cable for the external rectifier or to supply the required power.

In addition, HRDU can be mounted and removed to provide service for the desired band.

3.1.5 HROU_4000 Power Cabling

AC Power

HROU_4000 supports 110V/220V as AC input power. Provided outside power cable is only one type with AWG#16. Power cable is provided without a power plug and it should be attached to a power plug based on the nation's power plug type.

The pinout description of the AC port is as below. You should connect the exact polarity of AC.

Port outlook	Terminal block numbering	Name	Description
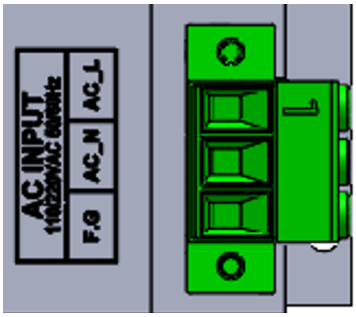	1	AC_H	AC Hot
	2	AC_N	AC Neutral
	3	F.G	Frame Ground

DC Power

HROU_4000 supports only -48V as DC input power. Provided outside power cable is only one type. The pinout description of the DC port is as below. You should connect the exact polarity of DC.

Port outlook	MS Connector numbering	Name	Description
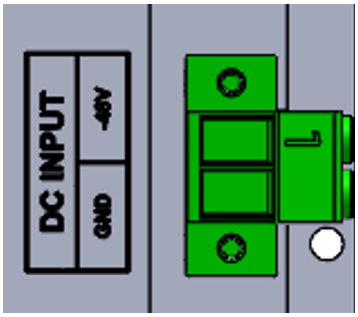	1	-V	-48V
	2	GND	Ground

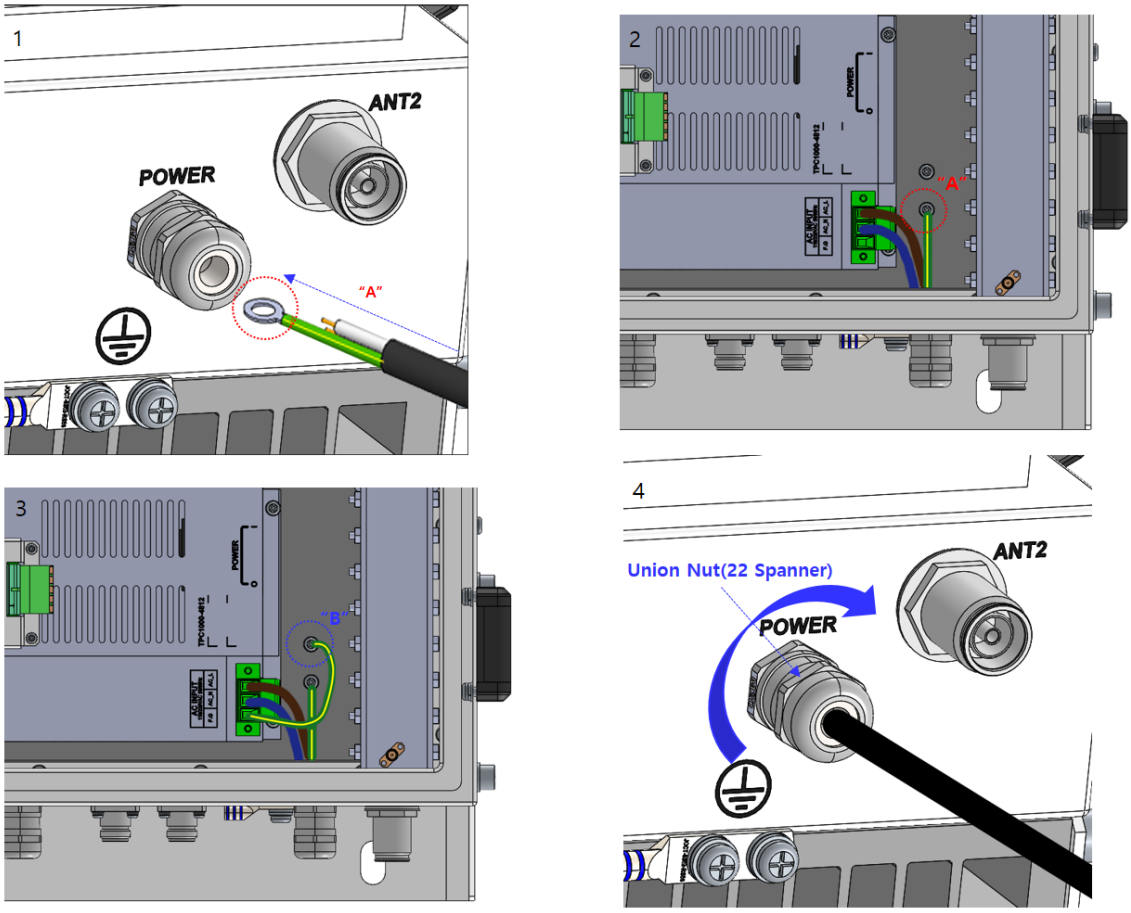

Figure 14. How to install power cable

Assembly sequence

1. Insert the power cable into the CABLE GLAND
2. Assembly as shown ("A"=M4 LUG)
3. As shown in the GrOUND CABLE graphic ("B"=M4 LUG)
4. Tighten CABLE GLAND NUT (Torque = 5.5N·m)

3.1.6 HROU_4000 Ground cabling

The Grounding terminal is located at the bottom of the HROU enclosure, fixed by M6 screws. A compression terminal is attached already when is delivered. The recommended thickness of the cable is AWG#6 copper grounding wire.

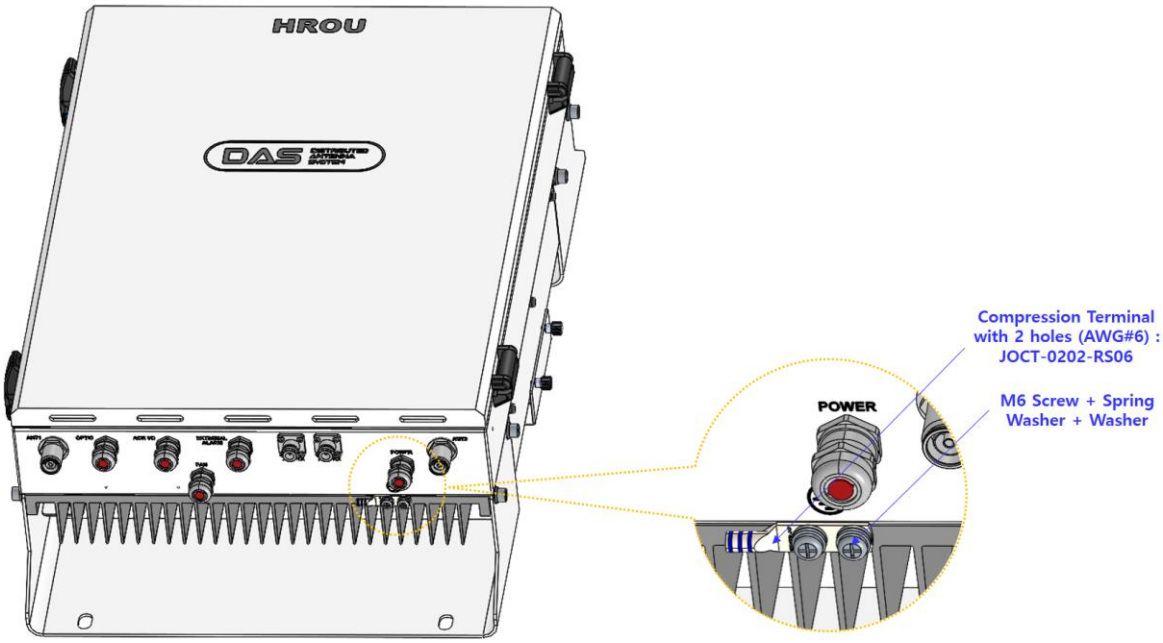

Figure 15. Location of Ground Terminal

The specification of the compression terminal is like the image below.

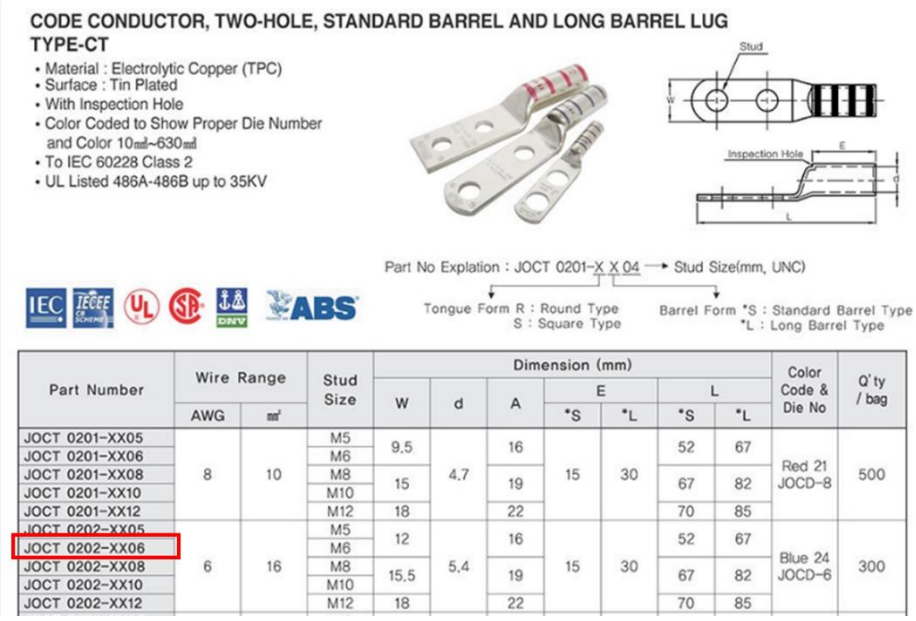

CODE CONDUCTOR, TWO-HOLE, STANDARD BARREL AND LONG BARREL LUG TYPE-CT

- Material : Electrolytic Copper (TPC)
- Surface : Tin Plated
- With Inspection Hole
- Color Coded to Show Proper Die Number and Color 10㎟~630㎟
- To IEC 60228 Class 2
- UL Listed 486A-486B up to 35KV

Stud
Inspection Hole

Part No Explation : JOCT 0201-X X 04 → Stud Size(mm, UNC)

Tongue Form R : Round Type
S : Square Type

Barrel Form *S : Standard Barrel Type
*L : Long Barrel Type

Part Number	Wire Range		Stud Size	Dimension (mm)							Color Code & Die No	Q'ty / bag
				W	d	A	E		L			
	AWG	㎟					*S	*L	*S	*L		
JOCT 0201-XX05	8	10	M5	9.5	4.7	16	15	30	52	67	Red 21 JOCD-8	500
JOCT 0201-XX06			M6									
JOCT 0201-XX08			M8	15		19			67	82		
JOCT 0201-XX10			M10									
JOCT 0201-XX12			M12	18		22			70	85		
JOCT 0202-XX05	6	16	M5	12	5.4	16	15	30	52	67	Blue 24 JOCD-6	300
JOCT 0202-XX06			M6									
JOCT 0202-XX08			M8	15.5		19			67	82		
JOCT 0202-XX10			M10									
JOCT 0202-XX12			M12	18		22			70	85		

Figure 16. Terminal Information

The required part number is JOCT 16-6 supporting AWG#6. The way to install the grounding cable complies with the below procedures.

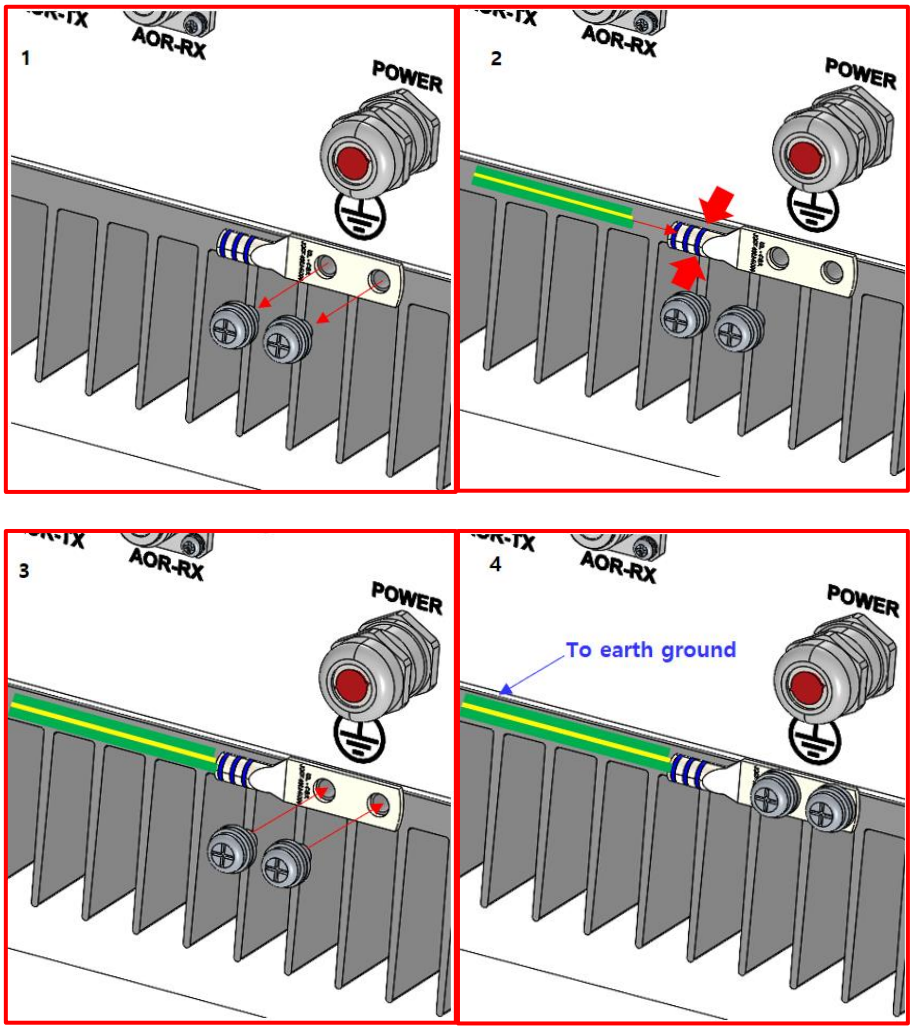

Figure 17. How to install Ground Terminal

The procedures are:

1. Loosen two M6 screws and then take the compression terminal off.
2. Insert an AWG#6 grounding wire into the terminal and then compress the terminal using a tool.
3. Assemble the terminal made in step 2 using two M6 screws.
4. Cut the ground wire to a proper length and connect it to the earth's ground source

   (A round terminal combined with the 16 mm²(6 AWG)-or-thicker wire is for the permanent grounding.)

3.1.7 HROU_4000 Optical Cable

The Optical Connector is located at the bottom of the remote unit enclosure. An optical cable can be connected to the HROU by using connectors.

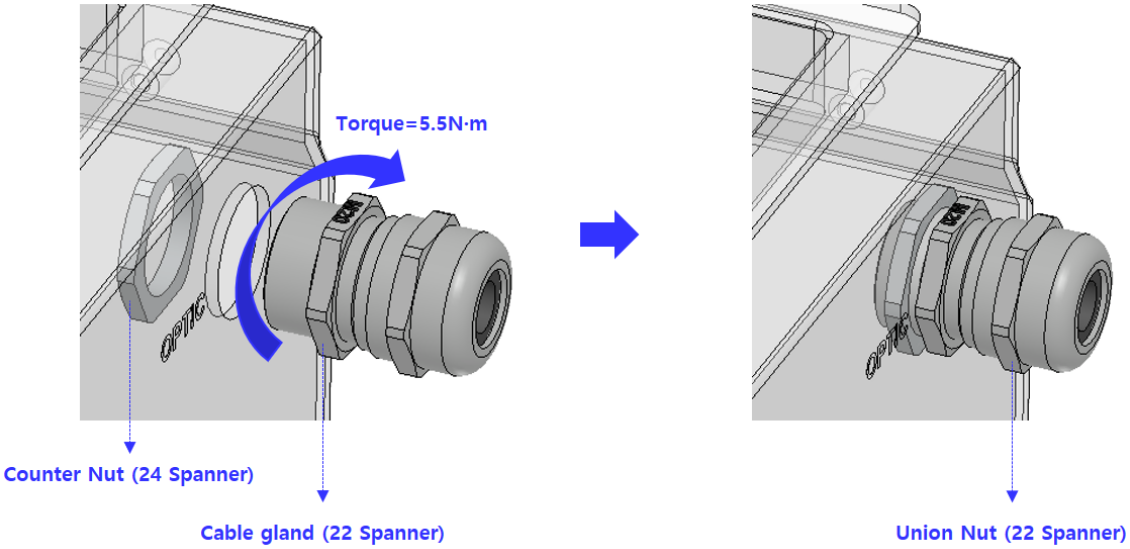

Figure 18. Location of Optical Connector

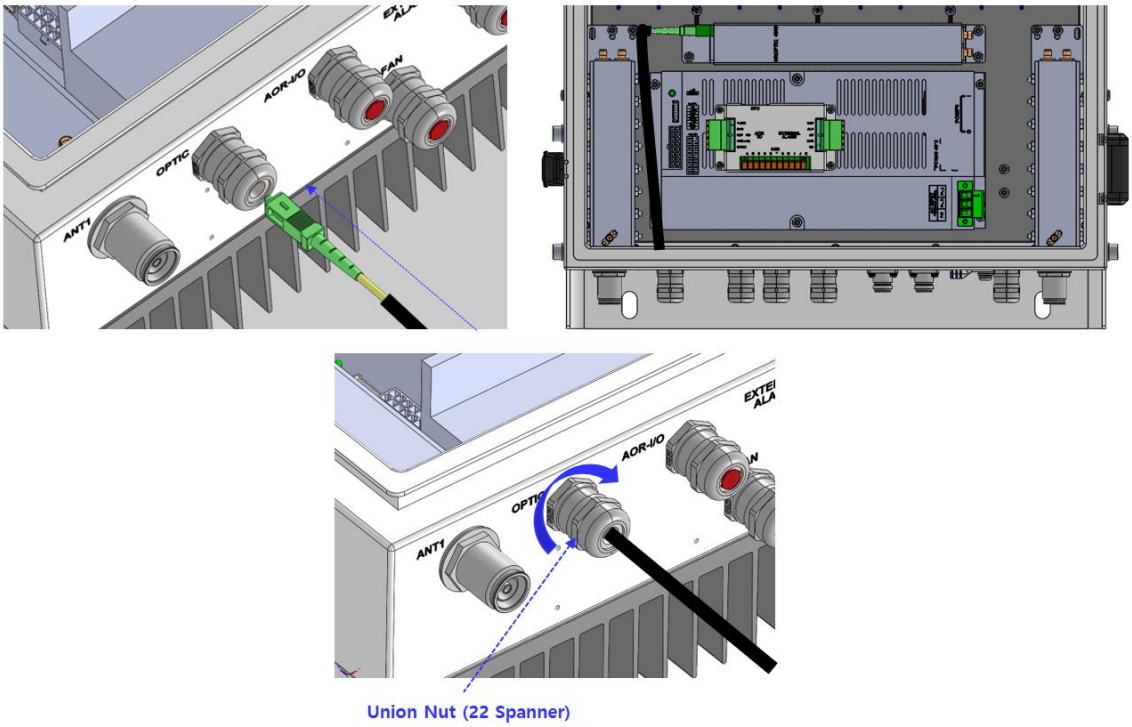

Figure 19. How to install Optical cable

Assembly sequence

1. Insert the optical cable into the CABLE GLAND
2. Assemble as shown.
3. Tighten the CABLE GLAND NUT (Torque = 5.5N·m)

3.1.8 Mounting of HRDU_4000

HROU_4000 has slots to enable up to four HRDU modules to be mounted in.

You can mount an HRDU into the designated slot surely. It is not possible to provide services with an HRDU module alone; you need to connect the HRDU cavity duplexer antenna port with CU's designated port.

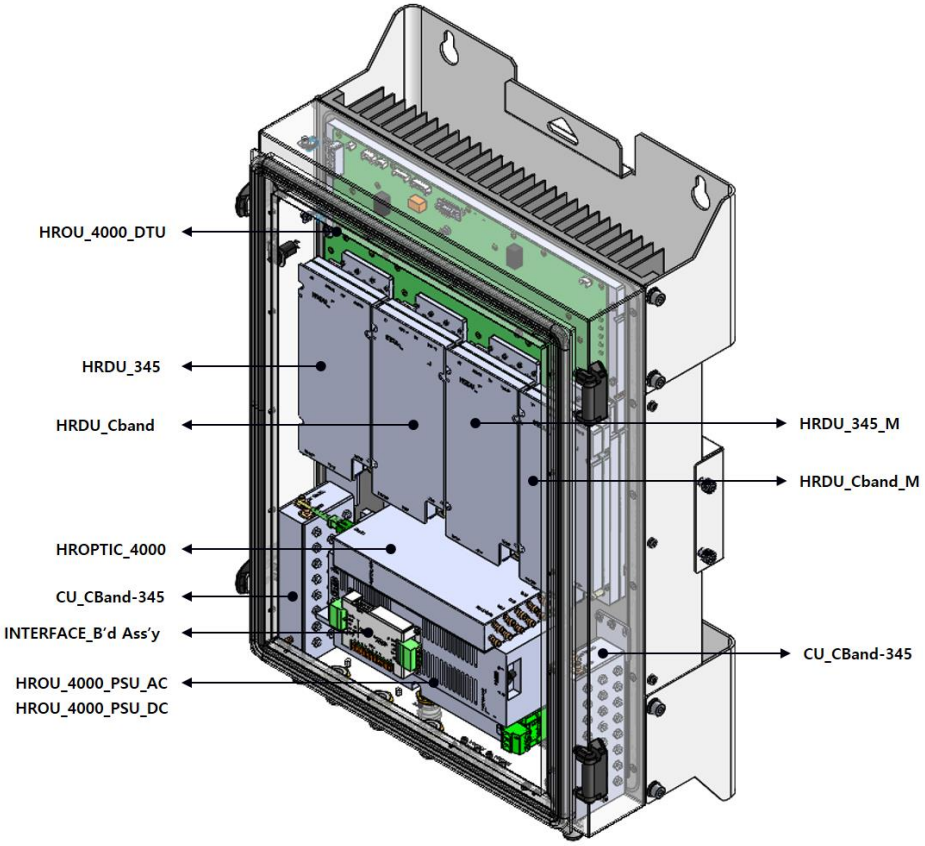

Figure 20. Location of each module in the HROU_4000

The remote unit holds a maximum of 4 HRDUs. Guide brackets on the bottom of each HRDU slot simplify installation as described below. MRDU installation requires a #1 tip-sized crosshead screwdriver.

The procedures are:

1. Place the HRDU to be horizontal to the guide pin of the enclosure.
2. Slide the HRDU to fit the corresponding interface location of the DTU and HROPTIC connector.

3. Secure 4 screws with a #1 tip-sized crosshead screwdriver to fasten the HRDU.

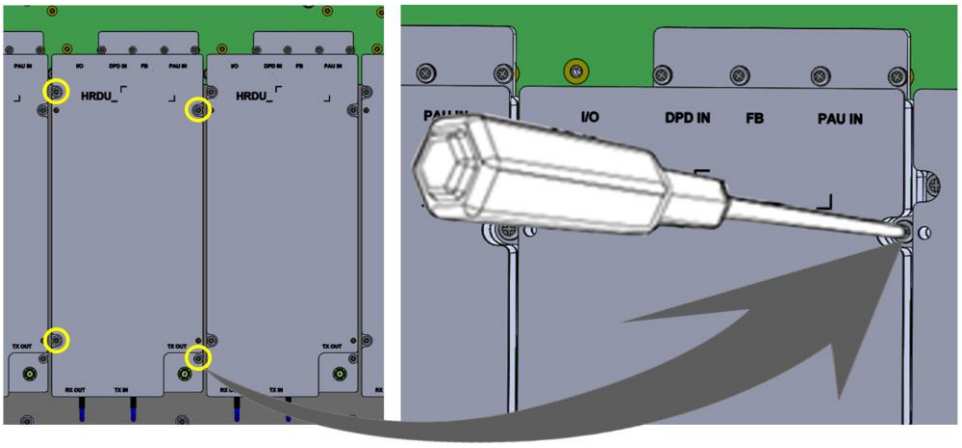

Figure 21.How to mount HRDU

3.1.9 Replacing a FAN Unit

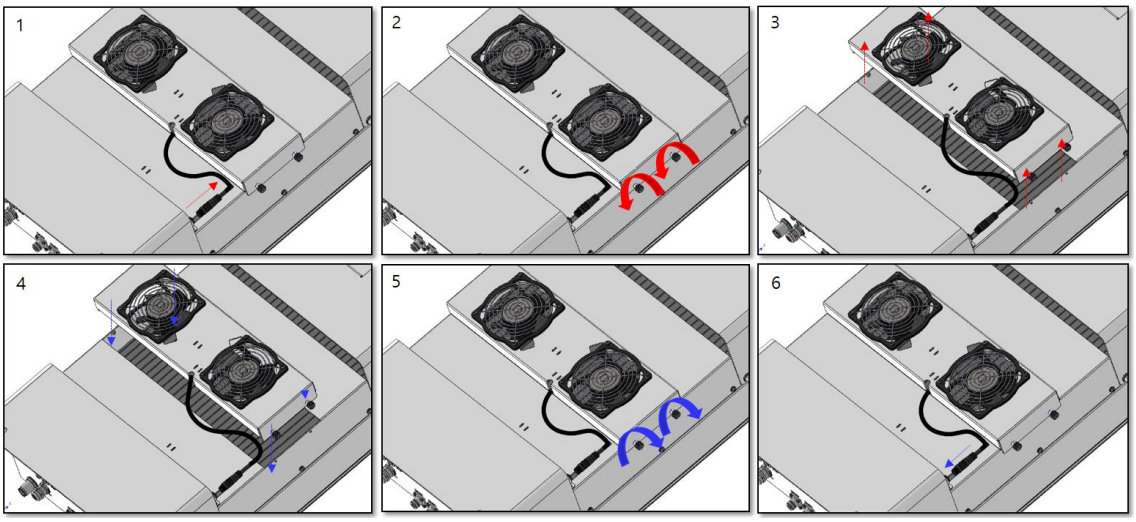

Figure 22. How to change fan units

The assembly procedure is as follows:

1. Disconnect the cable connector (If the fan unit is dismantled without disconnecting the cable, care must be taken as this may apply a great deal of force to the cable.)
2. Remove the four captive screws of the fan unit.
3. Remove the fan unit from the hull.
4. Attach a new fan unit to its location.
5. Tighten the four captive screws of the fan unit.
6. Connect the cable connector.