ALLIANCE_N20

User Manual

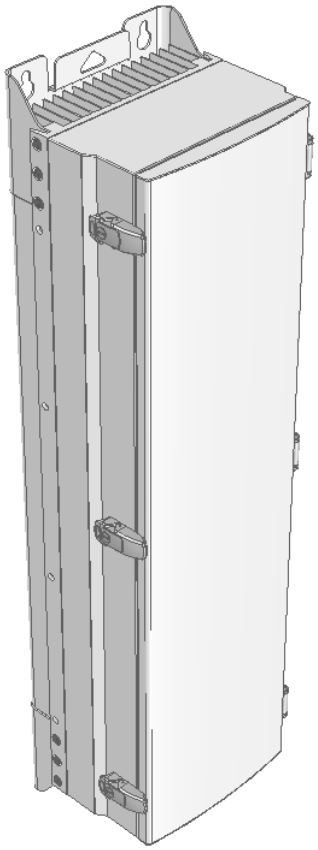

Document Reference:

Version:	V1.2
Document Status:	Release 2
Issue Date:	Jan 16, 2017
Author:	Hwan sun Lee
Department:	R&D Division Team 3
Authorizing Manager:	Kyung Eun Han

REVISION HISTORY

Version	Issue Date	No. of Pages	Initials	Details of Revision Changes
V 1.0	Aug. 20, 2014		Original	
V 1.1	Aug. 2015		Revision	Add 2.5TDD Information
V1.2	Jan 16, 2017		Update	Updated RDU CPU Firmware
V1.3	Dec 7, 2017		Update	Added new products

Technical Support

SOLiD serial numbers must be available to authorize technical support and/or to establish a return authorization for defective units. The serial numbers are located on the back of the unit, as well as on the box in which they were delivered. Additional support information may be obtained by accessing the SOLiD Tehcnology, Inc. website at www.solid.co.kr or send email at sjkim@solid.co.kr

This manual is produced by Global Business Division Business Team Printed in Korea.

Contents

Section1 Safety & Certification Notice 6

Section2 System configuration and Functions 10

2.1 HROU (High power Remote Optic Unit) 11

2.1.1 Specifications of HROU 12

2.1.2 Block Diagram of HROU 15

2.1.2.1 HMRU block diagram 15

2.1.2.2 HROU inner look 16

2.1.2.3 HROU part list 17

2.1.3 Function by unit 18

2.1.3.1 High Remote Drive Unit (HRDU) 18

2.1.3.2 Remote Power Supply Unit (RPSU) 21

2.1.3.3 Remote Optic(ROPTIC) 22

2.1.3.4 Remote Central Processor Unit (RCPU) 22

2.1.3.5 Multiplexer 23

2.1.3.6 System interface unit (SIU) 23

2.1.4 Bottom of HROU 24

2.1.4.1 Functions 24

Section3 System Installation 28

3.1 HROU Installation 28

3.1.1 Tools 28

3.1.2 HROU Enclosure installation 29

3.1.3 HROU Wall Mount Installation 30

3.1.4 HROU components 31

3.1.5 HROU Power Cabling 33

3.1.6 HROU Ground cabling 34

3.1.7 HROU Optical Cable 36

3.1.8 HROU ALM IN/OUT Port cabling 38

3.1.9 Mounting of HRDU 40

Contents of Figure

Figure 3. HROU consists of 2 unit 11

Figure 4. HROU outer Look 12

Figure 5. HMRU Block diagram 15

Figure 6. Inside of Remote Unit 16

Figure 7. HRDU Outer Look 18

Figure 8. AC-DC RPSU Outer Look 21

Figure 9. DC-DC RPSU Outer Look 21

Figure 10. R OPTIC Outer Look 22

Figure 11. AC-DC RPSU Outer Look 23

Figure 12. Multiplexer Outer Look 23

Figure 13. SIU Outer Look 24

Figure 14. The Bottom Look of HROU and CU options 25

Figure 15. The panel for support CU Option3 with 4 antenna ports 25

Figure 16. The name of each port on the bottom of HROU 25

Figure 17. How to install ROU 29

Figure 18. Dimension used to install HROU on the WALL 30

Figure 19. Procedures of installation 31

Figure 20. Location of Ground Terminal 34

Figure 21. Information of Terminal 35

Figure 22. How to install Ground Terminal 35

Figure 23. Location of Optical Connector 36

Figure 24. Information of Optical Connector 37

Figure 25. How to install Optical Cabling 38

Figure 26. Location of ALM IN/OUT Connector 38

Figure 27. Information of ALM IN/OUT Connector 39

Figure 28. How to install ALM IN/OUT Cabling 39

Figure 29. Location of each modules in the HROU 40

Figure 30.How to mount HRDU 41

Section1

Safety & Certification Notice

"Only qualified personnel should handle the DAS equipment. Any person involved in installation or service of the DAS should understand and follow these safety guidelines."

- Obey all general and regional installation and safety regulations relating to work on high voltage installations, as well as regulations covering correct use of tools and personal protective equipment.

- The power supply unit in repeaters contains dangerous voltage level, which can cause electric shock. Switch the mains off prior to any work in such a repeater. Any local regulations are to be followed when servicing repeaters.

- When working with units outdoors, make sure to securely fasten the door or cover in an open position to prevent the door from slamming shut in windy conditions.

- Use this unit only for the purpose specified by the manufacturer. Do not carry out any modifications or fit any spare parts which are not sold or recommended by the manufacturer. This could cause fires, electric shock or other injuries.

- Any DAS system or Fiber BDA will generate radio (RF) signals and continuously emit RF energy. Avoid prolonged exposure to the antennas. SOLiD recommends maintaining a 500 cm minimum clearance from the antenna while the system is operating.

- Antennas must be installed in accordance with FCC 27.50 and Part 24, SRSP 502, SRSP 503, SRSP 510 and SRSP 513. With 17dBi gain antennas the height of the antenna above average terrain (HAAT) must not exceed 834.43 m. For different gain antennas refer to the relevant rules and the local licensing auth orities.

- Do not operate this unit on or close to flammable materials, as the unit may reach high temperatures due to power dissipation.

- Do not use any solvents, chemicals, or cleaning solutions containing alcohol, ammonia, or abrasives on the DAS equipment. Alcohol may be used to clean fiber optic cabling ends and connectors.

- To prevent electrical shock, switch the main power supply off prior to working with the DAS System or Fiber BDA. Never install or use electrical equipment in a wet location or during a lightning storm.

- Do not look into the ends of any optical fiber or directly into the optical transceiver of any digital unit. Use an optical spectrum analyzer to verify active fibers. Place a protective cap over any radiating transceiver or optical fiber connector to avoid the potential of radiation exposure.

- Allow sufficient fiber length to permit routing without severe bends.

- For pluggable equipment, make sure to install the socket outlet near the equipment so that it is easily accessible.

- A readily accessible disconnect device shall be incorporated external to the equipment.

- This power of this system shall be supplied through wiring installed in a normal building.

If powered directly from the mains distribution system, it shall be used additional protection, such as overvoltage protection device

- Only 50 ohm rated antennas, cables and passive equipment shall be used with this remote. Any equipment attached to this device not meeting this standard may cause degradation and unwanted signals in the bi-directional system. All components connected to this device must operate in the frequency range of this device.

- Only 50 ohm rated antennas, cables and passive components operating from 150 - 3 GHz shall be used with this device.

- The head end unit must always be connected to the Base Station using a direct cabled connection. This system has not been approved for use with a wireless connection via server antenna to the base station.

- Access can only be gained by SERVICE PERSONS or by USERS who have been instructed about the reasons for the restrictions applied to the location and about any precautions that shall be taken; and
- Access is through the use of a TOOL or lock and key, or other means of security, and is on trolled by the authority responsible for the location.
- Notice! Be careful not to touch the Heat-sink part due to high temperature.

- Signal booster warning label message should include

WARNING. This is **NOT** a **CONSUMER** device. It is designed for installation by **FCC LICENSEES** and **QUALIFIED INSTALLERS**. You **MUST** have an **FCC LICENSE** or express consent of an FCC Licensee to operate this device. Unauthorized use may result in significant forfeiture penalties, including penalties in excess of $100,000 for each continuing violation.

- Certification

- FCC: This equipment complies with the applicable sections of Title 47 CFR Parts 15,22,24,27 and 90(Class B)
  - Use of unauthorized antennas, cables, and/or coupling devices not conforming with ERP/EIRP and/or indoor-only restrictions is prohibited.
  - Home/ personal use are prohibited.
- UL/CUL: This equipment complies with UL and CUL 1950-1 Standard for safety for information technology equipment,including electrical business equipment

- FDA/CDRH: This equipment uses a Class 1 LASER according to FDA/CDRH Rules.This product conforms to all applicable standards of 21 CFR Chapter 1, Subchaper J, Part 1040

- IC Booster warning label message should include

WARNING: This is NOT a CONSUMER device. It is designed for installation by an installer approved by an ISED licensee. You MUST have an ISED LICENCE or the express consent of an ISED licensee to operate this device.

Section2

System configuration and Functions

2.1 HROU (High power Remote Optic Unit)

HROU consists of two unit, one is HMRU(High power Main Remote Unit) and the other is HARU(High power Add-on Remote Unit).

The biggest difference between HMRU and HARU is whether R-OPTIC module exist or not in the enclosure.

HMRU receives TX optical signals from ODU and converts them into RF signals. The converted RF signals are amplified through High Power Amp in a corresponding HRDU band combined with UDCU, PAU and Cavity duplexer, and then radiated to the antenna port.

When receiving RX signals through the antenna port, this unit filters out-of-band signals in a corresponding HRDU and sends the results to R-OPTIC to make electronic-optical conversion of them. After converted, the signals are sent to a upper device of ODU. HMRU can be equipped with up to four HRDUs (High Remote Drive Unit) and the module supports single band only.

HARU receives TX RF signal from HMRU and amplifies through High Power Amp in a corresponding HRDU combined with UDCU, PAU and Cavity duplexer, and then radiated to the CU(Combining Unit)

When receiving RX signals through the antenna port, HRDU filters out-of band signal in a corresponding HRDU and sends the results to MHRU through RF cable.

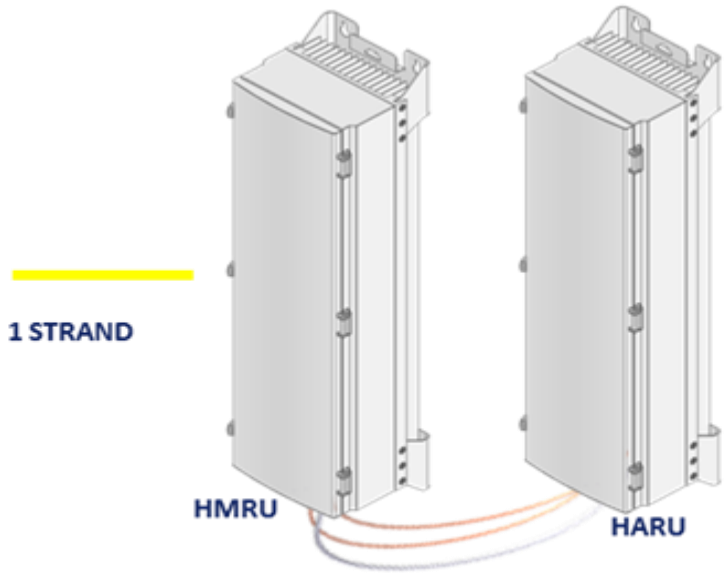

Figure 1. HROU consists of 2 unit

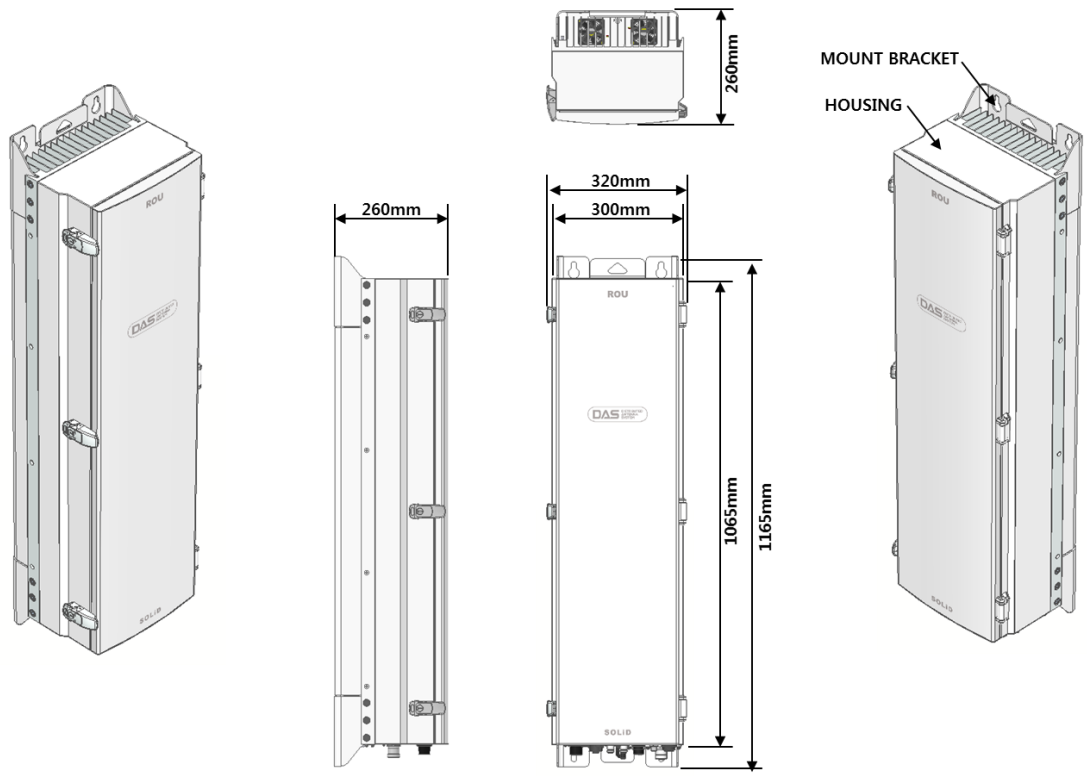

Figure 2. HROU outer Look

2.1.1 Specifications of HROU

Item	Spec.		Remark
	HMRU		
The rated mean output Power per band	700LTE 850IC 1900P AWS13 2600_FDD	+44dBm	
	R-700LTE-FN R-850IC R-1900P R-AWS13 2300_WCS 2500TDLTE	+43dBm	
	1900P_40	+46dBm	
	AWS13_40	+46dBm	

The nominal downlink bandwidth	700LTE	28MHz		728 - 756MHz
	R-700LTE-FN	40MHz		728 - 768MHz
	850IC	32MHz		862 - 894MHz
	R-850IC			
	1900P	65MHz		1930 - 1995MHz
	R-1900P			
	AWS13	70MHz		2110 - 2180MHz
	R-AWS13			
	1900P_40	65MHz		1930 - 1995MHz
	AWS13_40	70MHz		2110 - 2180MHz
	2300_WCS	10MHz		2350 – 2360MHz
	2500TDLTE	67.6MHz (LB, UB) 37.8MHz (MB)		LB : 2497.8 ~ 2565.4 MHz MB : 2574.1 ~ 2611.9 MHz UB : 2619.8 ~ 2687.4 MHz
	2600_FDD	70MHz		2620 - 2690MHz
The nominal uplink bandwidth	700LTE	17MHz and 10MHz		699 - 716MHz 777 - 787MHz
	R-700LTE-FN	17MHz and 20MHz		699 - 716MHz 777 - 798MHz
	850IC	32MHz		817 - 849MHz
	R-850IC			
	1900P	65MHz		1850 - 1915MHz
	R-1900P			
	AWS13	70MHz		1710 - 1780MHz
	R-AWS13			
	1900P_40	65MHz		1850 - 1915MHz
	AWS13_40	70MHz		1710 - 1780MHz
	2300_WCS	10MHz		2305 – 2315MHz
	2500TDLTE	67.6MHz (LB, UB) 37.8MHz (MB)		LB : 2497.8 ~ 2565.4 MHz MB : 2574.1 ~ 2611.9 MHz UB : 2619.8 ~ 2687.4 MHz
	2600_FDD	70MHz		2500 - 2570 MHz
The nominal passband gain	Downlink	R-700LTE-FN	63dB	
		700LTE 850IC	59dB	

		1900P AWS13 2600_FDD	59dB	
		2300_WCS 2500TDLTE		
		R-850IC	65dB	
		R-1900P R-AWS13	63dB	
		1900P_40W AWS13_40W	62dB	
	Uplink	45dB		each band
Input/ Output Impedance	50 ohm			
Weight	39 Kg			Common Part
Power consumption	50W			
Temperature range	-25°C to +55°C/ -13 to 131°F			Ambient Temperature
Humidity Range	0% ~ 90%			Non-condensing
Sealing (Remote Unit)	IEC 60 529 EN 60 529			IP66 Complaint
Size(mm)	320 x 1165 x260			Including Bracket

2.1.2 Block Diagram of HROU

2.1.2.1 HMRU block diagram

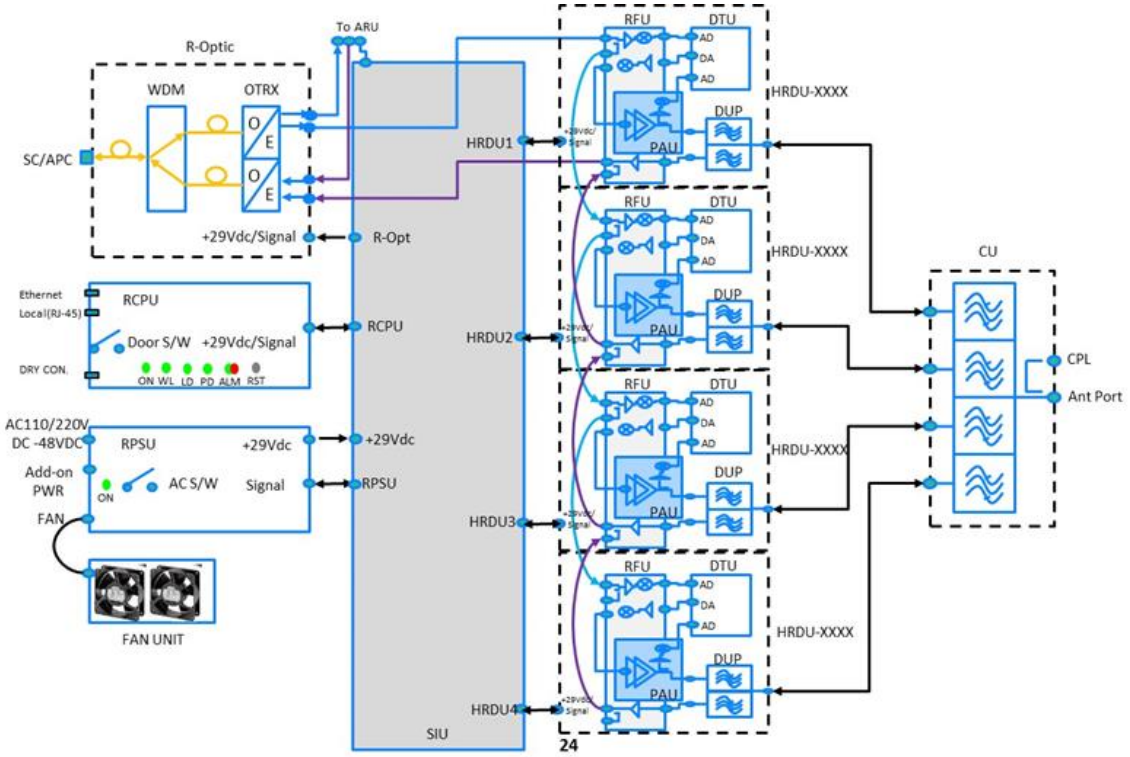

Figure 3. HMRU Block diagram

2.1.2.2 ROU inner look

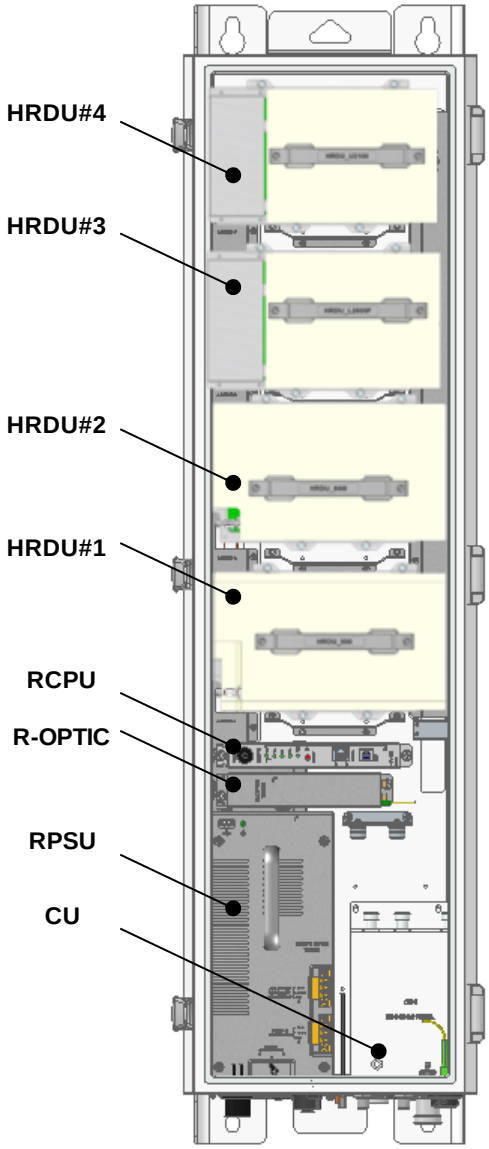

Figure 4. Inside of Remote Unit

** In the HARU enclosure, not need to install R-Optic

2.1.2.3 HROU part list

No.	Unit	Description	Remark
1	HRDU X4	**High Remote Drive Unit** Consist of UDCU, PAU and cavity filter Filter and high amplify TX signals; Filter and amplify RX signals in low noise amplifier; Remove out-of signals through cavity duplexer	Optional Max 4
2	RPSU(AC)	**Remote Power Supply Unit** Input power: 110 VAC/220VAC (85~264V) Output power: +29 VDC	
	RPSU(DC)	**Remote Power Supply Unit** Input power: -48 VDC(-40.8 ~ -57.6V) Output power: +29 VDC	
3	R-OPTIC	**Remote Optic** Make RF conversion of TX optical signals; Convert RX RF signals into optical signals; Compensates optical loss; 5dBo optical link between ODU(OM4) and ROU; 10dBo optical link between ODU(OM1) and ROU; Fiber Connector: SC/APC Connector; Optical Wavelength: 1310/1550 WDM; Communicates with BIU/OEU though the FSK modem	
4	RCPU	**Remote Central Processor Unit** Controls signal of each unit Monitors BIU/ODU/OEU status through FSK modem communication	
5	CU1-L7085IC19P21A	**Multiplexer1** This integrated combiner unit combines all bands for output to a single antenna connection.	
	CU2-L7085IC19P21A	**Multiplexer2** This integrated combiner unit combines all low bands (<1 GHz) to one antenna connection and all high bands (>1 GHz) to a second antenna connection.	

	No combiner	If no combiner is used, all amplifier outputs should be connected directly to the individual antenna connectors on the bottom of the enclosure	
6	Enclosure	Enclosure to satisfy NEMA4(IP66); Wall mounting(Vertical Mount)	
7	SIU	**System Interface Unit** Distribute power and signals of each module	

2.1.3 Function by unit

2.1.3.1 High Remote Drive Unit (HRDU)

When receiving TX signals from each band through Remote Optic, HRDU filters the signals and amplifies them with High Power Ampifier. The unit also filters RX signals given through cavity filter and amplifies them to send the signals to Remote Optic.In the unit, there is ATT to adjust gain. HRDU consist of UDCU, DTU, PAU and cavity duplexer like below figure and all modules are merged with one package.

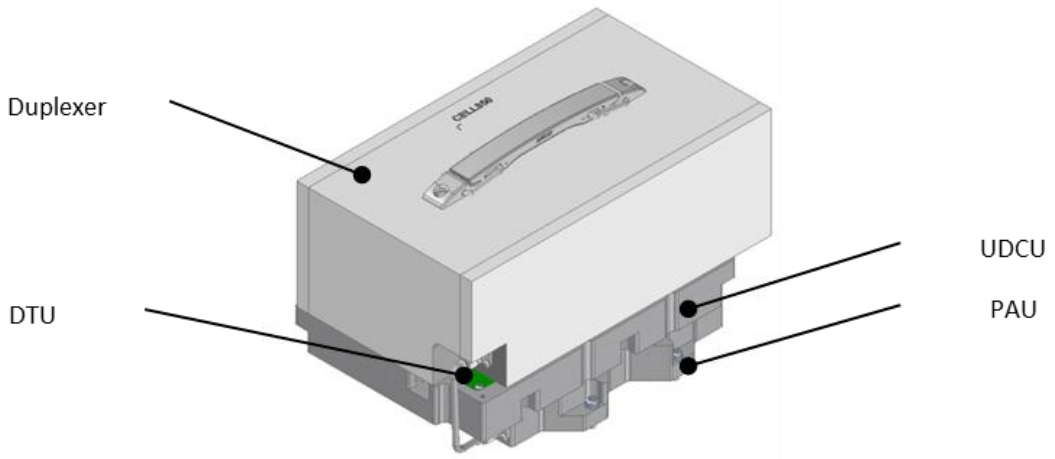

Figure 5. HRDU Outer Look

HRDU devices are varied for each frequency band , including the following:

No	Unit Naming	Description	Frequency (Bandwidth)	
			TX	RX
1	N20-HRDU-L700	Single band	728~756MHz	699 ~ 716MHz 777 ~ 787MHz
2	N20-R-HRDU-700LTE-FN	Single band	728~768MHz	699 ~ 716MHz 777 ~ 798MHz
3	N20-HRDU-850IC	Single band	862 - 894MHz	817 - 849MHz
4	N20-R-HRDU-850IC	Single band	862 - 894MHz	817 - 849MHz
5	N20-HRDU-1900P	Single band	1930 - 1995MHz	1850 - 1915MHz
6	N20-R-HRDU-1900P	Single band	1930 - 1995MHz	1850 - 1915MHz
7	N20-HRDU-AWS13	Single band	2110 - 2180MHz	1710 - 1780MHz
8	N20-R-HRDU-AWS13	Single band	2110 - 2180MHz	1710 - 1780MHz
9	N20-HRDU_1900P_40	Single band	1930 - 1995MHz	1850 - 1915MHz
10	N20-HRDU_AWS13_40	Single band	2110 - 2180MHz	1710 - 1780MHz
11	N20-HRDU_2300_WCS	Single band	2350-2360MHz	2305~2315MHz
12	N20-HRDU-2500TDLTE	Single band	LB : 2497.8 ~ 2565.4 MHz MB : 2574.1 ~ 2611.9 MHz UB : 2619.8 ~ 2687.4 MHz	
13	N20-HRDU_2600_FDD	Single band	2620-2690MHz	2500-2570MHz

No	Unit naming	Dimension	Weight	Power consumption	Outlook
1	N20-HRDU-L700 N20-R-HRDU-700LTE	233 X 155 X 148	6.2kg	140W	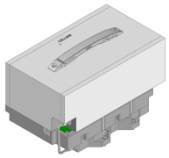
2	N20-HRDU-850IC N20-R-HRDU-850IC	233 X 155 X 143	5.6kg	150W	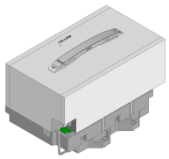
3	N20-HRDU-1900P N20-R-HRDU-1900P	233 X 155 X 131	4.5kg	150W	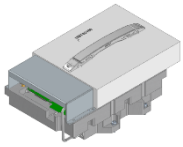
4	N20-HRDU-AWS13 N20-R-HRDU-AWS13	233 X 155 X 98	3.4kg	130W	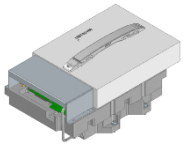
5	N20-HRDU-2300_WCS	233 X 155 X 89	3.4kg	145W	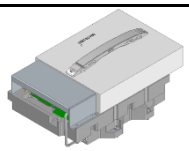
6	N20-HRDU-25TDD	233 X 155 X 89	4.3kg	175W	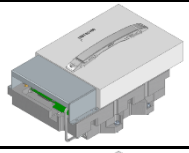
7	N20-HRDU-2600_FDD	233x155x129	5.3 kg	155W	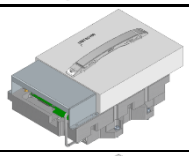
8	N20-HRDU_1900P_40	233x155x129	5.3 kg	155W	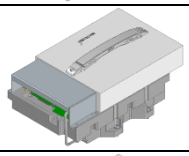
9	N20-HRDU_AWS13_40	233x155x129	5.3 kg	155W	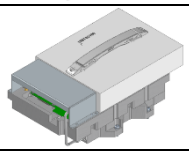

2.1.3.2 Remote Power Supply Unit (RPSU)

There are 2types of RPSU in the HROU for supply to active module in the enclosure and receive power from external.

They are the DC/DC PSU receiving input -48V and the AC/DC PSU receiving input 110V/220V from external.

As order, either of the two types should be decided. MS Connector, which uses ports to receive inputs, is designed to accept any of AC and DC. Only in this case, the input cable is different.

RPSU has a circuit brake to turn the power ON/OFF and has LED indicator at the top to check if input power is normally supplied.

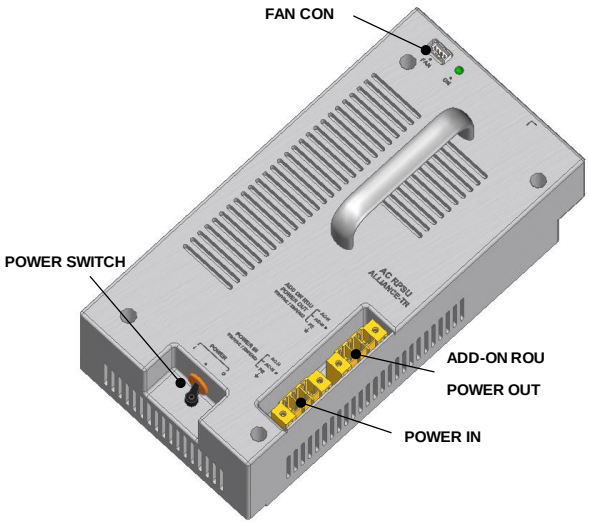

Figure 6. AC-DC RPSU Outer Look

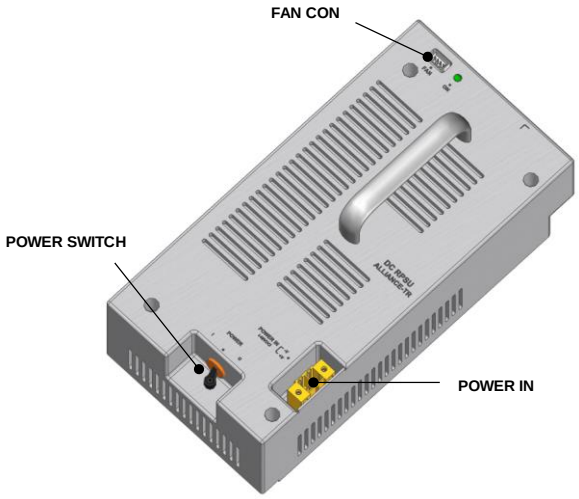

Figure 7. DC-DC RPSU Outer Look

Functions:

- Providing a circuit breaker to turn AC power ON/OFF
- Providing DC power each HRDU
- Providing DC power and signal to FAN tray
- LED indicators for showing alarm staus of PSU

Caution

DOUBLE POLE/NEUTRAL FUSING

2.1.3.3 Remote Optic(ROPTIC)

Remote Optic converts optical signals into RF signals and performs vice versa. It also has internal ATT for optical compensation to compensate for optical cable loss. It provides two path in pairs(TX/RX) to transport RF signal to ARUs.

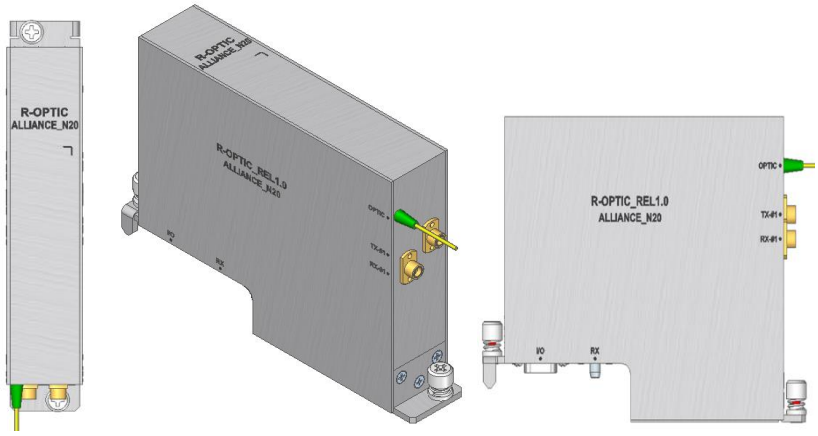

Figure 8. R OPTIC Outer Look

2.1.3.4 Remote Central Processor Unit (RCPU)

RCPU can monitor and control each module of HROU. This unit receives and analyzes upper communication data from Remote Optic and reports the unit's own value to upper devices. At the front of the module, it has LED indicator to show system status, letting you check any abnormalities at a time. At the same front, it also has communication LED Indicators to show communication status with upper

devices. Through Local port, the unit enables you to check and control device status through PC and laptop. It provides three interface port with ARUs to communicate with these. It also provide dry contact port, which is (1) output port and (1) input port.

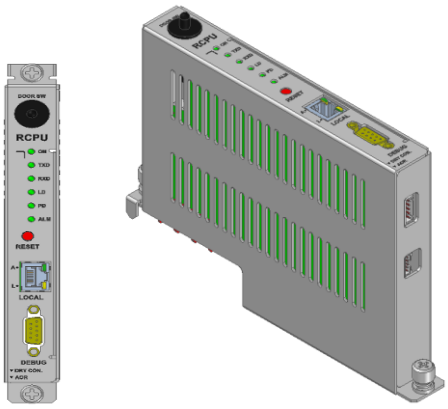

Figure 9. AC-DC RPSU Outer Look

2.1.3.5 Multiplexer

Multiplexer it called combine unit(CU) works as a module to combine or distribute multiple signals into one or two antennas.

This device has a port to combine multiple signals. You need to connect input and output ports of RDU through a corresponding port.

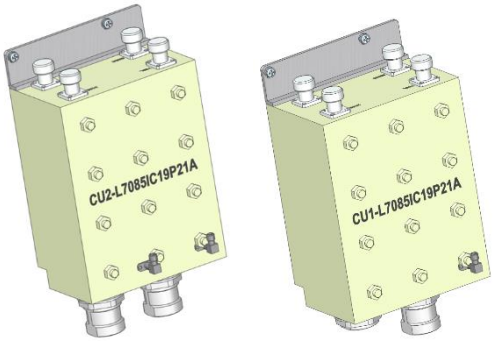

Figure 10. Multiplexer Outer Look

2.1.3.6 System interface unit (SIU)

This unit connect with HRDU, R CPU, R Optic and RPSU. SIU distributes power and signals to each module. Each unit need to connected to the correct slot of the SIU.

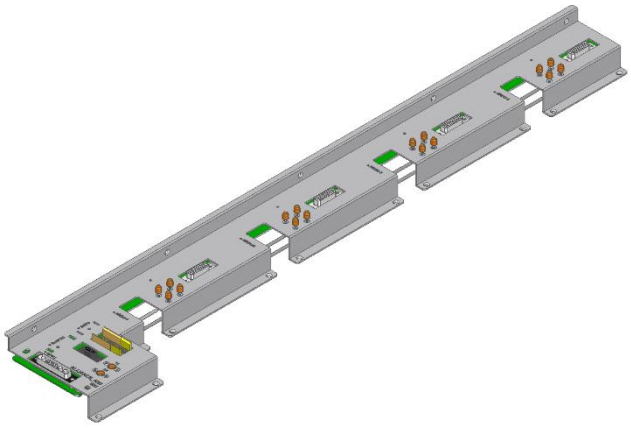

Figure 11. SIU Outer Look

2.1.4 Bottom of HROU

2.1.4.1 Functions

The Bottom look of HROU depends on the combine unit(CU) with 3 options.

The CU option1 and 2 need to install a specified CU in the enclosure like the table below explains.

Thus, the CU option1 has one antenna port, the CU option2 has two antenna ports.

Finally, the CU option3 with 4 antenna ports is not necessary to install CU in the enclosure and needs to apply the panel with 4-DIN Type on the bottom of HROU.

See table and drawing below for.

Option1	: The HMRU shall provide an integrated combiner that combines all bands for output to a single antenna connection.
Option2	:The HMRU shall provide an integrated combiner that combines all low bands (<1 GHz) to a single antenna connection. All high bands (>1 GHz) will be combined to a single antenna connection.
Option3	: The HMRU shall provide NO combiner. All amplifier outputs will connect directly to antenna connectors on the bottom of the enclosure

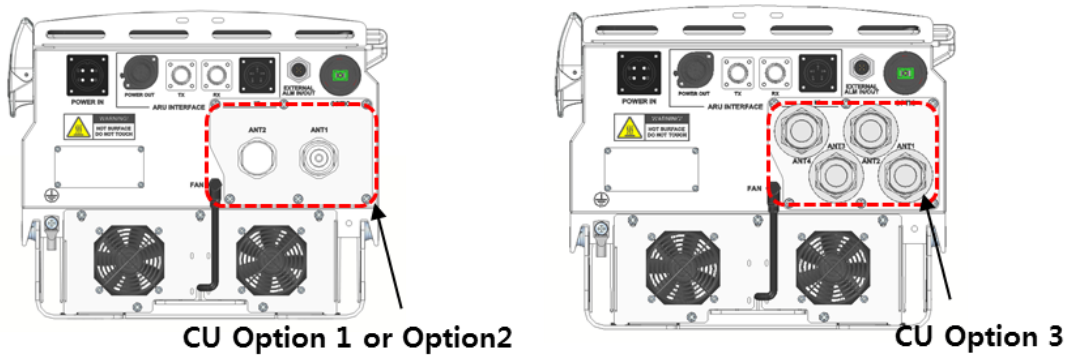

Figure 12. The Bottom Look of HROU and CU options

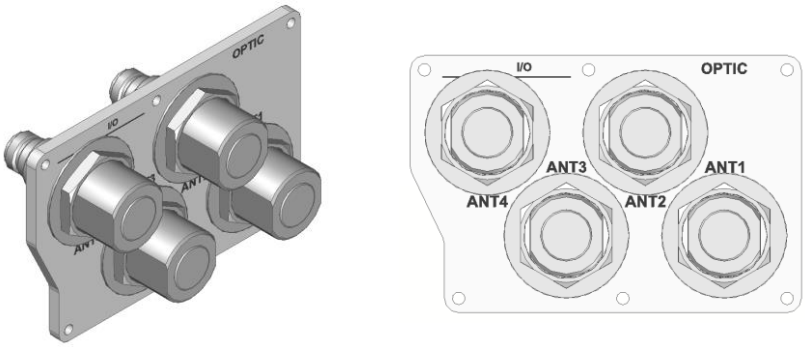

Figure 13. The panel for support CU Option3 with 4 antenna ports

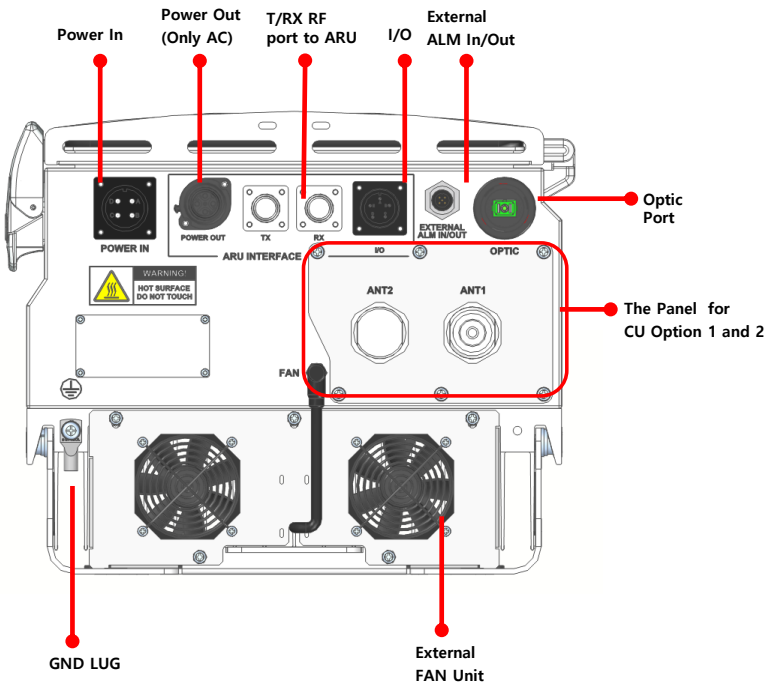

Figure 14. The name of each port on the bottom of HROU

No	Port	HMRU	Remark
1	Optical Port	1EA	SC/APC, Waterproof Optiacl Input port
2	T/RX RF Port	2EA	N Type-Female Connected for transmittering TX to ARU and recieving RX signal from ARU.
3	ANT1	1EA	DIN-type female_CU option1 ,2 and 3
4	ANT2	1EA	DIN-type female_CU option2 and 3
5	ANT3	1EA	DIN-type female_Only CU Option3
6	ANT4	1EA	DIN-type female_Only CU Option3
7	Power IN	1EA	MS-Con, Waterproof AC Power IN Or DC Power IN
8	Power OUT	1EA	MS-Con, Waterproof AC 120V Output port(Only AC) to ARU
9	External FAN unit	1EA	Waterproof-Con
10	GND LUG PORT	1EA	Terminal for system ground
11	External ALM In/Out	1EA	Input/output terminal for dry contact
12	I/O Port	1EA	Port for communicate with ARU

POWER PORT

Power ports are used for power-supplying of -48V DC or 120V AC, and specific power cable should be applied to each different types of ROU power supply (AC/DC or DC/DC). Below figure is naming of the power supply by type.

AC Power

Port outlook	MS Connector numbering	Name	Description
	A	AC_H	AC Hot
	B	AC_N	AC Neutral
	C	N.C	Not Connected

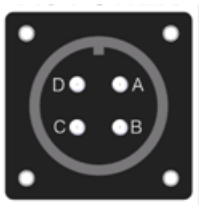	D	F.G	Frame Ground

DC Power

Port outlook	MS Connector numbering	Name	Description
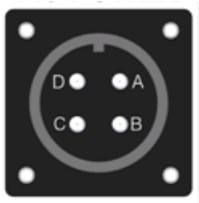	A	N.C	Not Connected
	B	N.C	Not Connected
	C	+V	+48V
	D	-V	-48V

I/O PORT

I/O ports are reserved ports for ARU for future implementation, and used to monitor the status and control the equipments. Below figure is naming of the I/O ports.

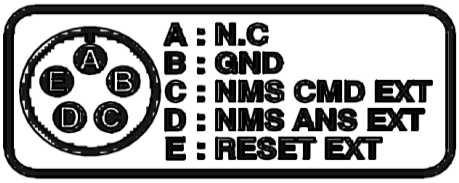

Section3

System Installation

3.1 HROU Installation

This chapter describes how to install each unit and optical cables, along with power cabling method.
In detail, the chapter describes how to install shelves or enclosuers of each unit, Power Cabling method and Optic Cabling and RF Interface. Furthermore, by showing power consumption of modules to be installed in each unit, it presents Power Cabling budget in a simple way. Then, it describes the quantity of components of modules to be installed in each unit and expansion method.

3.1.1 Tools

Tools needed for installation is table below

No	Tools	Q'ty	Specification	Remark
1		1	+, 3Ø Length is more than 20mm	For fixing HRDU
2		1	33mm	To tighten antenna port
3		1	19mm	To CU N-type port

3.1.2 HROU Enclosure installation

HROU is designed to be water- and dirt-proof. The unit has the structure of one-Body enclosure. It satisfies water-proof and quake-proof standards equivalent of NEMA4(IP65). The way to install for both HMRU and ARU has same method. Basically HROU is attached with wall mountable bracket. HROU can be mounted into either of wall or on a pole.

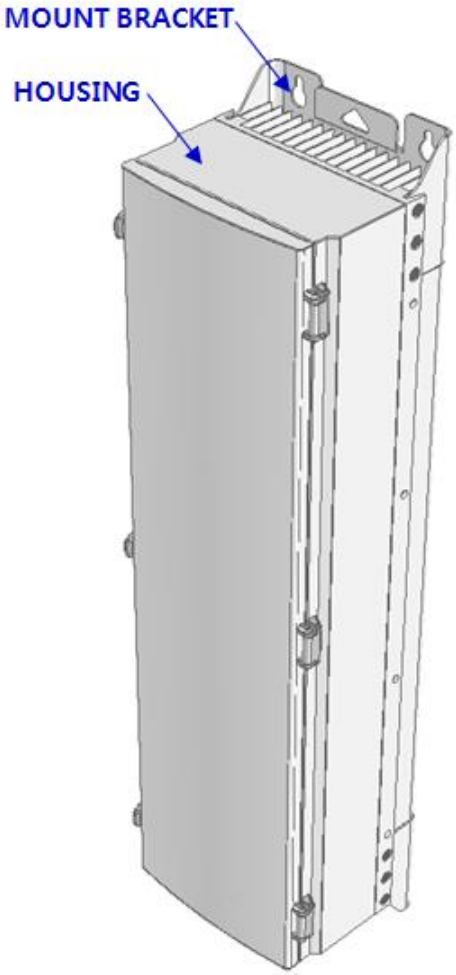

Figure 15. How to install ROU

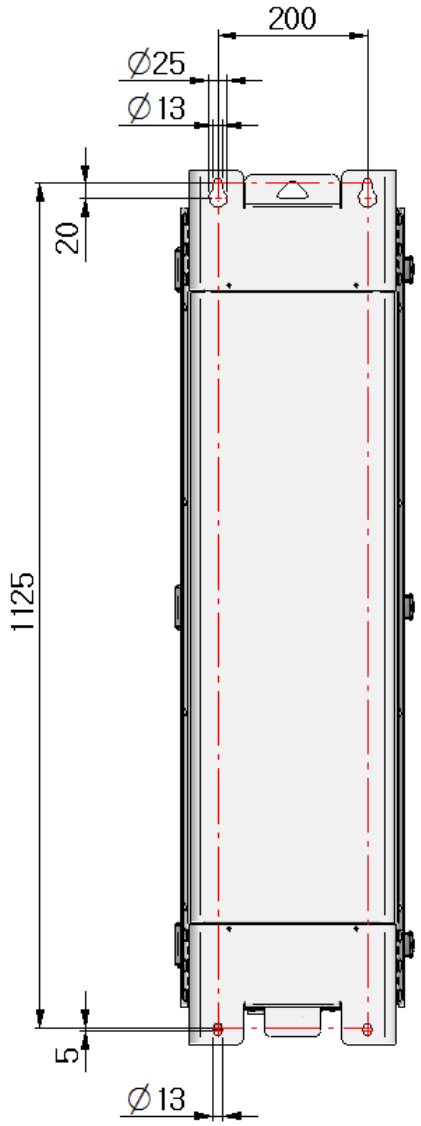

Figure 16. Dimension used to install HROU on the WALL

3.1.3 HROU Wall Mount Installation

HROU's installation bracket is attached on Enclosure when is delivered. It doesn't need to remove bracket to install enclosure. simply after installing 4 of M12 mounting bolts, secure 4 mounting bolts tightly.

First, install 2 of M12 mounting bolts roughly half way on the enclosure and install enclosure over the bolts and secure tightly.

Second, install 2 of M12 mounting bolts under the enclosure and secure tightly.

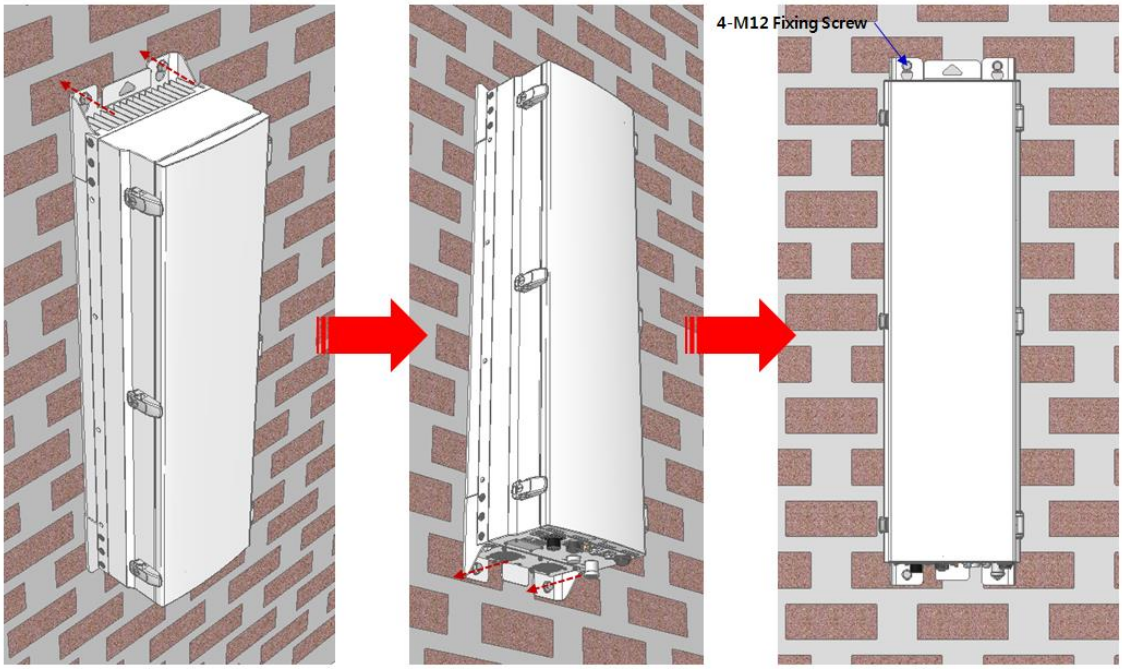

Figure 17. Procedures of installation

3.1.4 HROU components

HROU has the following components:

No.	Unit	Description	Remark
Common Part	Enclosure	Including Wall mounting bracket	1EA
	RCPU	-	1EA
	R_OPTIC	With SC/ACP adaptor(only HMRU)	1EA,optional
	RPSU	AC 110/220V or DC -48V	1EA
	FAN UNIT	2 FANs is inside	1EA
	CU1-L7085IC19P21A	**Multiplexer1** This integrated combiner unit combines all bands for output to a single antenna connection.	1EA, optional
	CU2-L7085IC19P21A	**Multiplexer2** This integrated combiner unit combines all low bands (<1 GHz) to one antenna connection and all high bands (>1 GHz) to a second antenna connection.	1EA, optional

	CU4-L7085IC19P21A25TDL	**Multiplexer3** The integrated CU that combines all band for output to a single antenna output. Either 700LTE or 850IC band is combined to the single antenna output through the designated port for dual input prepared at upper right corner.	1EA, optional
	CU7-23W25TDL	**Multiplexer4** This integrated CU combines two bands for output to a single antenna connection.	1EA, optional
	No combiner	If no combiner is used, all amplifier outputs should be connected directly to the individual antenna connectors on the bottom of the enclosure	1EA
	Power Cable1	MS Connector with 4 hole(AC and DC)	1EA, HMRU
	Power Cable2	MS connector for HMRU connection with MS con and Circular connector on the each side of end	1EA, HARU
HMRU	HRDU	Max 4RDUs in the one enclosure	Max 4EA

Basically, the common part of HROU should have an enclosure and it is equipped with RCPU to inquire and control state of each module, R_OPTIC to make both of electronic-optical and optical-electronic conversions, RPSU to supply power for HROU. It should have Power Cable for external rectifier or to supply required power.

In addition, HRDU can be mounted and removed to provide service for desired band.

3.1.5 HROU Power Cabling

AC Power

HROU supports AC110V/220V of input power. Provided outside power cable is only one type with AWG#14 3m. Power cable is provided without power plug and it should be attached power plug based on national's power plug type.

The pin discription of AC port is below. You should connect exact polarity of AC.

Port outlook	MS Connector numbering	Name	Description
AC POWER 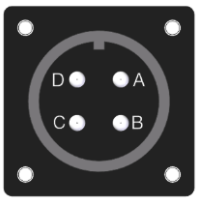 **A : AC_H** **B : AC_N** **C : N.C** **D : F.G ⏚**	A	AC_H	AC Hot
	B	AC_N	AC Neutral
	C	N.C	Not Connected
	D	F.G	Frame Ground

Check if the connection is the same as one seen in the table above and make sure to turn the power ON.

Provided AC power cable's outlook is below

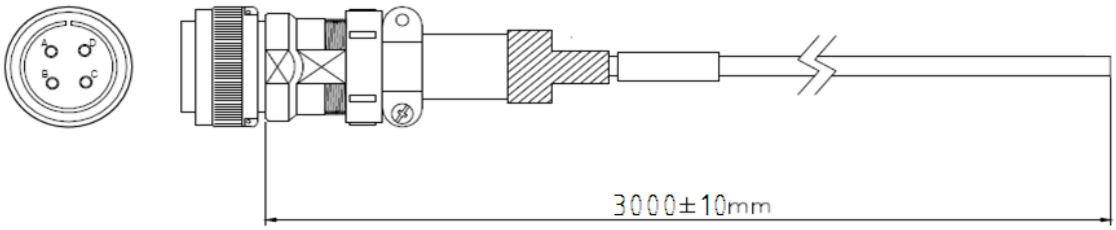

DC Power

HROU supports only DC48V of input power. Provided outside power cable is only one type. The pin discription of DC port is below. You should connect exact polarity of DC.

Port outlook	MS Connector numbering	Name	Description
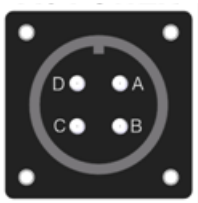	A	N.C	Not Connected
	B	N.C	Not Connected
	C	+V	+48V
	D	-V	-48V

Check if the connection is the same as one seen in the table above and make sure to turn the power ON.

Provided DC power cable's outlook is below

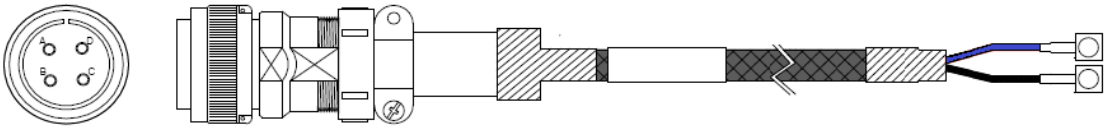

3.1.6 HROU Ground cabling

The Grounding terminal is located at the bottom of HROU enclosure fixed by M6 screw. Compression terminal is attached already when is delivered. The recommended thickness of cable is AWG#6 copper grounding wire.

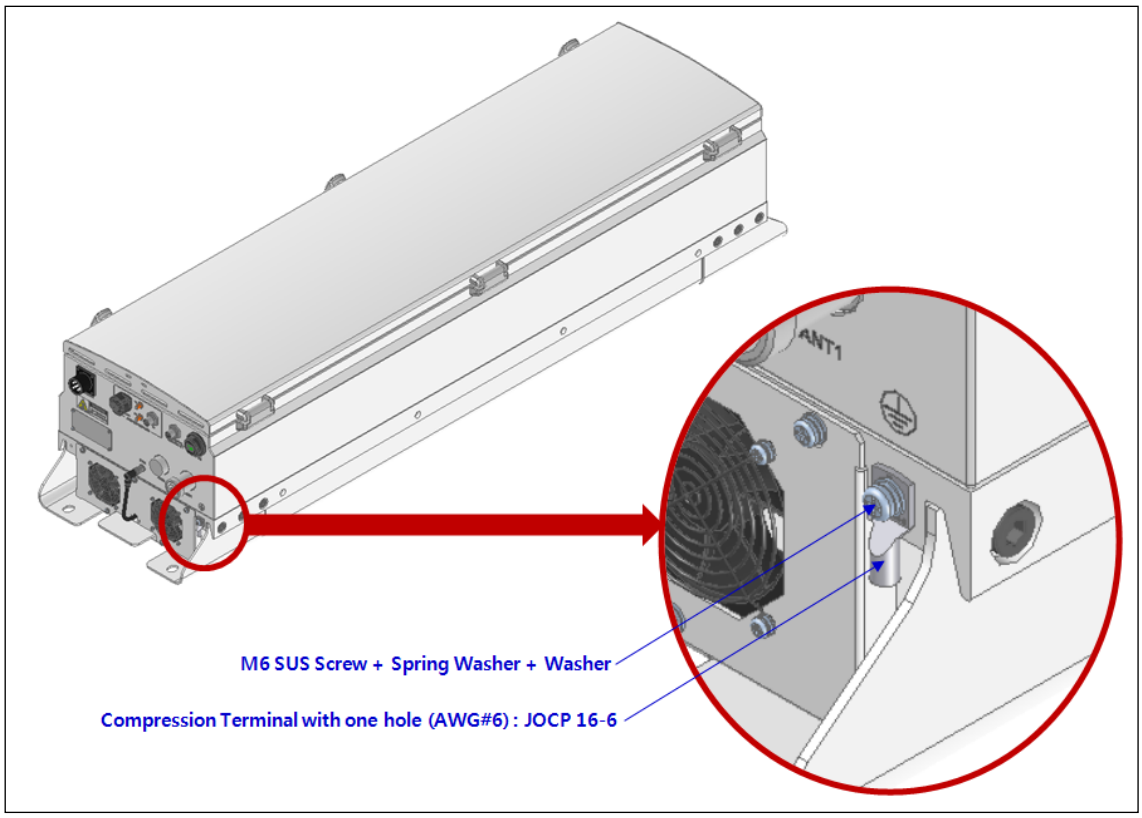

Figure 18. Location of Ground Terminal

The specification of compression terminal is like below.

TUBULAR CABLE LUGS, ONE-HOLE, ROUND COMPRESSED TYPE-CP

- Material : Electrolytic Copper (TPC)
- Surface : Tin Plated
- With Inspection Hole to visually assure full Conductor insertion.
- Color Coded to Show Proper Die Number and Color 10㎟~70㎟
- To IEC 60228 Class 2 and Class 5
- UL Listed 486A-486B up to 35KV

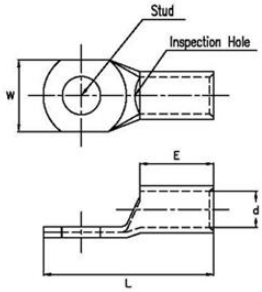

Part Number	Wire Range				Stud Size	Dimension (mm)				Code Cable Die Color & No.	Q'ty/ bag
	CODE		FLEX			W	E	L	d		
	AWG	㎟	AWG	㎟							
JOCP 16-5	6	16	6	16	M5	12	13	29	5.4	Blue 24	300
JOCP 16-6					M6						
JOCP 16-8					M8	14		33			
JOCP 16-10					M10	16		34			

Figure 19. Information of Terminal

The required part number is JOCT 16-6 supporting AWG 6. The way to install the grounding cable comply with below procedures.

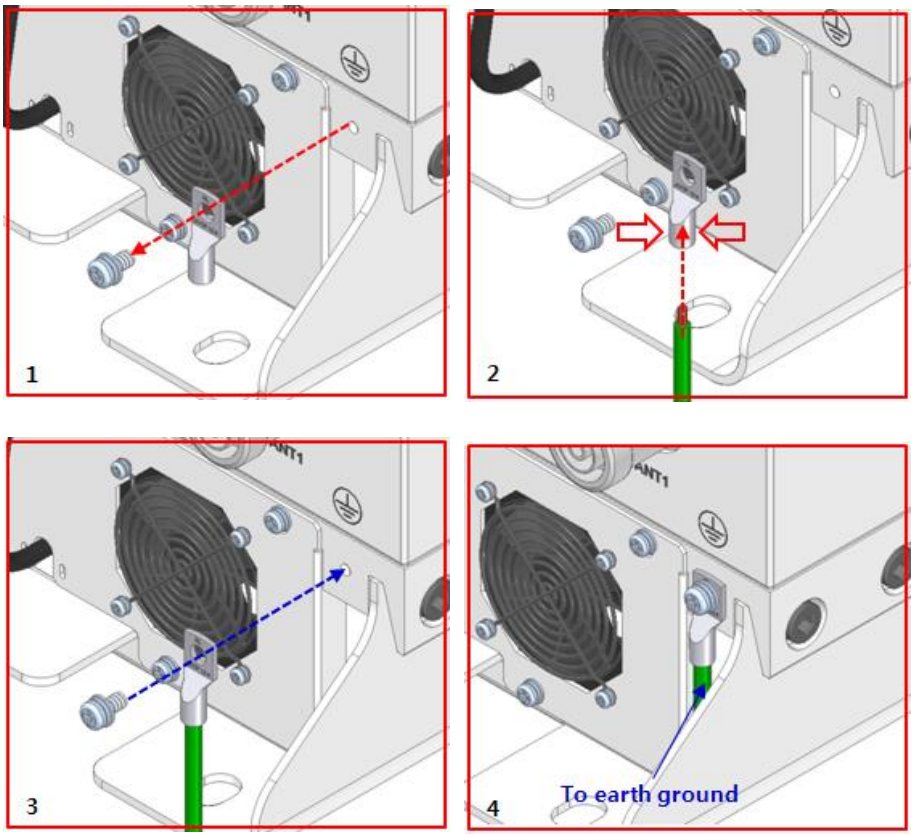

Figure 20. How to install Ground Terminal

The procedures are

1. Loosen a two M6 screws and then take compression terminal off
2. Insert AWG#6 Grounding Wire into terminal and then compress a terminal using tool
3. Assemble the terminal which made in step “2” using 2xM6 screws
4. Cut the ground wire to proper length and connect it to the earth ground source
   (Round terminals located on the side of a 1 mm2 (16 AWG) or more wires Using permanently connected to earth.)

3.1.7 HROU Optical Cable

The Optical Connector is located at the bottom of Remote Unit enclosure fixed. Optical Cable can be connected by using connectors.

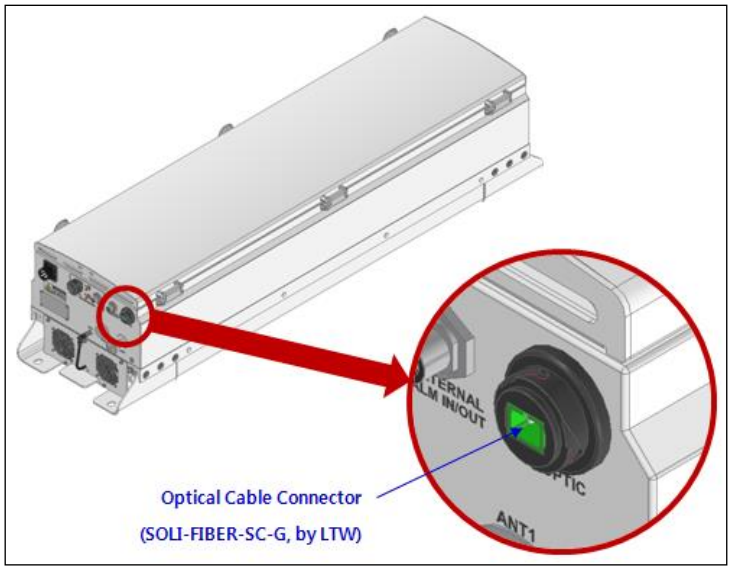

Figure 21. Location of Optical Connector

The specification of compression Optic Connector is like below.

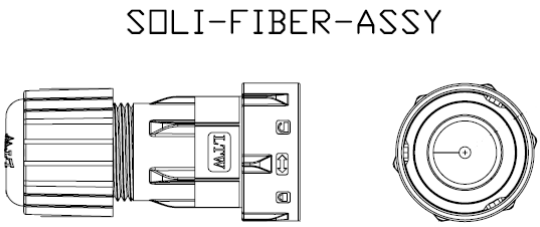

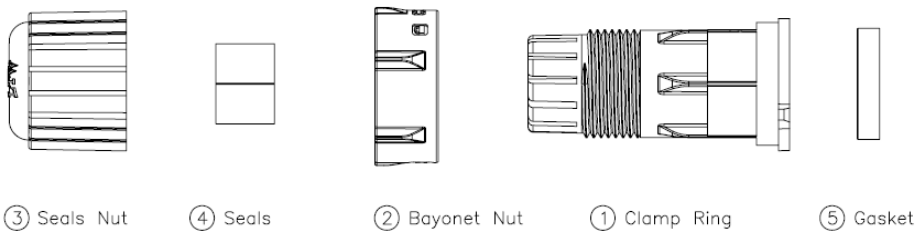

Figure 22. Information of Optical Connector

The way to install the Optical cable comply with below procedures

The procedures are

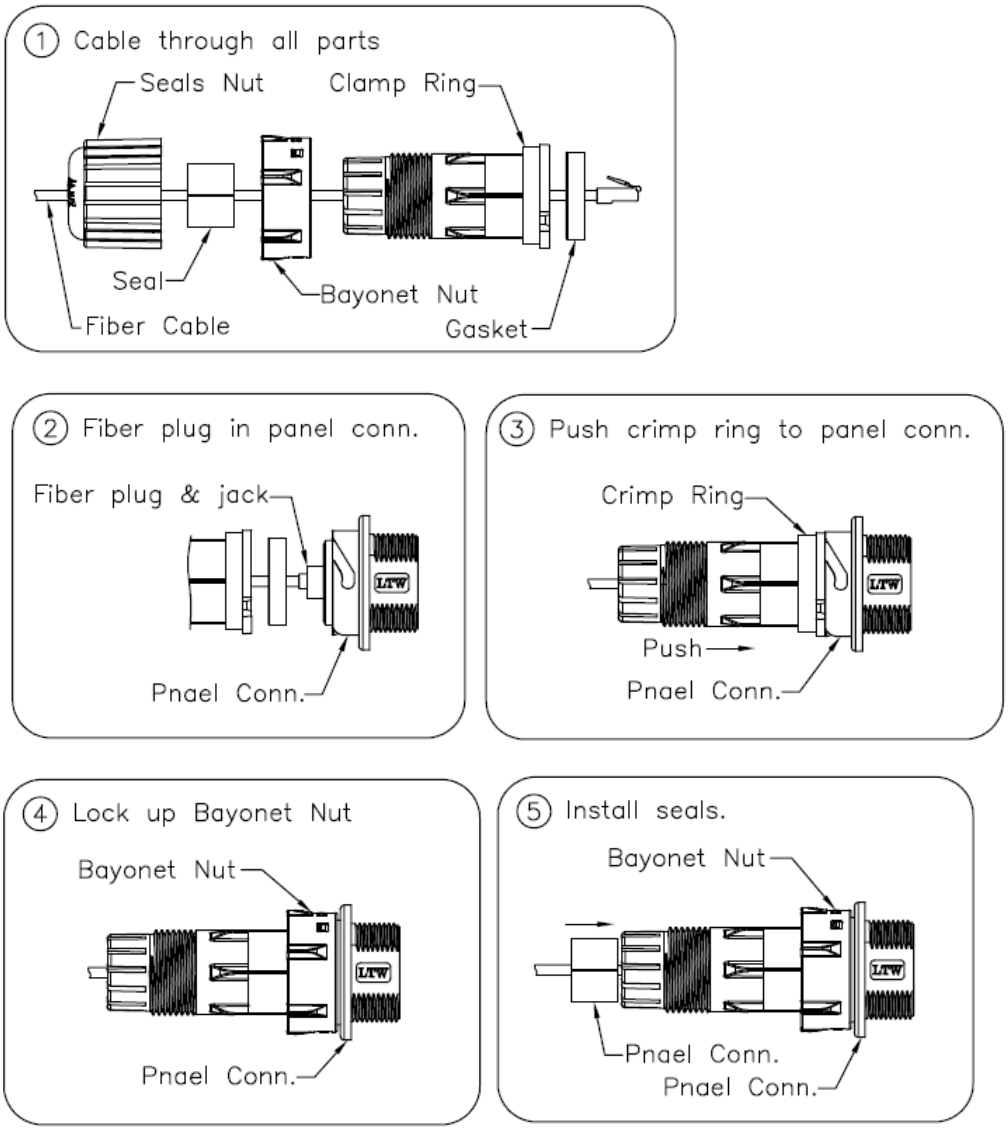

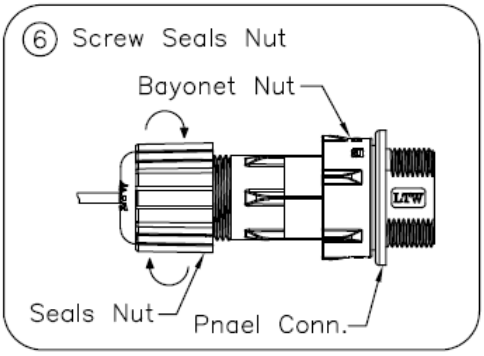

Figure 23. How to install Optical Cabling

3.1.8 HROU ALM IN/OUT Port cabling

The ALM IN/OUT Connector is located at the bottom of Remote Unit enclosure fixed. Cable can be connected by using connectors.

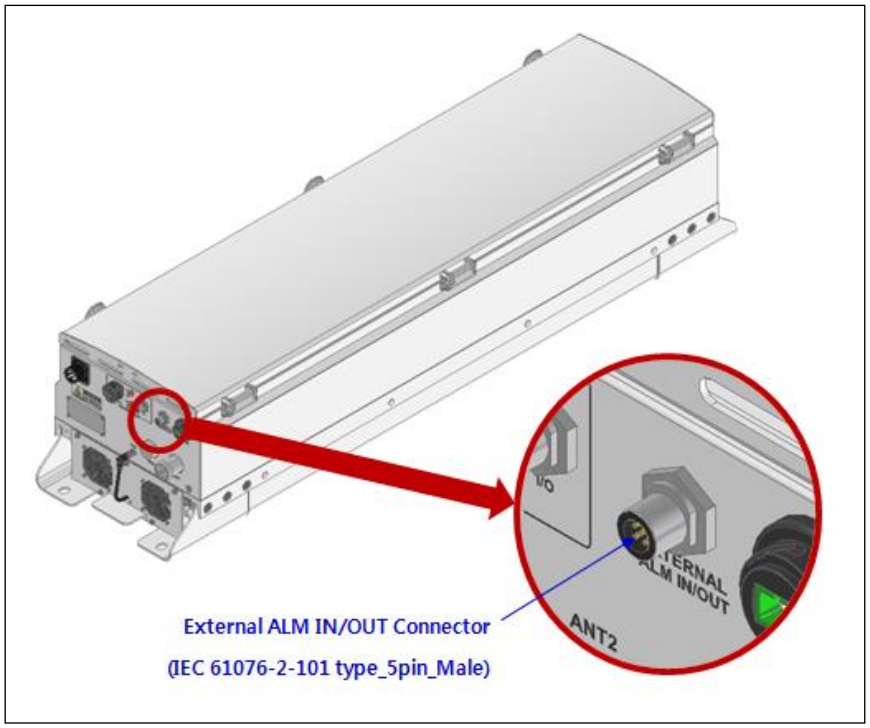

Figure 24. Location of ALM IN/OUT Connector

The specification of compression ALM IN/OUT Connector is like below

IEC 61076-2-101 type_5pin_Female

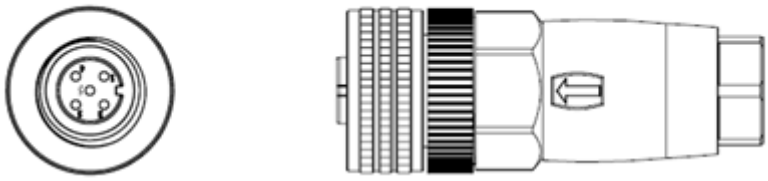

Figure 25. Information of ALM IN/OUT Connector

The way to install the ALM IN/OUT Connector comply with below procedures

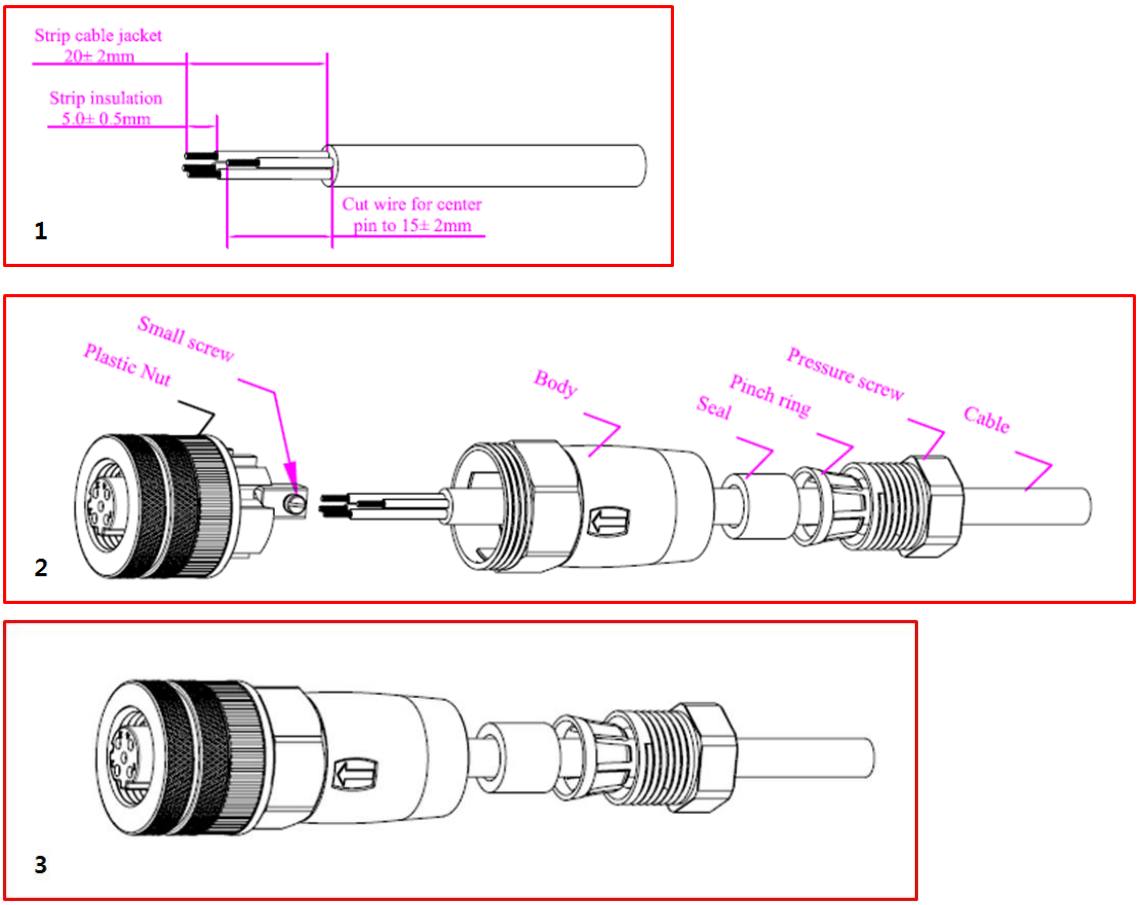

Figure 26. How to install ALM IN/OUT Cabling

The procedures are

Peel off sheath of the cable.

Assemble all components on cable as following.

Connect all wires to insert according to wire list, then tighten all small screws.

The torque for small screws is 0.2Nm.

Assemble plastic nut to main body. Recommended torque : 1.0Nm.

(Note : The key inside the main body must go straight to slot of insert.)

Push the cable seal, pinch ring into the main body, then tighten the pressure screw into the body with recommended torque : 1.0Nm.

3.1.9 Mounting of HRDU

HROU has slots to enable up to four HRDU modules to be mounted in it.
You can mount a HRDU into designated slot surely and should install each HRDU into its designated location as shown in the installation diagram on the door of enclosure.
It is not possible to provide services with a HRDU module alone; you need to connect HRDU cavity duplexer antenna port with CU's designated port.

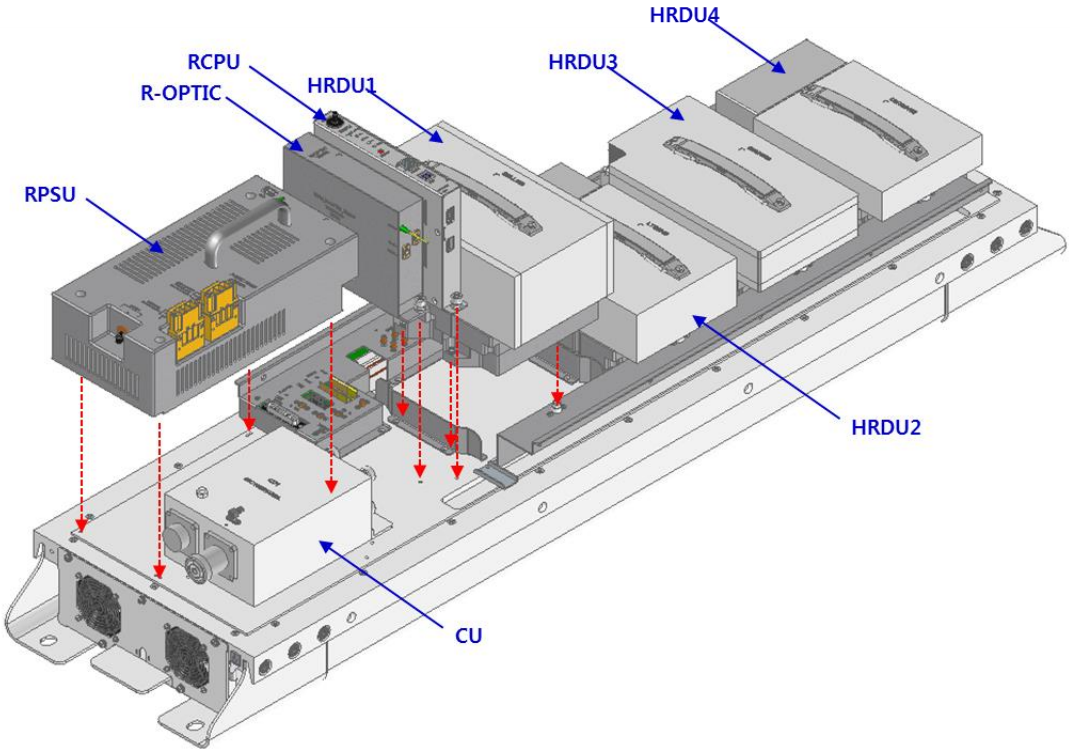

Figure 27. Location of each modules in the HROU

The Remote Unit holds a maximum of 4 HRDUs. Guide brackets on the bottom of each HRDU slot simplify installation as described below. MRDU installation requires a +No.1 tip size screwdriver.

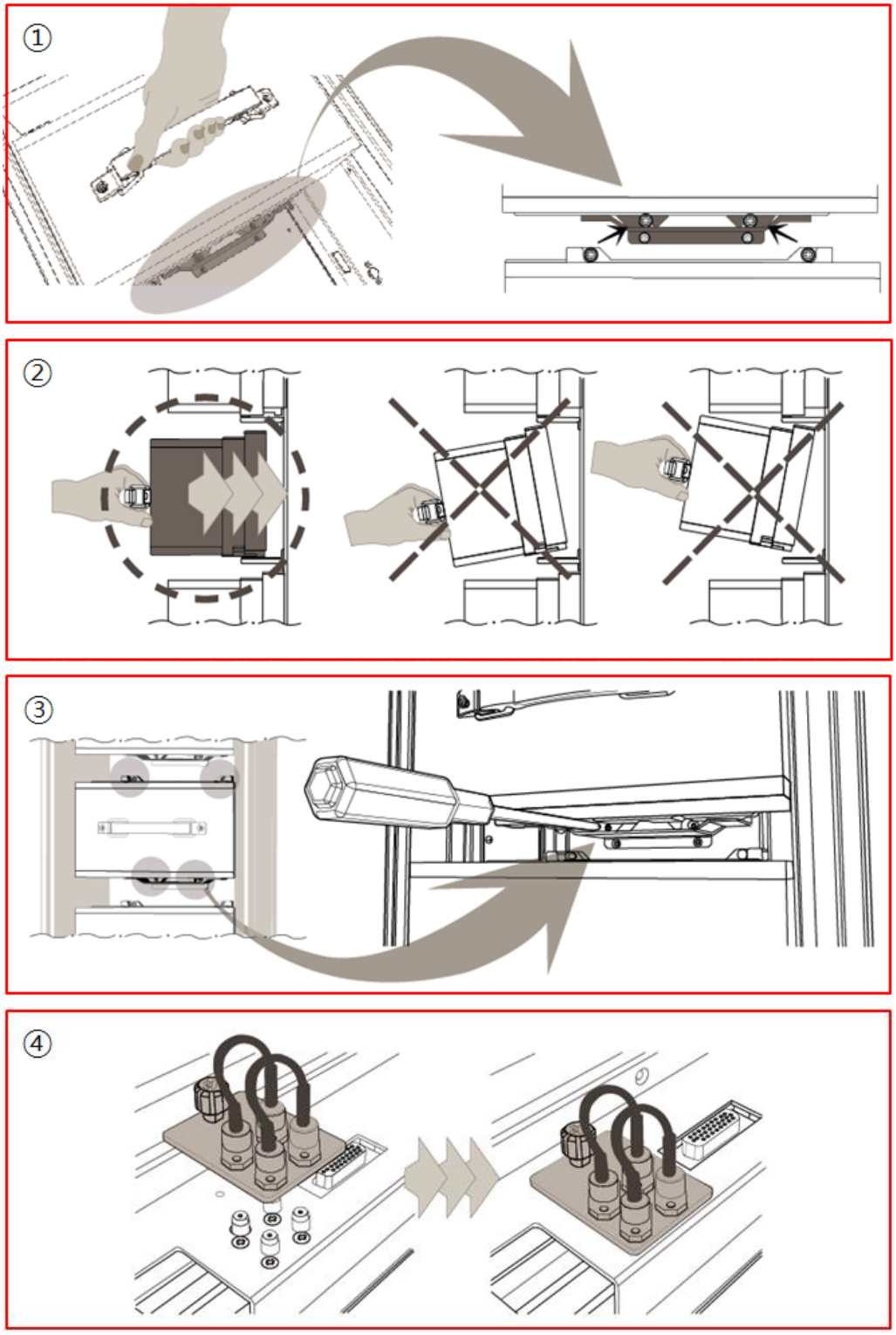

Figure 28.How to mount HRDU

The procedures are

1. Lift the HRDU onto the guide bracket and ensure the MRDU is level left to right
2. Push the HRDU into the corresponding slot in the direction of the heat sink while levelling the MRDU to guide bracket
3. Make sure the HRDU is firmly inserted into the corresponding slot. Tighten the 4 corner screws to secure the unit
4. Install HRDU blank cards in all unused slots in the remote. First insert the blank card into the corresponding slot, then tighten the captive screw to secure it

"The Manufacturer's rated output power of this equipment is for single carrier operation. For situations when multiple carrier signals are present, the rating would have to be reduced by 3.5 dB, especially where the output signal is re-radiated and can cause interference to adjacent band users. This power reduction is to be by means of input power or gain reduction and not by an attenuator at the output of the device."

RSS-GEN, Sec. 7.1.2 – (transmitters)

Under Industry Canada regulations, this radio transmitter may only operate using an antenna of a type and maximum (or lesser) gain approved for the transmitter by Industry Canada. To reduce potential radio interference to other users, the antenna type and its gain should be so chosen that the equivalent isotropically radiated power (e.i.r.p.) is not more than that necessary for successful communication.

Conformément à la réglementation d'Industrie Canada, le présent émetteur radio peut fonctionneravec une antenne d'un type et d'un gain maximal (ou inférieur) approuvé pour l'émetteur par Industrie Canada. Dans le but de réduire les risques de brouillage radioélectrique à l'intention desautres utilisateurs, il faut choisir le type d'antenne et son gain de sorte que la puissance isotroperayonnée quivalente (p.i.r.e.) ne dépassepas l'intensité nécessaire à l'établissement d'une communication satisfaisante.

RSS-GEN, Sec. 7.1.2 – (detachable antennas)

This radio transmitter (identify the device by certification number, or model number if Category II)has been approved by Industry Canada to operate with the antenna types listed below with the maximum permissible gain and required antenna impedance for each antenna type indicated. Antenna types not included in this list, having a gain greater than the maximum gain indicated for that type, are strictly prohibited for use with this device.

Le présent émetteur radio (identifier le dispositif par son numéro de certification ou son numéro de modèle s'il fait partie du matériel de catégorie I) a été approuvé par Industrie Canada pour fonctionner avec les types d'antenne énumérés ci-dessous et ayant un gain admissible maximal et l'impédance requise pour chaque type d'antenne. Les types d'antenne non inclus dans cette liste,ou dont le gain est supérieur au gain maximal indiqué, sont strictement interdits pour l'exploitation de l'émetteur.

RF Radiation Exposure

This equipment complies with RF radiation exposure limits set forth for an uncontrolled environment. This equipment should be installed and operated with a minimum distance of 500 cm between the radiator and your body. This transmitter must not be co-located or operating in conjunction with any other antenna or transmitter. RF exposure will be addressed at time of installation and the use of higher gain antennas may require larger separation distances.

RSS-102 RF Exposure

L'antenne (ou les antennes) doit être installée de façon à maintenir à tout instant une distance minimum de au moins 600 cm entre la source de radiation (l'antenne) et toute personne physique. Cet appareil ne doit pas être installé ou utilisé en conjonction avec une autre antenne ou émetteur.

- IC Booster warning label message should include

  WARNING: This is NOT a CONSUMER device. It is designed for installation by an installer approved by an ISED licensee. You MUST have an ISED LICENCE or the express consent of an ISED licensee to operate this device.