USER GUIDE
HP 100 / HP200 / HP200E

HOTEL DOOR LOCK

HP100

HP200

HP200E

Table of Contents

1. Understanding HP100, HP200, HP200E Hotel Door Lock 3

1.1 What is HP100, HP200, HP200E Hotel Door Lock? 3
1.2 Features by model 3
1.3 Operation cards 5

2. Types of Lock Operating Scenario 6

2.1 Guest Card issue 6
2.2 Using RFID card 8
2.3 Using Smartphone 9
2.3.1 Synchronizing guest card to Smartphone 9
2.3.2 Using Mobile Bluetooth (Esmart Sync) 11

3. Lock Operation 15

3.1 Lock Installation 15
3.2 Lock Setting(LIS) card 18
Main Item Description 18
3.4 Open in Emergency 20
Main Item Description 21
3.5 Low Battery warning and battery change 22

4. Specification 24

5. Indication Instruction 24

ANNEX A Beep & LED Table & Trouble Shooting 25

6 Regulatory Statement 27

1. Understanding HP100, HP200, HP200E Hotel Door Lock

1.1 What is HP100, HP200, HP200E Hotel Door Lock?

- HP100, HP200, HP200E hotel door lock is operated by either 13,56 MHz RF keys or Mobile.
- HP100, HP200, HP200E can work as both offline (standalone) and online mode.
- To set HP100, HP200, HP200E as online system, additional peripherals such as Access point, Server and client software are necessary.

1.2 Features by model

FEATURES	HP100	HP200	HP200E
Front Design			
e-Paper display	-	-	Yes
Touch Key (12 Key)	-	Yes	-
Support Mortise	ANSI(top), ANSI Standard(bottom), Euro #6	ANSI(top), ANSI Standard(bottom), Euro #6	ANSI(top), ANSI Standard(bottom), Euro #6
Support deadbolt	Yes	Yes	Yes
Panic release	Yes	Yes	Yes
Mechanical key override	Yes	Yes	Yes
Low battery indicator	Yes	Yes	Yes

Power supply	4 x AA **(Alkaline battery)**	4 x AA **(Alkaline battery)**	4 x AA **(Alkaline battery)**
Battery Lifetime	18 months for wireless online lock 24 months for standalone lock	18 months for wireless online lock 24 months for standalone lock	18 months for wireless online lock 24 months for standalone lock
Block/Unblock card	Yes	Yes	Yes
Online Intrusion alarm (over 3 times of unauthorized open trial)	Yes	Yes	Yes
Online Ajar alarm	Yes	Yes	Yes
Instant Stay Extension	Yes	Yes	Yes
Instant Room change	Yes	Yes	Yes
Automatic unlock/lock	Yes	Yes	Yes
Passage mode	Yes	Yes	Yes
Remote audit trail	Yes (Online: Unlimited/Offline:2,000 events)	Yes (Online: Unlimited/Offline:2,000 events)	Yes (Online: Unlimited/Offline:2,000 events)
Remote Maintenance reporting	Yes	Yes	Yes
Mobile Key Access	Yes	Yes	Yes

1.3 Operation cards

Card Name	Description	Card type
Key card	• Security Key value to be loaded to locks at scanning. • Then, the locks will accept only the RFID cards which have the same security key value.	Mifare 1KB
Setup card	• Lock will be programmed with various options at scanning. • Setup card can be set from PTHMS Client Pro Software	
Staff card	• For staffs access card • Set name/title/authority/holiday, etc.	
Emergency card	• All rooms can be opened with an emergency card. Particular attention should be paid to loss	
Blocking card	• A Blocking card is used to block all user groups on a particular door. For example, this card is used to block all groups except Maid by reading the blocking card when Maid cleans the Fitness Club.	
Clearance card	• A card that cancels the registered Guest Card. This card can only be used after the Employee (Maid) Card has been read.	
Passage Mode card	• A card to unlock the door until the specified time for the defined door.	
Privacy card	• It is operated by the Toggle concept in order to display “D.N.D” on the door with the card provided in each room. It can be operated only when Guest Card is registered. In order to delete it, Maid must read Maid Card/Employee Card and then Erase Card/Power-Down Card to cancel it, or it will be automatically cancelled when a new guest card is registered.	
Audit trail card	• A card for collecting usage histories for each lock. (Up to 2000 cases)	Combi card (Mifare + Kona COS)
Lock info card	• A card to read the setting value of each door.	

2. Types of Lock Operating Scenario

HP100/HP200/HP200E Hotel Door locks are designed to work for the various operation requirements by simple set up process. Following operation modes can be set by hotel staffs and guests.

2.1 Guest Card issue

Guest issue

It is a screen for checking in and issuing a guest card for the guests who stay in a general room.

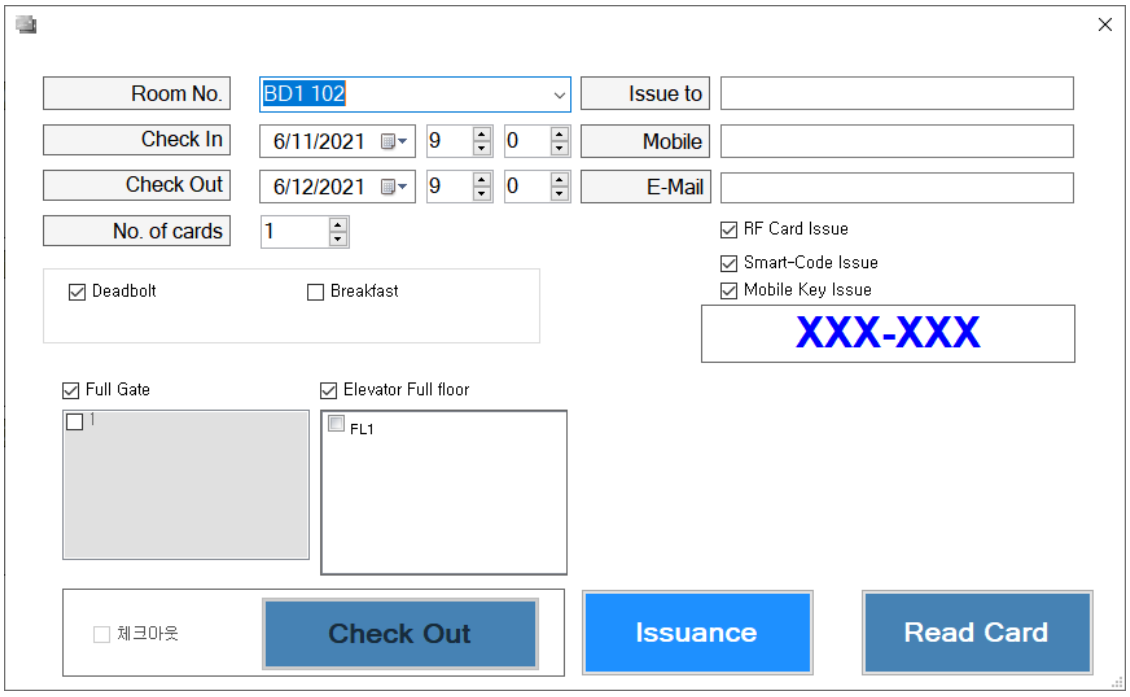

Main Item Description

Item	Description
Room No.	Room Number you just chose to check-in will be shown. - Room number must be at least 3 digits for floor number and room number. . Ex) Floor→1, Room→1 ➔ “101”

	Floor→10, Room→2 ➔ “1002” Floor→11, Room→12 ➔ “1112” ※ If you enter more than 10 floors and input 1~9 rooms, please note that it will be recognized as another floor when the number is below 4 digits.
Check In	Check in date and time
Check Out	Check out date and time
No. of cards	Number of guest card you are going to issue
Issue to	Guest’s name
Mobile	Guest’s mobile number (Smartcode will be sent to this number)
E-Mail	Guest’s E-mail address (Mobile key app link will be sent to this address)
Option (Combo box)	If ticked, it means it will be available for the option. - Deadbolt: Deadbolt availabilty - Breakfast: Breakfast option - Full Gate: Gate that the card will be accepted Individual gates can be ticked separately. - Elevator Full floor: Accessibility of the elevators(floor) Individual floors can be ticked separately. - RF Card Issue: If you want to issue the RF card - Smart-code Issue: If you want to issue smartcode to the guest’s mobile phone. - Mobile key Issue: If you want to issue mobile key to the guest. - Check-out: If you are checking out.

If you have selected the item you want to use, you can place the card to be issued on the DE-620 Reader and press 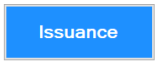

button to issue the card.

If you are issuing multiple cards, you will be prompted to put the next card on the reader.

If the card is lost, reissue the card in the Reissuance guest card section(by clicking mouse right-button on the room number).

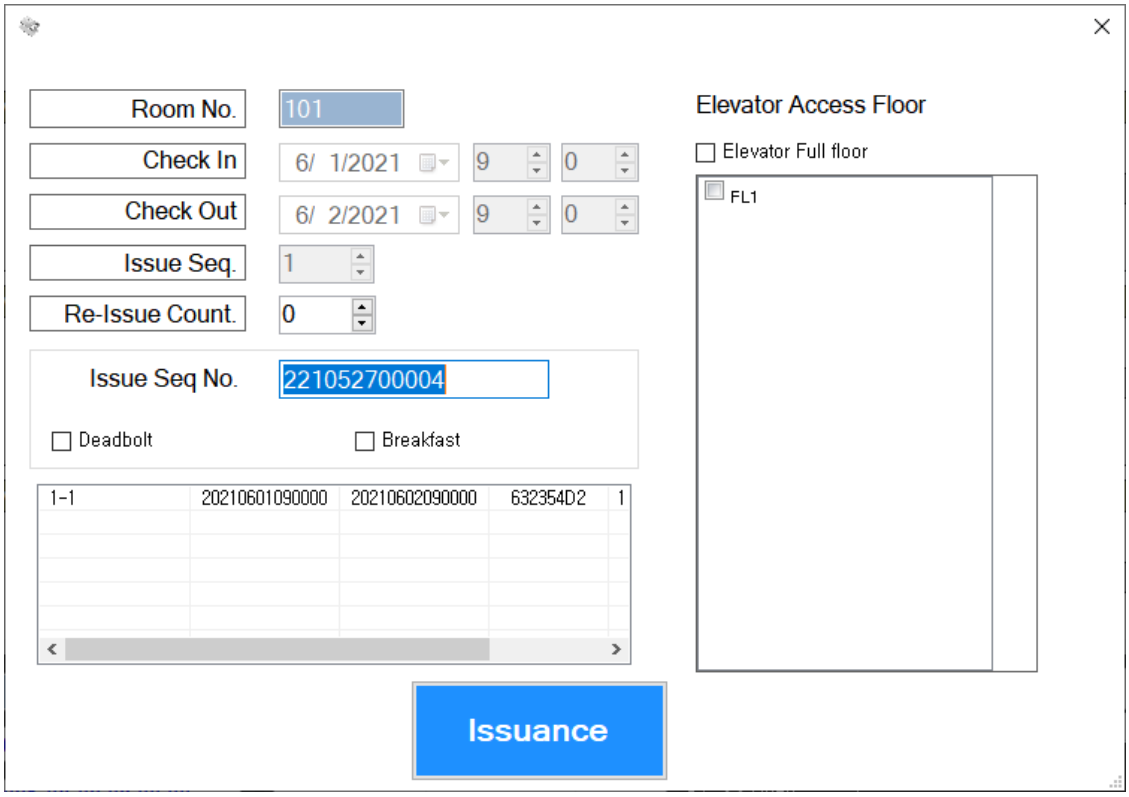

2.2 Using RFID card

- Once successfully complete above steps, guest card may scan the lock and it will work nice and easy.

2.3 Using Smartphone

- Passtech's all hotel door locks are wireless online, which means they are operated not only with RFID credentials, but also with your smartphone by incorporating an innovative BLE mobile access technology. The solution provides more advanced and efficient approach towards managing the rooms at various kinds of venues where requires highest level of security

2.3.1 Synchronizing guest card to Smartphone

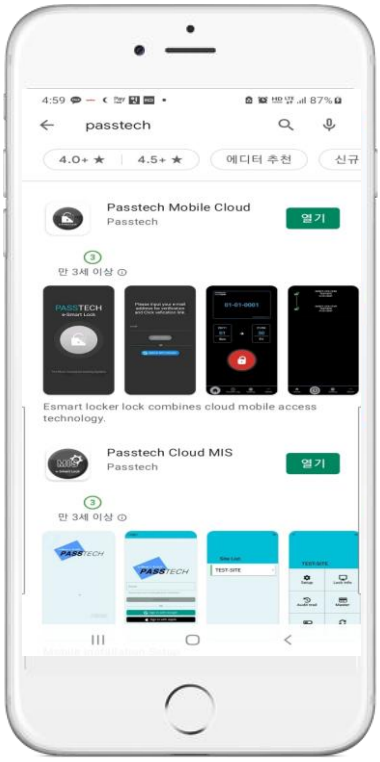

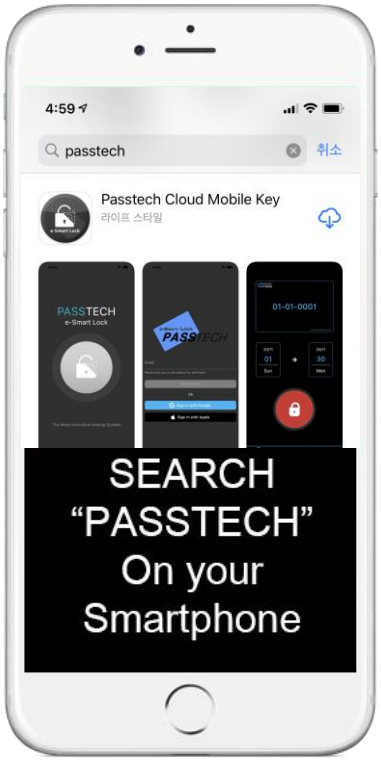

1. Go visit "Google Play Store" or "APP Store", and search "PASSTECH".
2. Download Application (Passtech Mobile Cloud – Android / Passtech Cloud Mobile Key – Apple) and install it in the guest's smartphone.
3. When execute Application, your guest will see below display screens.
4. From this step, it is simple and important to sync to mobile. When the guest enters the hotel room with RFID guest Card, the guest opens the door at first time.
5. <u>Then guest should open the door from inside to outside of the room.</u>
6. Scan Guest card on the lock 2 times.(Described above ①&②&③)

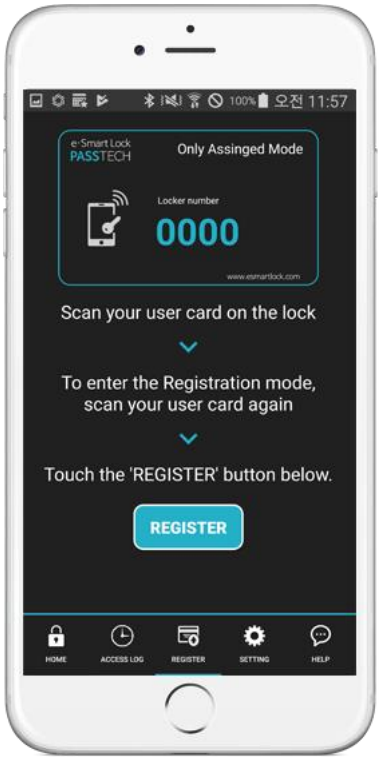

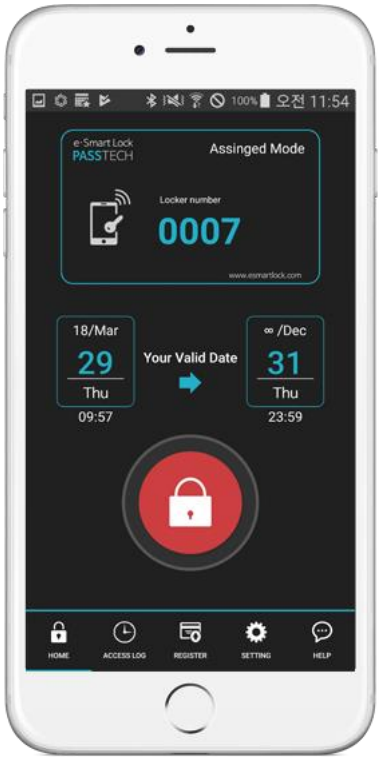

⑦	⑧

7. Right after scan the Guest card, press “Register” button on their Application. (Displayed as above picture ⑦)
8. The screen will display guest card information as above picture. (Displayed as above picture ⑧)

2.3.2 Using Mobile Bluetooth (Esmart Sync)

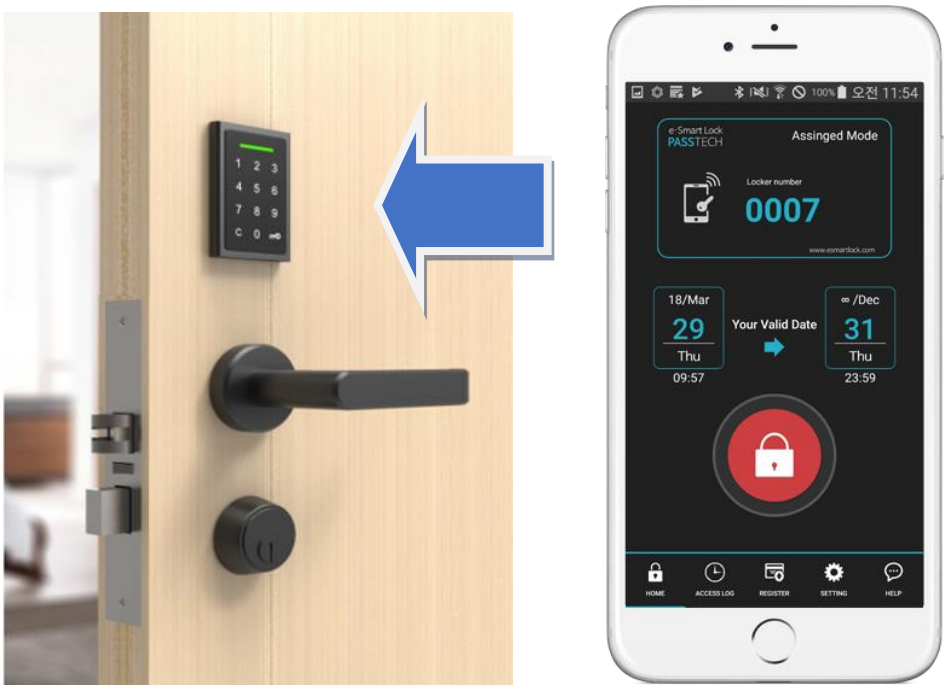

- Check your room number and valid time, if those are all set successfully, press Red button on the display, then it will open using BLE communication.

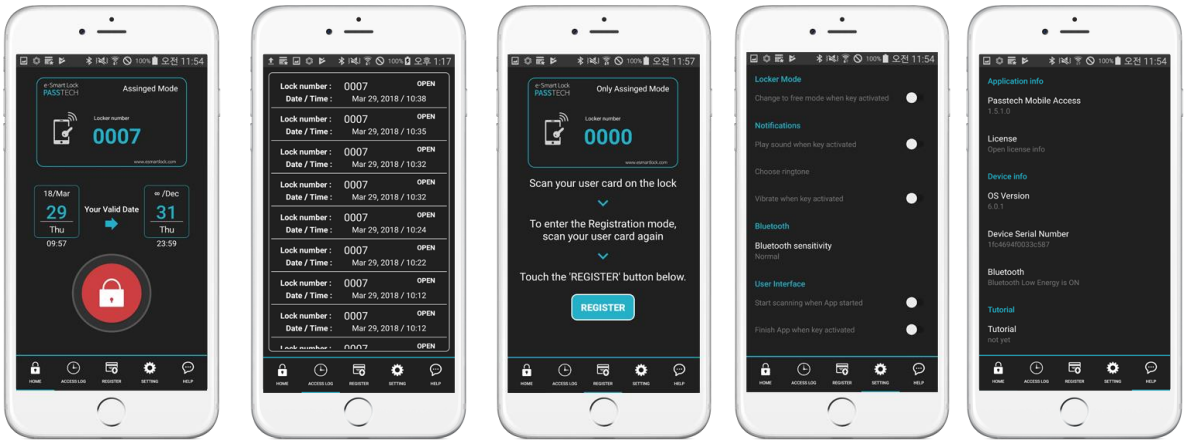

Display	Explanation
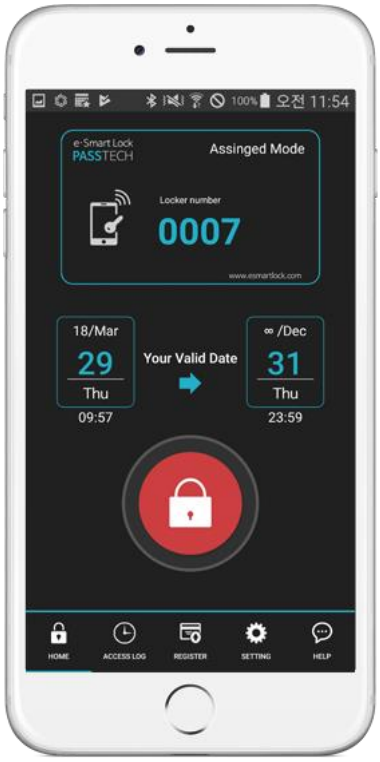	Guest will mainly use this display. - Operation Mode - Lock Number - Valid time - Open command
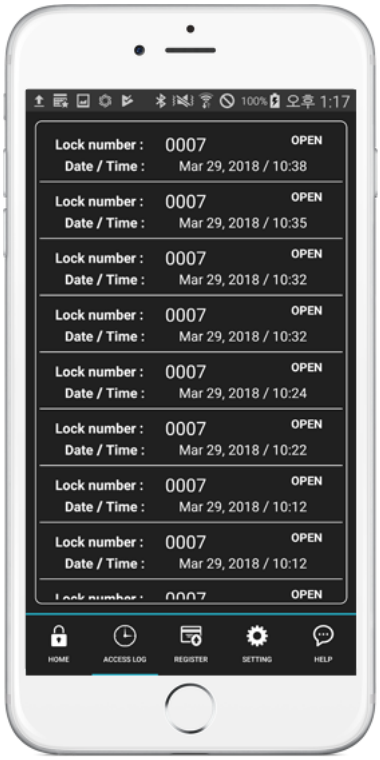	This is display for log history. All history of their logs will be displayed, it's so, the guest shouldn't require to visit front desk for ask their log history.

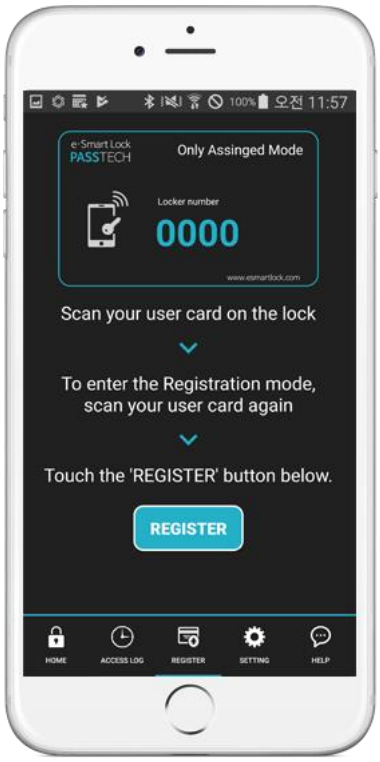	This is for register the lock on mobile.
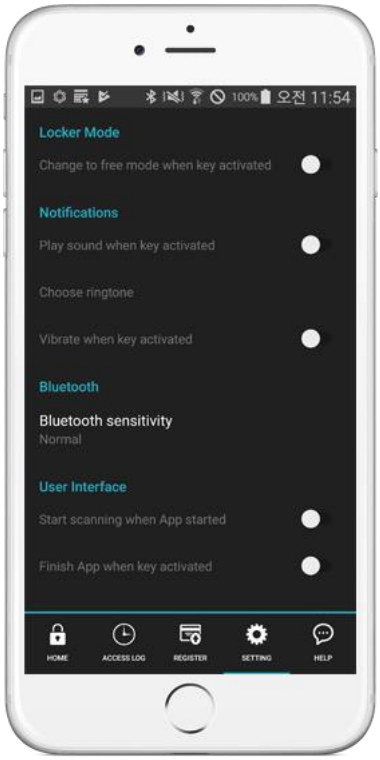	This is display for setting mobile option such as sound on/off, vibration on/off and Bluetooth sensitivity, etc.

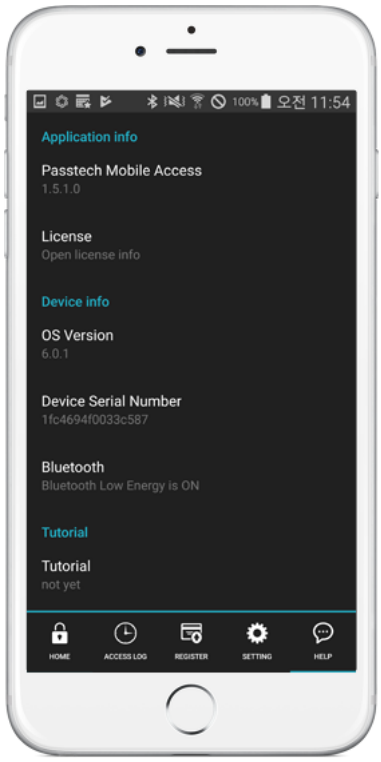	This is application information display.

3. Lock Operation

HP100, HP200, HP200E can be accessed with both RF tags and BLE Mobile.

3.1 Lock Installation

- **Dimensions**

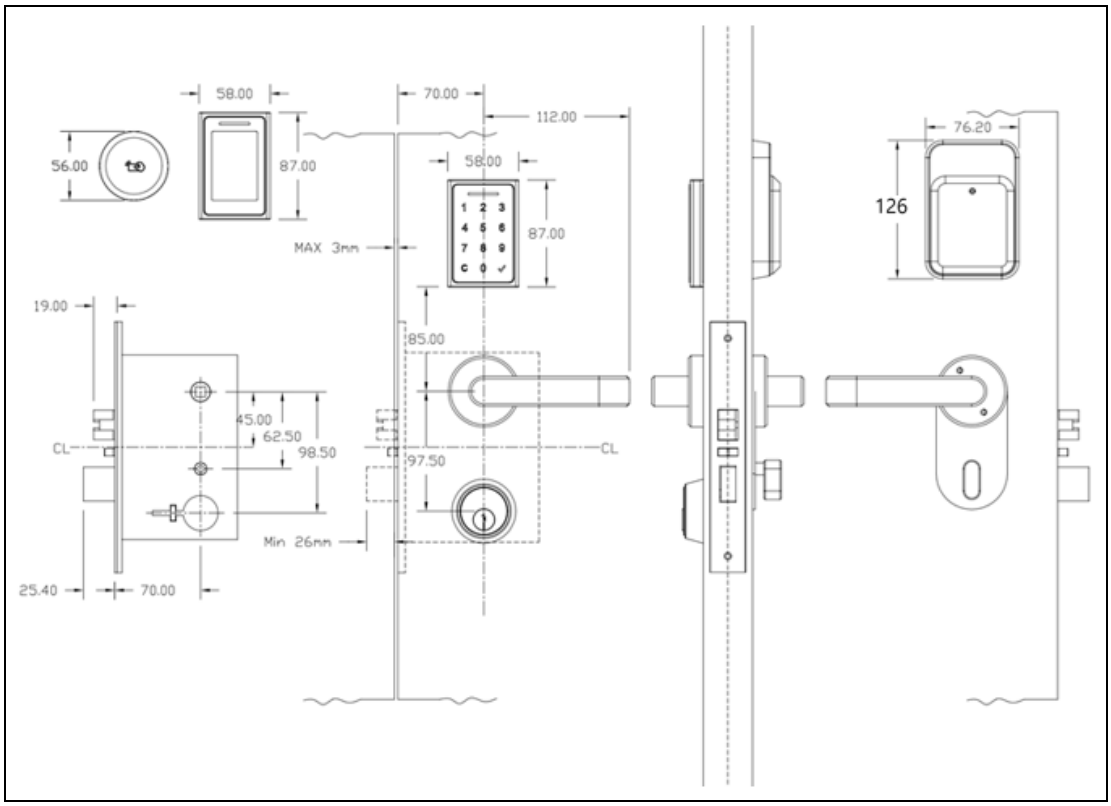

<ANSI STD (Bottom)>

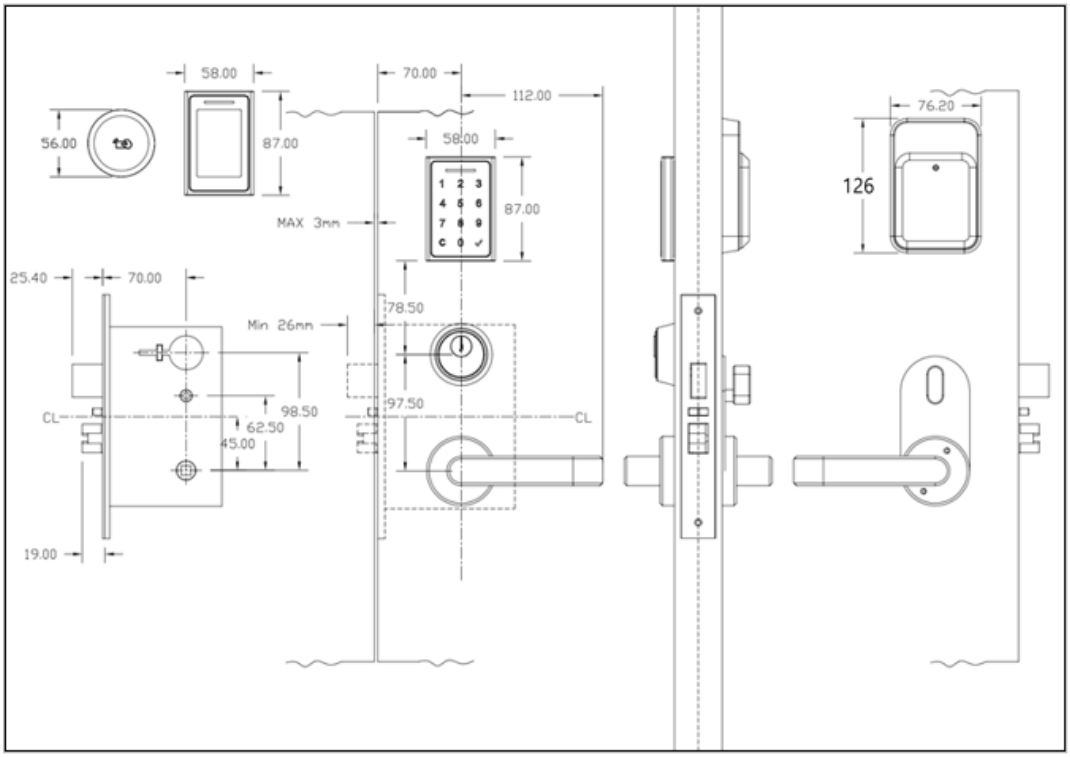

<ANSI Top>

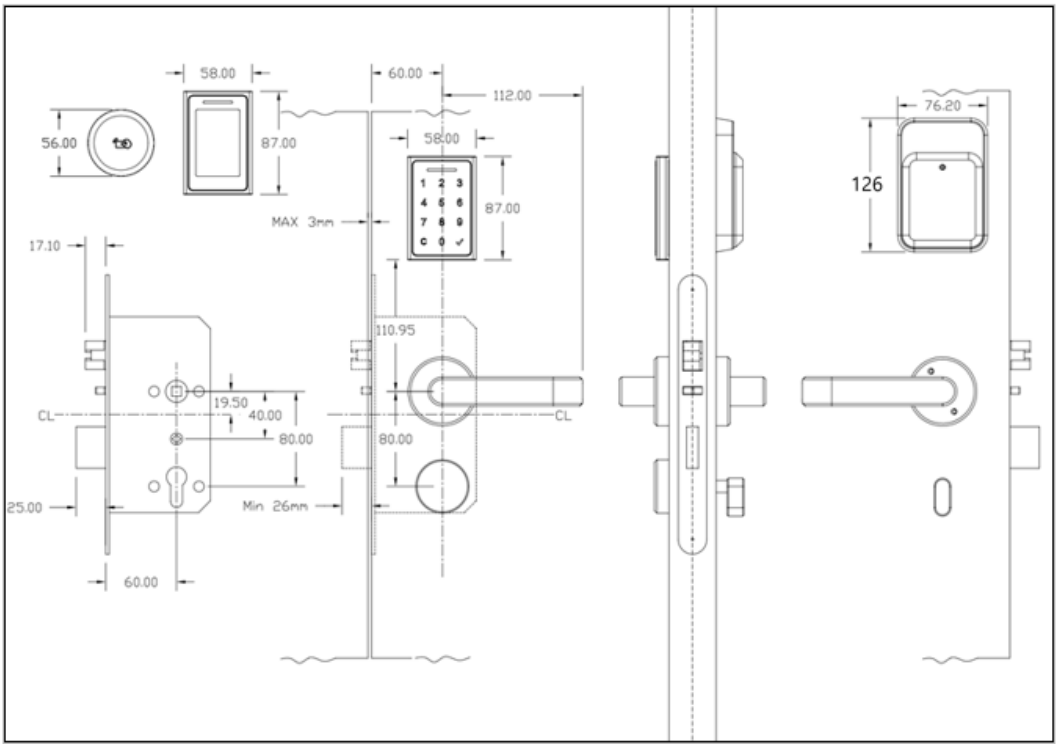

<Euro #6>

- **Handles**

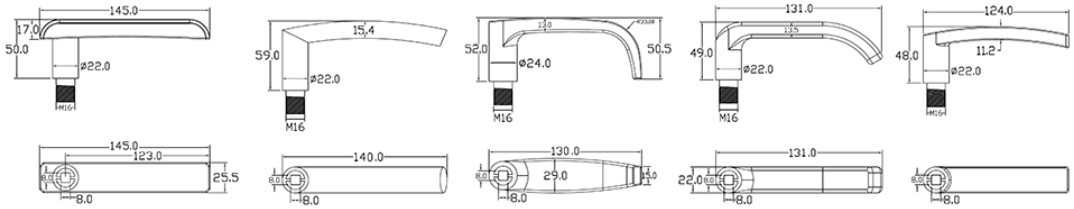

- **Installation**

-

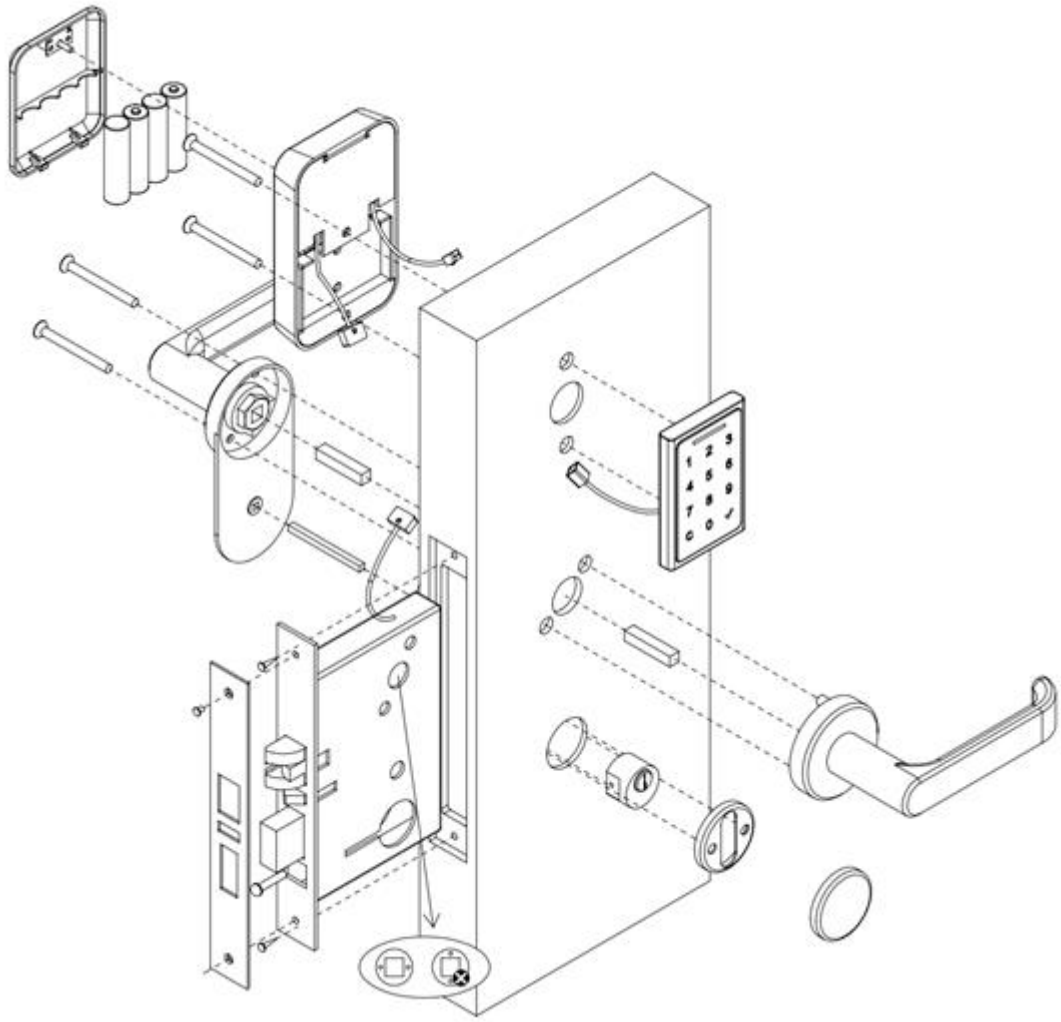

☞ Recommended installation is executed by installation experts.

3.2 Lock Setting(LIS) card

A screen for issuing a Setup card for setting installation information in each door lock after the locks are installed.

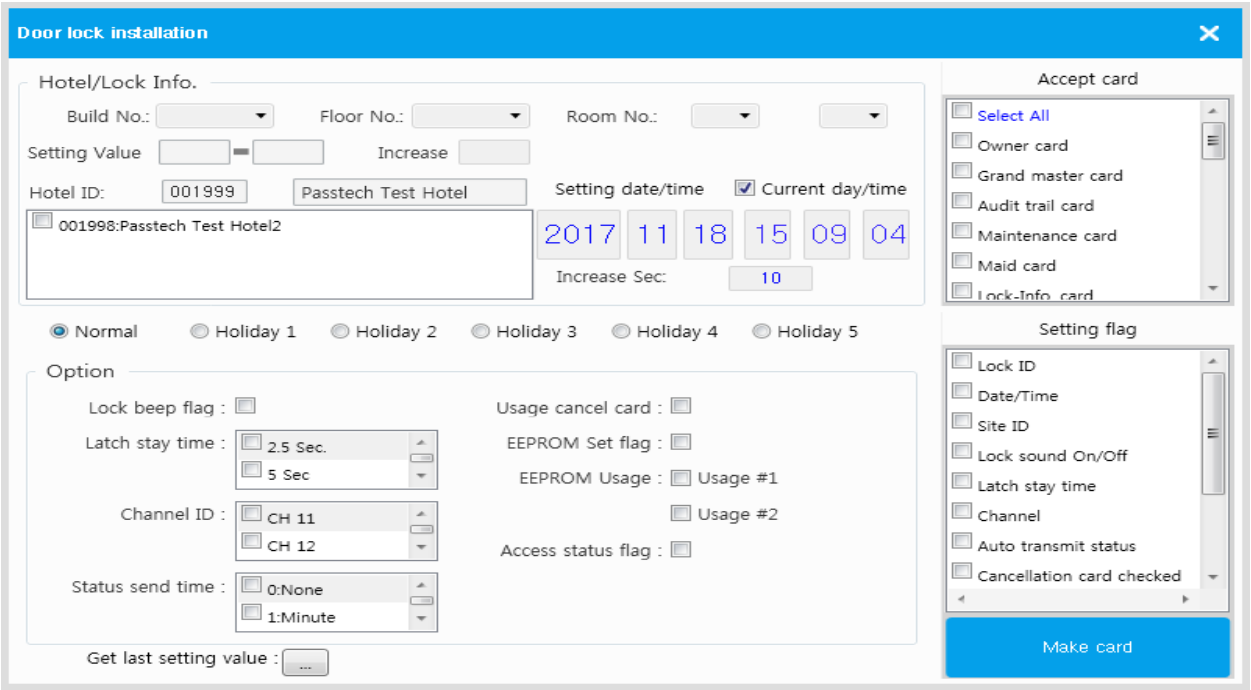

Main Item Description

Group	Item	Description
Hotel/Lock Info.	Build No.	Building No.(1~99) ※ Applicable only if you select the corresponding letter in the Combo Box.
	Floor No.	Floor No. ※ Applicable only if you select the corresponding letter in the Combo Box.
	Room No.	Room No. (From ~ To) ※ Applicable only if you select the corresponding letter in the Combo Box.
	Setting value	From/To Value of selected

		Build/Floor/Room
	Increase	Number of selected rooms
	Hotel ID	- Shows the Hotel ID registered in Account's Hotel info. - If the Issuer Key is same and the Affiliate ID is wrong, you can select whether to accept it from the Listbox.

Group	Item	Description
Hotel/Lock Info.	Setting date/time	- If you select Current day/time, it is set to the current time of the computer. - If not selected, it is set to the time specified by the user.
	Increase Sec	It sets the time to set the lock time by increasing the time by several seconds everytime Door lock is set.
Time Schedule	Normal	Uses Normal Schedule of Access Time schedule set in Staff Card.
	Holiday1/ Holiday2/ Holiday3/ Holiday4/ Holiday5	Use the corresponding Holiday Schedule in the Access Time schedule set in the Staff Card.
Option	Lock beep flag	Use Buzzer on Door
	Latch stay time	The Latch time of staying (sec) after opening.
	Status send time	The time(minute) for transmitting the current state of the Door lock from time to time.
	Usage cancel card	Use of Cancel card(for Checking)
	EEPROM set flag	Not currently enabled.(Future)
	EEPROM Usage	Usage #1/#2 (Future)
	Access status flag	Future

Accept Card	Accept card	Type of Staff card accepted from Door Lock
Setting flag	Setting flag	Whether to apply what you checked in the Option to the Door lock.

3.4 Open in Emergency

In case of Emergency such a fire or any types of disasters that require urgently evacuate the building; there are two ways to open all locks.

- **Emergency Open (Client Software)**

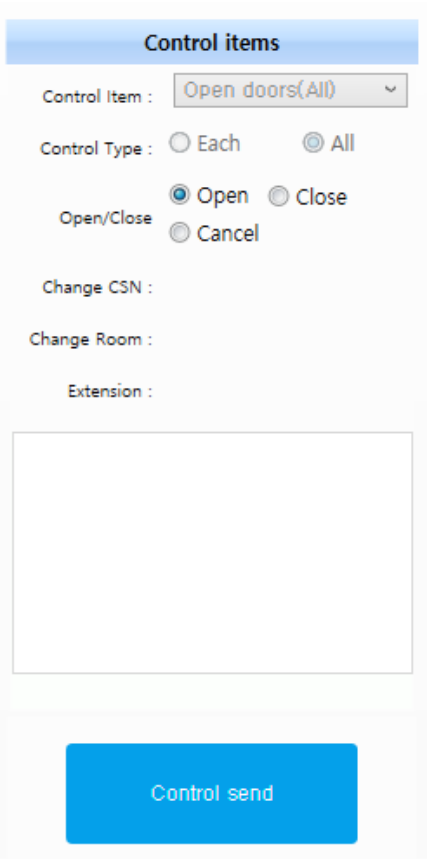

- From Client Software, in right hand corner, you may see as above picture.
- Click “Open” and “Control send” button, then it will send the command AP(Access Point) and when you touch the lock to wake it up, then the lock will be open.

- Emergency Card

Emergency card is a card with unlimited access, which means you have unlimited access to all the doors of the hotel. If you lose the card, you must immediately register the BL so that it cannot be used.

Note that an Emergency card must be issued at installation time, but you may issue an emergency card later if necessary.

It is important to keep Emergency card in a safe place when not in use. The Emergency card is opened at the time of usage and remains open until the card is used to close the door. In other words, it performs the Toggle function.

If the door is open, it can also be closed by the close door command from the system.

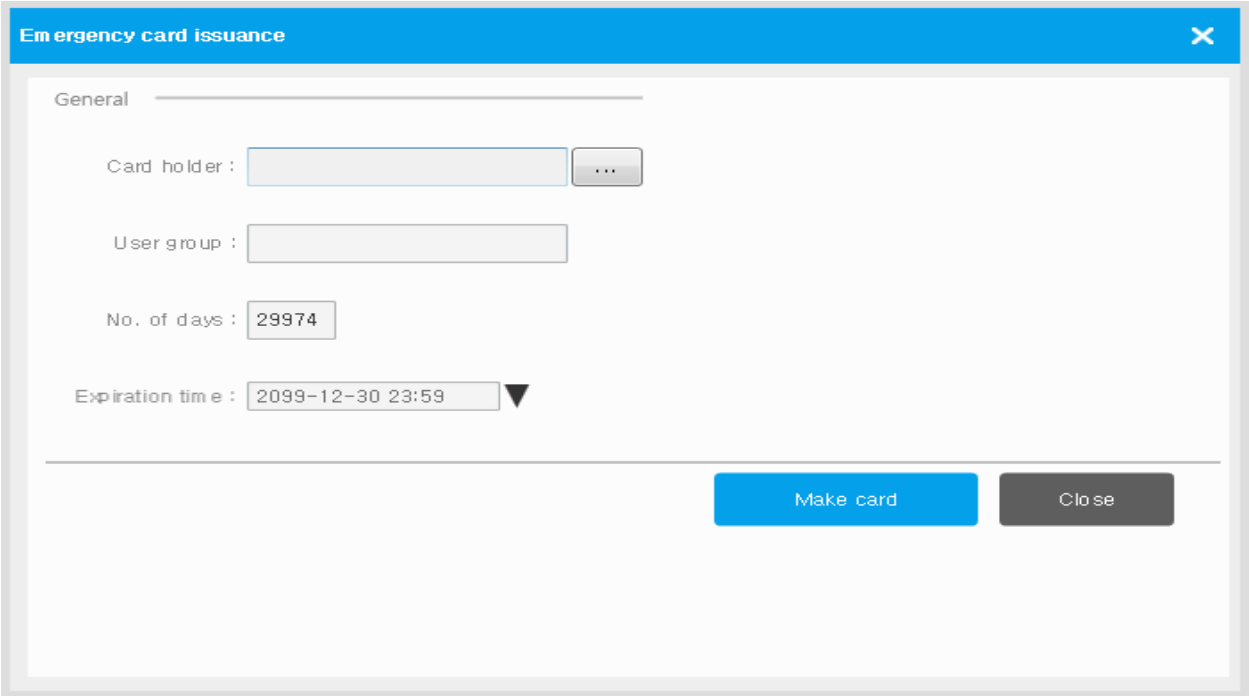

Main Item Description

Group	Item	Description
General	Card Holder	Guest Card Holder Staff Name
	User group	Card type by Staff
	No. of days	Date of use
	Expiration time	Expiration date and time

After selecting the card holder, you can place the card to be issued on the DE-620

Reader and press 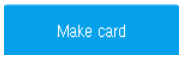

button to issue the card.

3.5 Low Battery warning and battery change

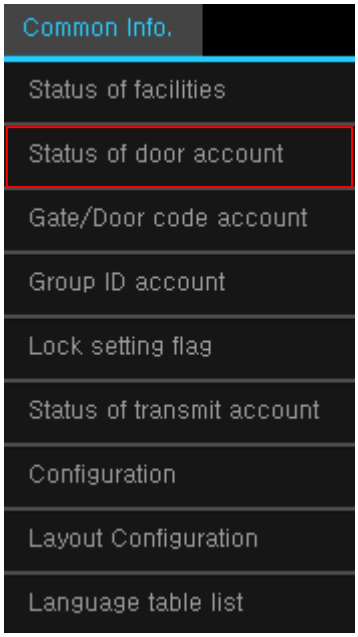

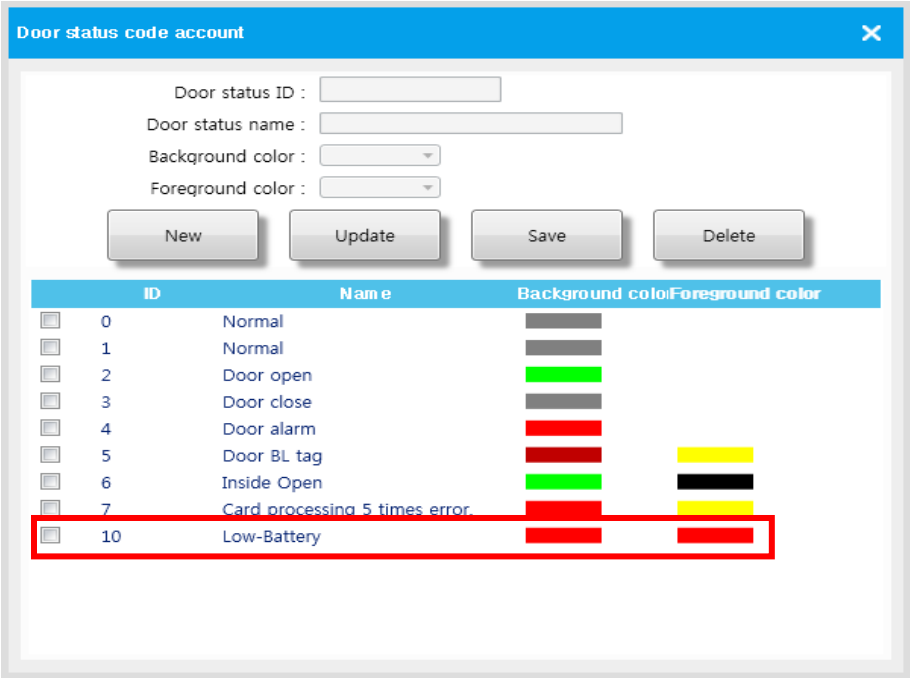

This is the place to manage the door status code and it is mainly used to display the status information about the open/close of the Door Symbol.

When you've set your account as above, the Low-Battery alarm will display.

Recommended to change the battery in case of display "Low Battery".

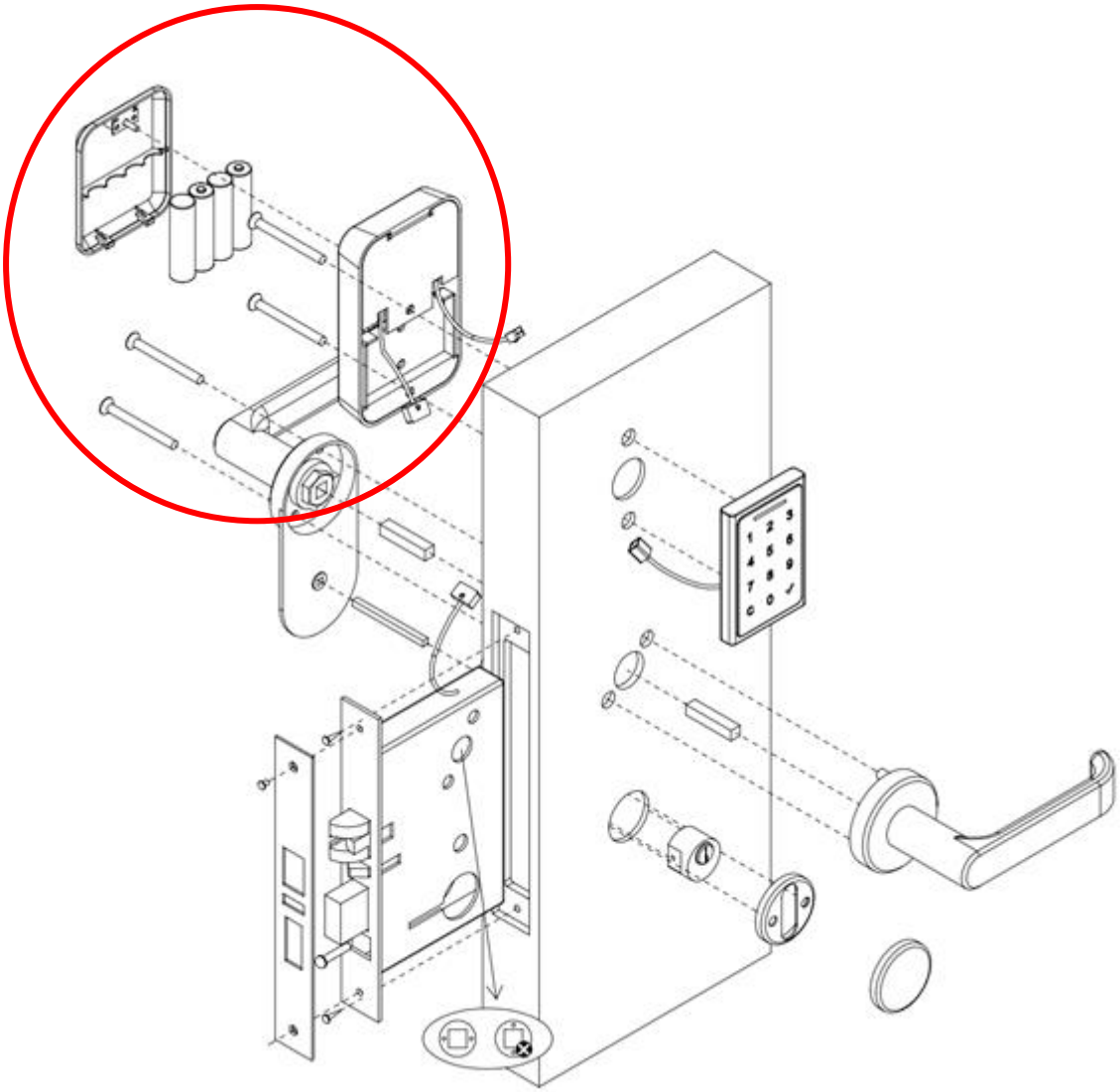

- In Case of battery is off with lock closed status, use mechanical key to open the door and change the battery.

CAUTION

RISK OF EXPLOSION IF BATTERY IS REPLACED BY AN INCORRECT TYPE.
DISPOSE OF USED BATTERIES ACCORDING TO THE INSTRUCTIONS

4. Specification

Item	Spec
Material	Stainless Steel
Communication	2.4Ghz Wireless(ONLINE COMUNICATION) BLE(MOBILE KEY)
Security	AES128
Door open	Touch-key (PIN, HP200 Only), Mobile Key, RFID CARD, Wireless control
Power Supply	AA*4 6V DC(Alkaline) Battery
RFID	Mifare Classic & Desfire at default, ISO14443 Type A
Indicator	Buzzer, Red/Green LED, E-PAPER (HP200E only)
Dimension	HP100 : 56mm*56mm HP200, HP200E : 58mm * 87mm * 11.5mm (W*H*D)
Operation TEMP	0 ℃ to 50 ℃
Battery life	1.5year(online) 2year(stand alone)
Certification	CE, FCC

5. Indication Instruction

1) Guest Card Open : One time Beep sound / Green LED 0.5sec
2) Successful programming : A melody (Do,Mi,So,Fa) / Green LED 0.5sec
3) Indicate for mistake : Three times Beep sound / Red LED three times.
4) Low voltage : Beep 3 times

ANNEX A Beep & LED Table & Trouble Shooting

No	Lock Status	Sound	LED	Additional Info.
1	Battery Change	So,La,Ti,Do,La	-	
2	Succeed Key Card	Do,Mi,So,Fa	Green 0.5sec	
3	Succeed Setup Card programming	Do,Mi,So,Fa	Green 0.5sec	
4	Succeed registration Smartphone on the Hotel Lock	Do,Mi,So,Fa	Green 0.5sec	
5	Succeed Clearance Card	Do,Mi,So,Fa	Green 0.5sec	
6	Succeed Debug Card	Do,Mi,So,Fa	Green 0.5sec	
7	Succeed Staff Card	Do,Mi,So,Fa	Green 0.5sec	
8	Low Battery Detect	Beep 3 times	-	
9	Succeed Emergency Card	Do,Mi,So,Fa	Green 0.5sec	
10	Succeed Maintenance Card	Do,Mi,So,Fa	Green 0.5sec	
11	Succeed Cancel Card	Do,Mi,So,Fa	Green 0.5sec	
12	Succeed Blocking Card	Do,Mi,So,Fa	Green 0.5sec	
13	Succeed Lock Info Card	Do,Mi,So,Fa	Green 0.5sec	Total 2,000 events
14	Succeed Privacy Card	Do,Mi,So,Fa	Green 0.5sec	
15	Over events of memory from Lock Info Card	Beep 4 times	-	
16	Succeed collecting 100 events Audit Trail	Beep 1 time	-	Total capability is 2,000 events, Total 20 times Beep sound.

No	Lock Status	Sound	LED	Additional Info.
17	Succeed collecting all, Audit Trail Card	Do,Mi,So,Fa	-	
18	Open the door using Guest Card	Beep 1 time	Green 0.5sec	
19	RTC Date Time setting failure	So,La,Ti,Do,La	-	
20	Automatically setting default date & time (2010.Jan.01), due to RTC error	So,La,Ti,Do,La	-	
21	Latch Open failure	Do,Re 3 times	-	
22	Latch Open failure and retrial is failed again	Do,Re 3 times	-	
23	Sensing Latch Push from opening inside of the door	-	Green 0.5sec	
24	Sensing forcibly Open	Do,Re 1.5sec	-	
25	State of Read Error any cards	Beep 3 times	NG 3회	
26	State of Write Error any cards			
27	State of any other error of all cards			
28	State of valid expired for all cards			
29	Mismatched Guest Card room No.			
30	Unauthorized/inaccessible Staff Card's room No.			
31	Unauthorized/inaccessible Staff Card's where the lock has been set for Privacy			
32	Undefined type of card reading error			
33	In case of scanning blocked card			
34	Deadbolt Rejection error			
35	Multiple trial "One Time Card"			
36	State of registration for smartphone. (Open from inside and scan Guest card two times)	Beep 2 times	Repeat "Green"/"Red	
37	Connect Front and Body of the lock	Beep 2 times	-	

6 Regulatory Statement

The revised User Manual does not contain the FCC required warning statements.

a. Rule Part 15.19(a)(3): This device complies with part 15 of the FCC Rules. Operation is subject to the following two conditions: (1) This device may not cause harmful interference, and (2) this device must accept any interference received, including interference that may cause undesired operation.

b. Rule Part 15.21: The users manual or instruction manual for an intentional or unintentional radiator shall caution the user that changes or modifications not expressly approved by the party responsible for compliance could void the user's authority to operate the equipment.

Note: This equipment has been tested and found to comply with the limits for a Class B digital

NOTE: This equipment has been tested and found to comply with the limits for a Class B digital device, pursuant to part 15 of the FCC Rules. These limits are designed to provide reasonable protection against harmful interference in a residential installation. This equipment generates, uses and can radiate radio frequency energy and, if not installed and used in accordance with the instructions, may cause harmful interference to radio communications. However, there is no guarantee that interference will not occur in a particular installation. If this equipment does cause harmful interference to radio or television reception, which can be determined by turning the equipment off and on, the user is encouraged to try to correct the interference by one or more of the following measures:

• Reorient or relocate the receiving antenna.
• Increase the separation between the equipment and receiver.
• Connect the equipment into an outlet on a circuit different from that to which the receiver is connected.
• Consult the dealer or an experienced radio/TV technician for help

Responsible Party –
Cardcom
Address: 1301 S. Beach Blvd. Ste-P La Habra, CA 90631
Tel.: 562-943-6300
E-mail: passtech@esmartlock.com