A21W IP Phone User Manual

Version: 2.0

2015-12-21

Content

Contact ATCOM **4**
Overview of ATCOM **4**
1. Overview of A21W **5**
1.1 Interfaces 5
1.2 Hardware 5
1.3 Software 5
1.4 Network 6
1.5 Management and Maintenance 6
1.6 Protocol 6
1.7 Compliant and Authenticated Standard 6
1.8 Packing List 7
1.9 Installation 7
2. Keypad of IP Phone **14**
2.1 Describe of the buttons and Screen 14
2.2 Line keys LED 15
2.3 Status Indicator 16
2.4 Programmable keys LED 16
2.3 Describe of the LCD Screen Icons 16
3. Basic functions and operations **17**
3.1 Answer the calls 17
3.2 Make Call 17
3.3 Pre- dial 18
3.4 Hang up the phone 18
3.5 Call Transfer 19
3.6 Voicemail 19
3.7 Mute calls 19
3.8 3-Way Conference Call 19
3.9 Call History 20
3.10 Default Password 20
3.11 Check the Phone's IP address 21
3.12 Dial Plan 21
4. Web settings **23**
4.1 System status 23
4.2 Network 24
4.2.1 Basic 24
4.2.2 Advance 24
4.3 SIP Setting 26
4.4 Account 28
4.5 Phone Setting 32
4.5.1 Preference 32
4.5.2 Features 34
4.5.3 Voice 35
4.5.4 Ring 36
4.5.5 Tone 36
4.5.6 Line key 37

4.6 Update 37
4.6.1 Manual Update 37
4.6.2 Update/Auto Provision 38
4.6.3 Reset & Reboot 39
4.7 Phone Book 39
4.7.1 Phonebook 39
4.7.2 LDAP 40
4.7.3 Remote Phonebook 40
4.8 Call Log 41
5. Wi-Fi 42
6. FAQ & Trouble Shooting 43
6.1 How to make a factory reset 43
6.2 Upgrade firmware under safe mode 43
6.3 How to make direct IP call 43
7. Trouble Shooting 44
7.1 The phone can’t register successfully 44
7.2 The phone can’t obtain IP address 44
7.3 Only one part can hear the voice during the call 44
8. Abbreviations 45

Contact ATCOM

Overview of ATCOM

ATCOM is the leading VoIP hardware manufacturer in global market. We have been keeping innovating with customer's needs oriented , working with partners to establish a total solution for SMB VoIP with IP phone , IP PBX and Asterisk cards

With over 10 years' experience of R&D , manufacturing and service in network and VoIP filed ; mission of creating the biggest value for IP terminals , we commit ourselves in supplying the competitive IP phone and other terminals for IP PBX , softswitch , IMS , NGN providers and carriers; supplying the competitive total VoIP solution for SMB market. We keep improving the customer's experience and creating the bigger value with our reliable products. Until now, our VoIP products have been available in 100+ countries and used by millions of end users.

Contact Sales

Address	Area C, A2F , Block 3 ,Huangguan Technology Park , #21 Tairan 9th Rd, Chegongmiao , Futian District , Shenzhen China
Tel	+ (86) 755-83018618-8806
Fax	+ (86) 755-83018319
E-mail	sales@atcomemail.com

Contact Technical Support

Tel	+ (86) 755-83018618-8008
E-mail	Support@atcomemail.com

Website Address: http://www.atcom.cn/

Download Center: http://www.atcom.cn/download.html

1. Overview of A21W

A21W

Type	POE	Power adapter	Wi-Fi
A21W	Yes	Optional accessory	Yes

1.1 Interfaces

- Power input: DC 5V, 1000mA or POE
- LAN: RJ45 port
- PC: RJ45 port
- Headset jack 1 : RJ9 port
- Handset jack 1 : RJ9 port

1.2 Hardware

- LCD: 132×58
- CPU: 400MHz Dual Core
- LED indicator: 1 Status Light, 2 line indicators

1.3 Software

- Sip 2.0 (RFC3261) and other related SIP RFCs

- 2 SIP lines
- STUN
- Jitter Buffer, VAD,CNG
- G711A/u, G722, G726-16, G726-24, G726-32, G726-40, G729 , Lin16-16, iLBC
- Echo Cancellation
- SIP Domain name, Authentication
- DTMF（inband, RFC2833, info）
- Call transfer, Call forward, 3-way conference, Call hold, Call back
- DND(Do Not Disturb), Auto answer, Blacklists, Block Call-ID, Block Anonymous call, Dial plan, IP call
- Phone book with 1000 white records and 100 black records, 200 answered calls, 200 missed calls, 200 dialed calls
- Update via HTTP, FTP, TFTP, PNP,HTTPS
- Syslog
- SNTP
- WEB access with different login level
- Multi-language: English, Chinese, Farsi, French, German, Hebrew, Italian, Portuguese, Russian, Spanish, Turkish
- Soft button: soft button * 3
- Redundancy SIP server
- BLF

1.4 Network

- LAN/PC：Support bridge mode
- Support VLAN（LAN VLAN and PC VLAN）
- Support L2TP VPN
- LAN support Primary and Secondary DNS
- LAN support DHCP Client
- Support QoS

1.5 Management and Maintenance

- Support safe mode and firmware updating under safe mode
- Support different level user management
- Configuration via web , keyboard
- Support multi-language
- Auto provision (Firmware and configuration file)
- Support system log and call log

1.6 Protocol

- IEEE 802.3 /802.3 u 10 Base T / 100Base TX
- DHCP: Dynamic Host Configuration Protocol
- SIP RFC3261, RFC3262, RFC3263, RFC3264, RFC3265, RFC2543, RFC3489, RFC3842, RFC3515, RFC2976, RFC3428, RFC2327, RFC2782, RFC1889
- TCP/IP: Transfer Control Protocol/Internet Protocol
- RTP: Real-time Transport Protocol
- RTCP:RTP Control Protocol
- DNS: Domain Name Server
- TFTP: Trivial File Transfer Protocol
- HTTP:Hypertext Transfer Protocol
- FTP:File Transfer Protocol

1.7 Compliant and Authenticated Standard

- CE: AGC01180140201E2，AGC01180140202E2

- Comply with ROHS in EU
- Comply with ROHS in China
-
- Operation temperature: lower than 60° C
- Storage temperature: lower than 60° C
- Humidity: 10 to 90% no dew

1.8 Packing List

Model	Phone	Handset	Handset line	Stand bracket	Ethernet Cable	User Manual CD
A21W	1	1	1	1	1pcs 1.5m	1

Note: Power adapter (Input: AC 100~240V, 50/60Hz; Output: 5V, 1000mA;)

1.9 Installation

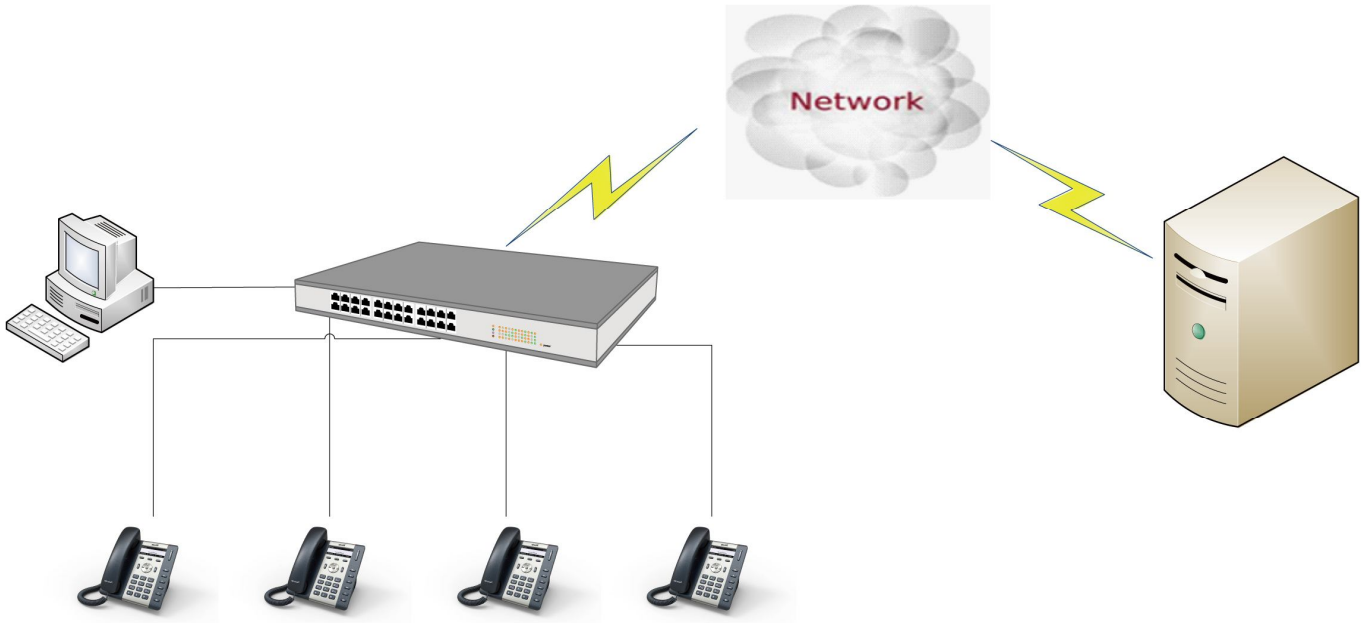

Connect LAN port to PC with Ethernet cable, or connect A21W to a switch/router which is in the same network as your PC. It uses DHCP mode by default, and you can review its current IP address by pressing key on idle state. To access the web interface, you can input the IP address in IE browser. E.G. The IP address of your A21W is 192.168.1.100, you can input 192.168.1.100 and press enter key on your browser to access its webpage. There are two login level:

User

Admin

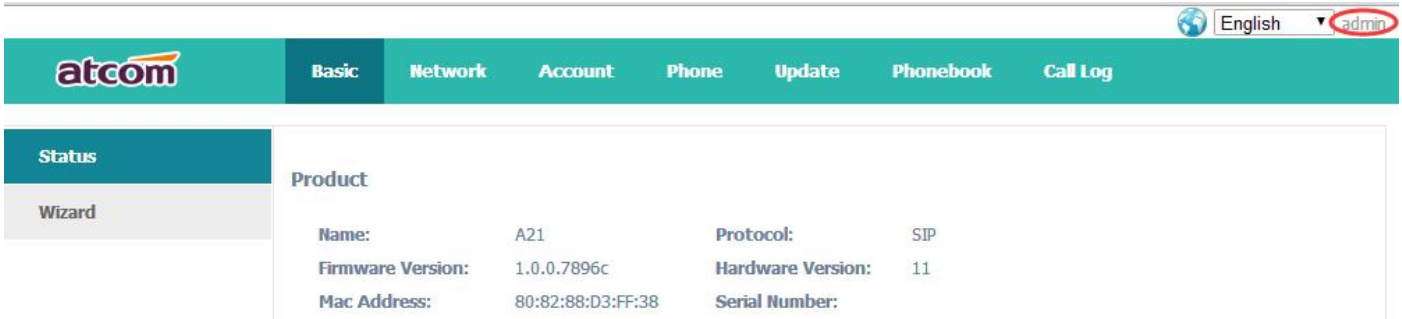

No password is set for those two accounts with factory settings. You can click admin button on the right corner of the webpage to switch from the user to admin mode. To set the password for user and admin login you can firstly login as admin and enter the Network--->Advance page as following.

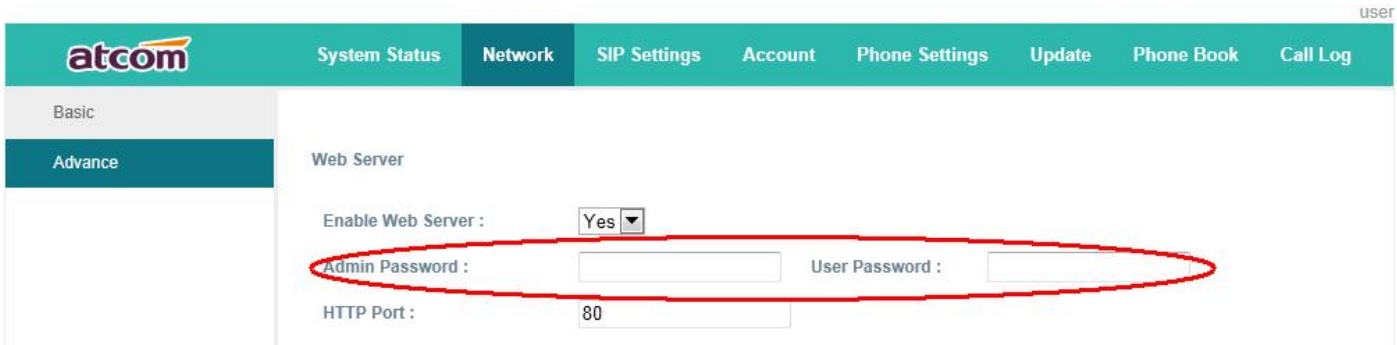

Installation instruction

1. Desktop installation

A. Put the bottom side of the IP phone upside and press one-side joints of stand bracket into the slot, please refer the picture as below:

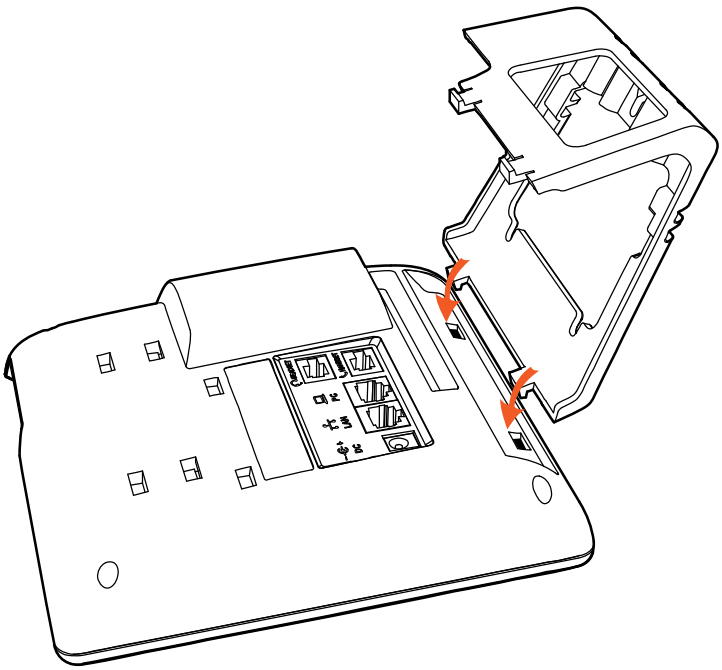

B. Press the other side joints into the slot according to the direction of the arrow

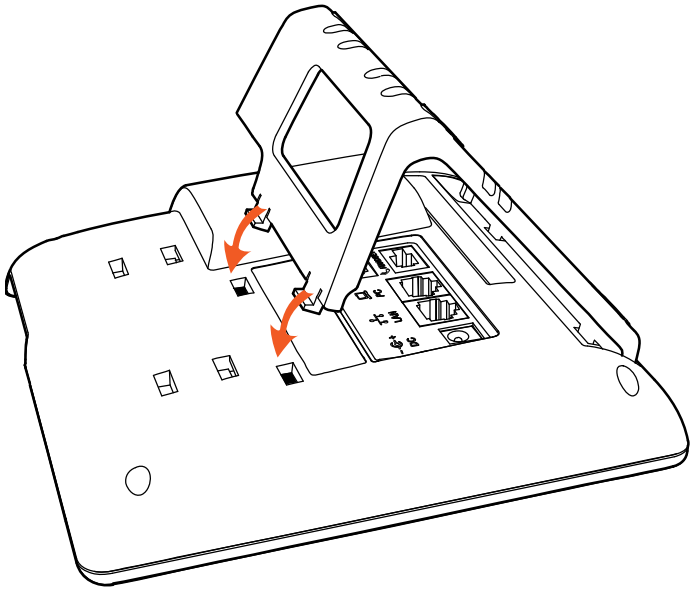

C. It is the right picture after fixing the stand bracket below:

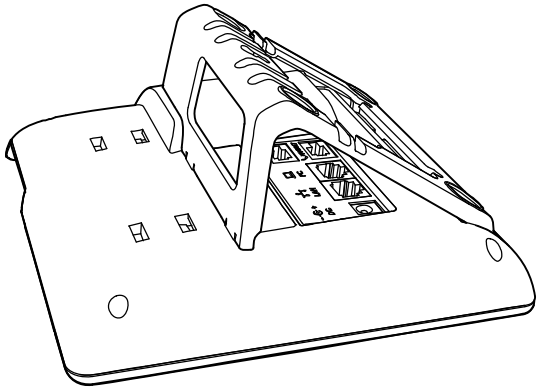

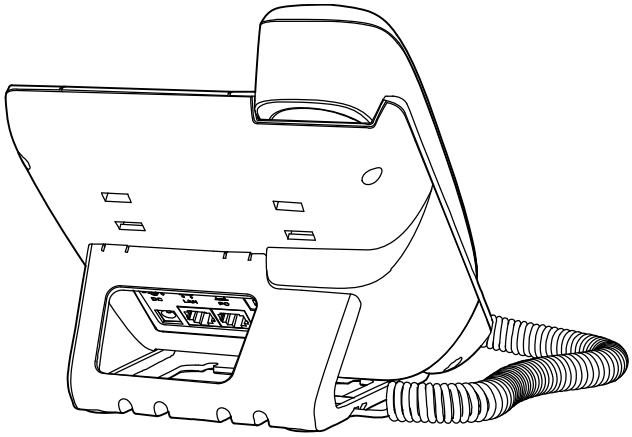

D. Disassemble the stand bracket:

Push the spring joint of stand and pull the stand according to the direction of the arrow. When the joints are pulled out of the slot, you can take off the stand bracket.

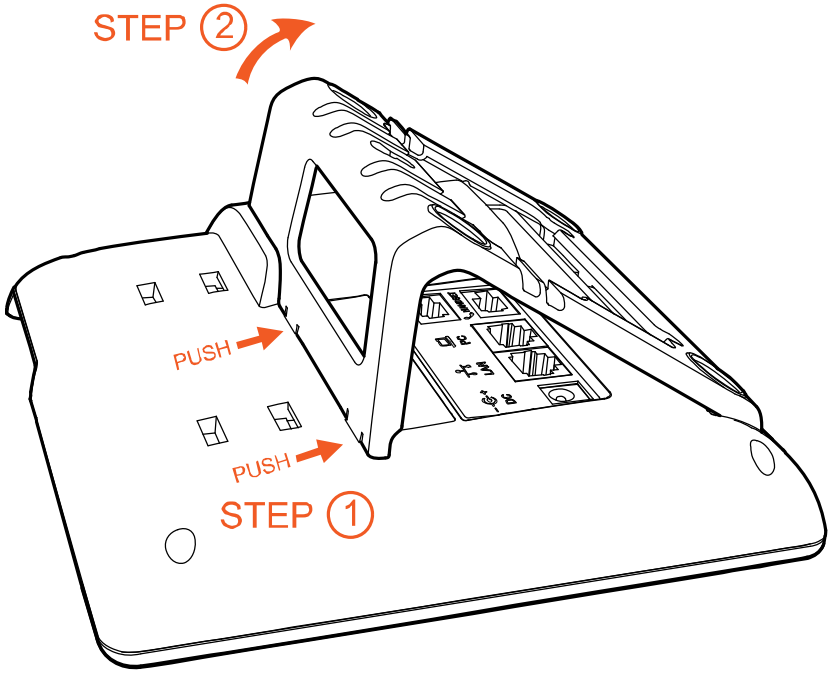

2. Wall-hung Installation

A. Put the bottom side of the IP phone upside and press one-side joints of wall-hung stand bracket into the slot, please refer the picture as below:

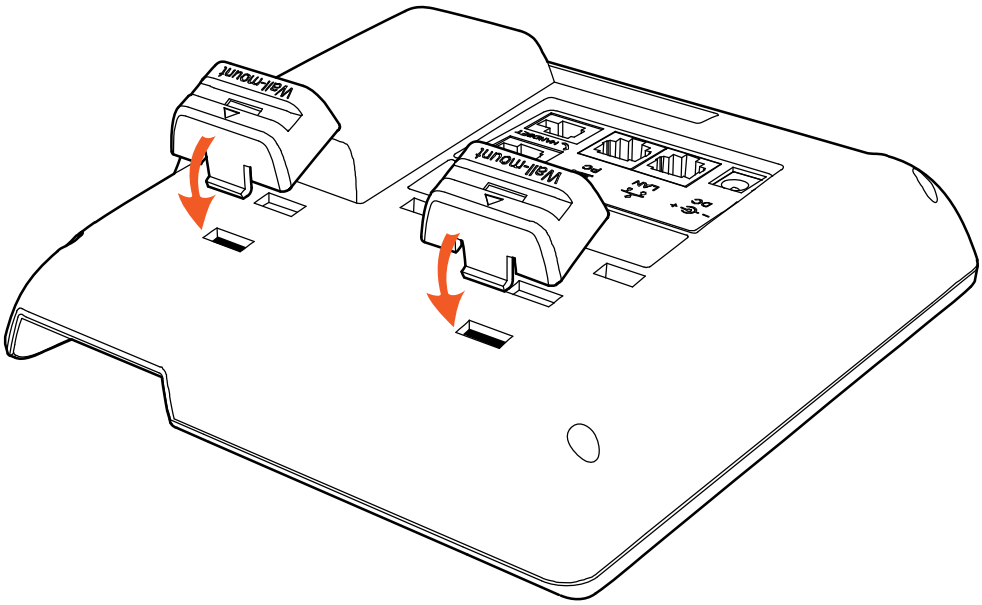

B. Press the other side joints into the slot according to the direction of the arrow

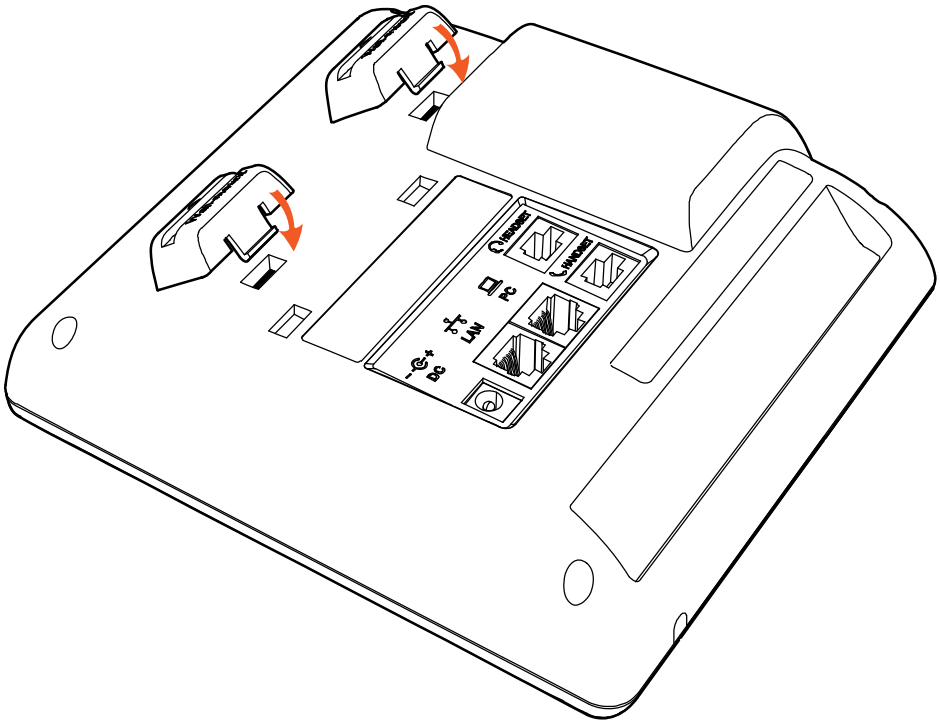

C. After install the wall-hung stand bracket, press one-side joints of stand bracket into the slot, please refer the picture as below:

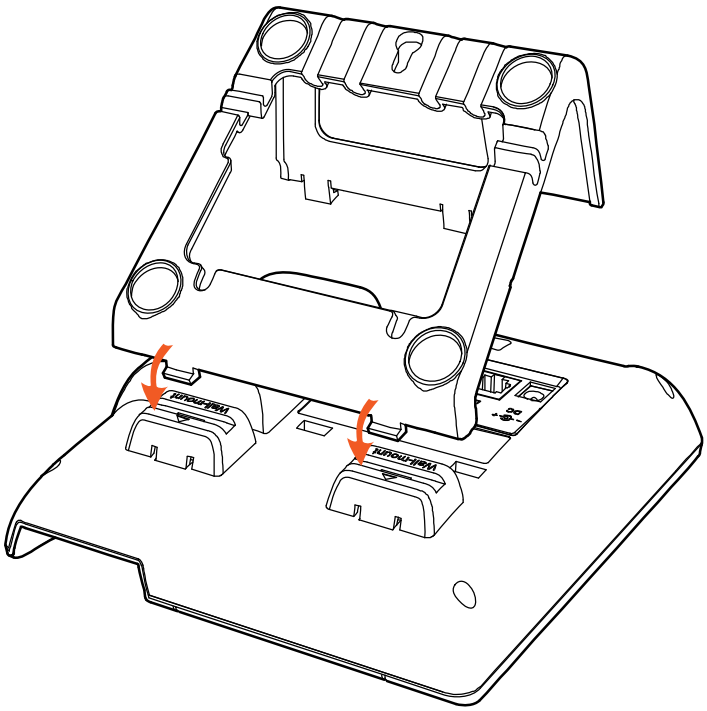

D. Press the other side joints into the slot according to the direction of the arrow

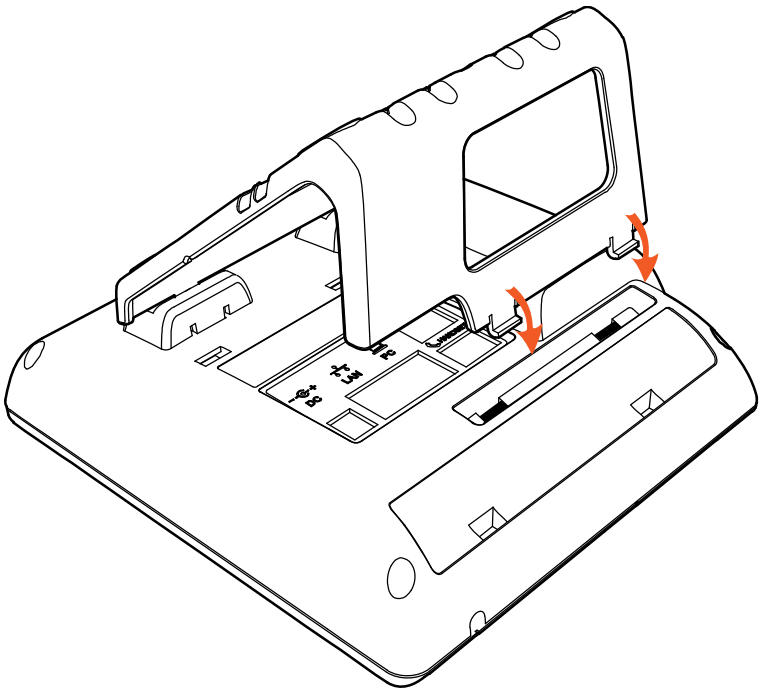

E. Knock in nails or screws on the wall according to the proportion of the distance between the hanging holes as below:

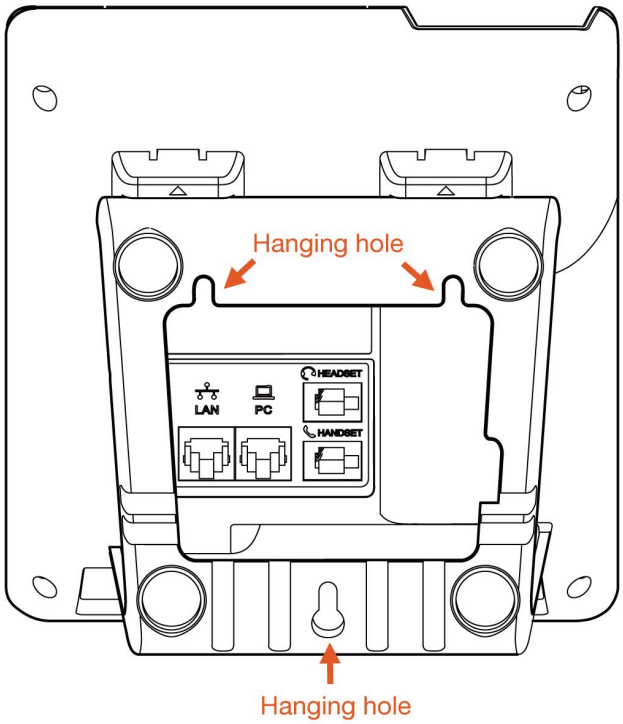

F. It is the right picture after fixing the stand bracket below:

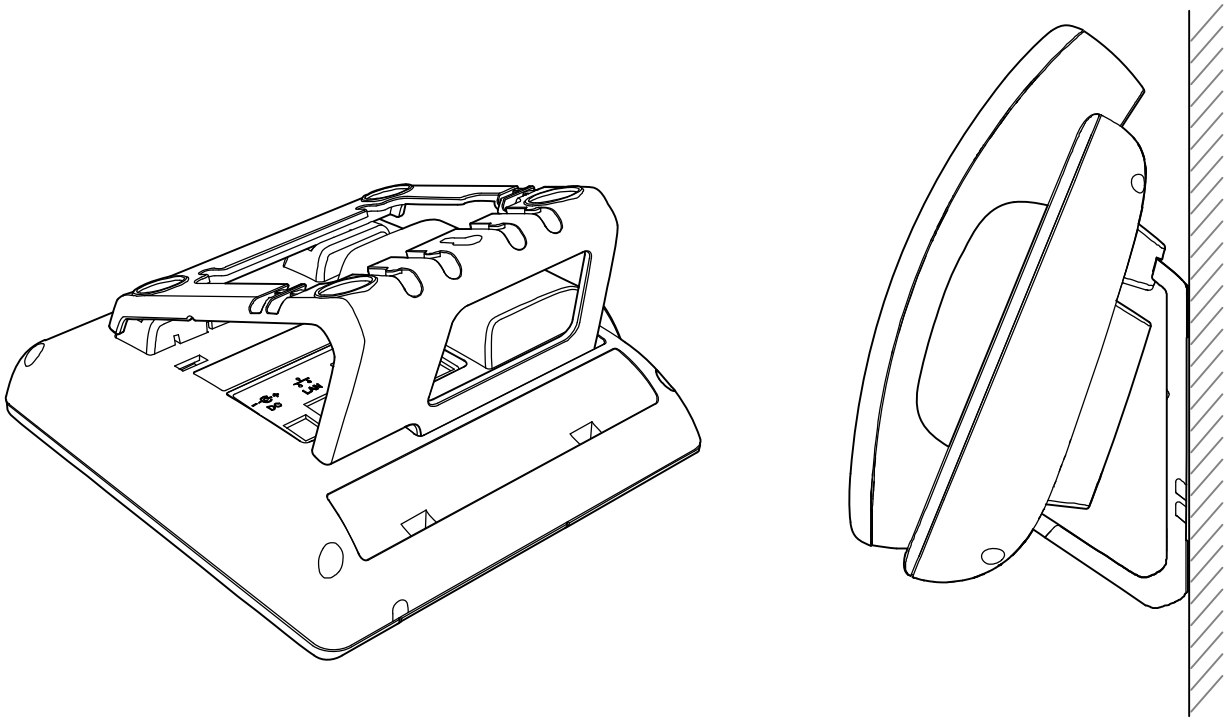

G. Disassemble the stand bracket:

Push the spring joint of stand and pull the stand according to the direction of the arrow. According to the direction of the arrow:

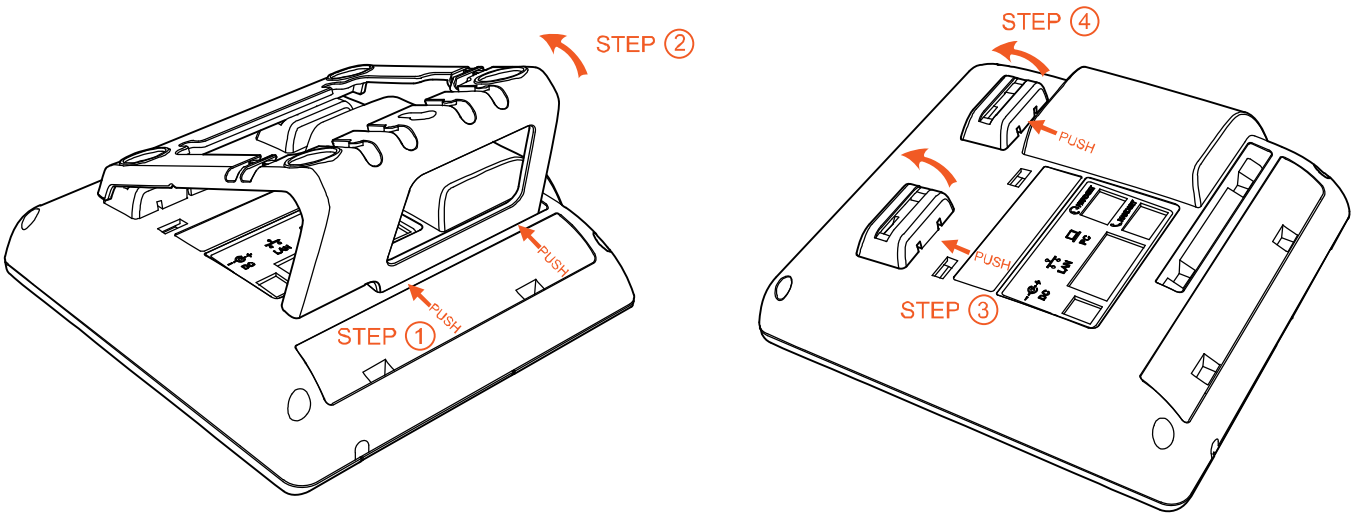

2. Keypad of IP Phone

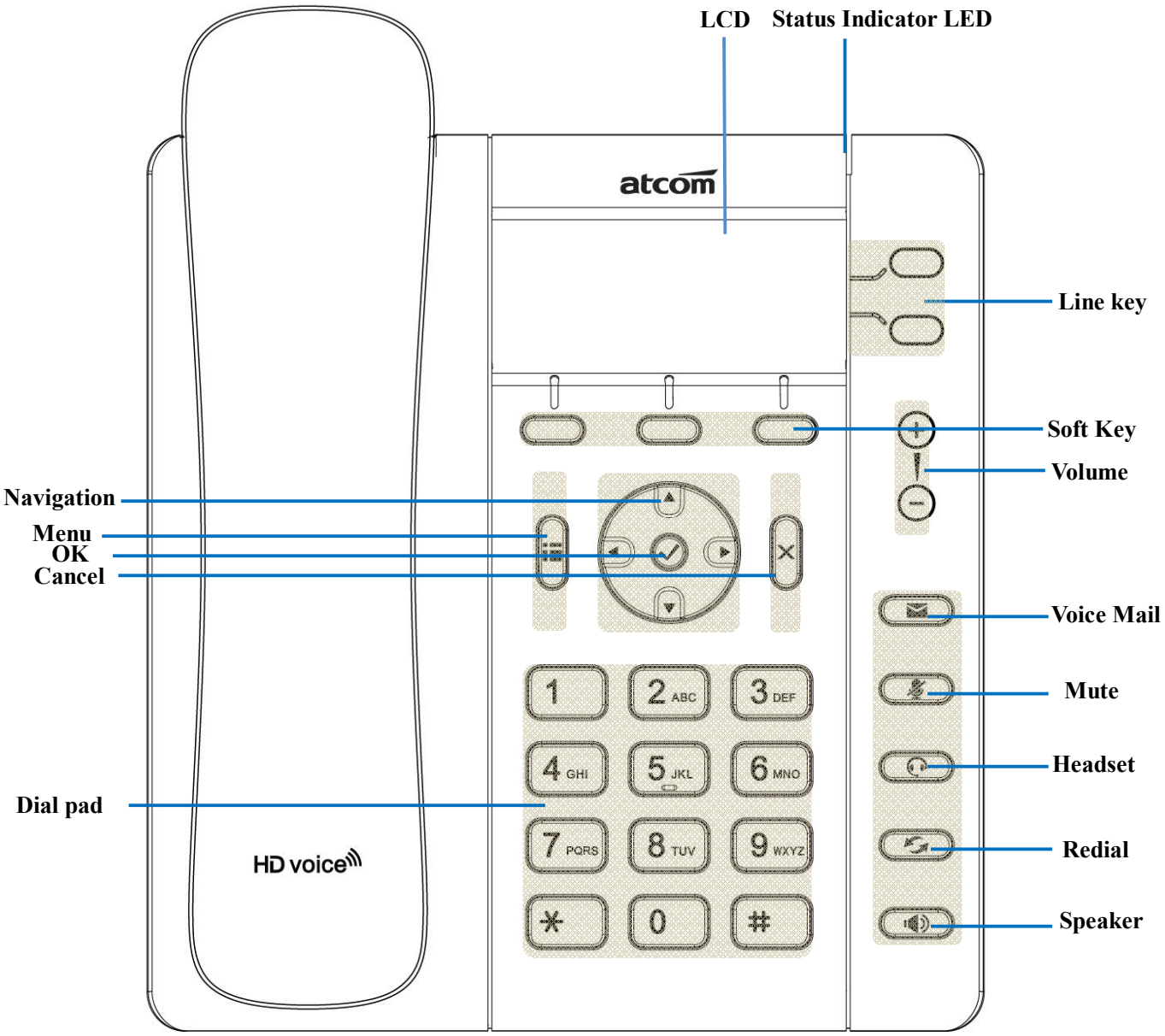

2.1 Describe of the buttons and Screen

Soft Keys	Press to select a function which displayed at the soft key zone of screen Display all optional functions at the last line of LCD screen.
Status Indicator LED	Indicates the phone's status, ➢ If the phone is being started ,the LED is on ➢ If the phone is standby, the LED is off ➢ If there is income calling, the LED will blink at 120ms on, 120ms off.

	➢ If there is a new message, the LED will blink at 600ms on, 600ms off.
LCD Screen	All information such as date, time, phone number, incoming caller's ID(if available),line/call status, extension numbers and the soft key features are displayed on it.
Line Key	Shows extension number and status.
Dial pad	Entering numbers or characters.
Navigation keys	Allows users to navigate (left, right, up, down). Press ▼ can enter "Directory". Press ▲ can enter "History".
⊕ ⊖	Adjust the volume (speaker/handset/headset/ring). Volume level will be displayed on LCD when pressing volume key.
✓	Confirm users' operation and show status when A21W is idle.
✕	Cancel users' operation.
☰	Enter menu settings.
🔊	Pick up and hung up under the speaker mode.
🎤	Mute the mic in a conversation by pressing the Mute button; this prevents the person on the active call from hearing what you or someone else in the room is saying. To un-mute, press the Mute button again.
🎧	Pick up and hung up under headset mode.
✉	Check the Voicemail status.
↻	Redial the last dialed number

2.2 Line keys LED

LED Status	Description
Off	The line is idle or disabled for register
Blink quickly in green	The line has incoming call
Green	The line is talking
Blink quickly in red	The line is held

2.3 Status Indicator

LED Status	Description
On	A21W is being started
Off	A21W is standby
Blink in red at 120ms on, 120ms off	There is incoming call

2.4 Programmable keys LED

LED Status	Description
Off	The monitored account is unregistered
Green	The monitored account is idle
Red	The monitored account is talking
Fast blink in red	The monitored account is ringing

When powering on, all LEDs will be lighted once.

When there is an incoming call, the corresponding line LED and status LED will be blinking.

2.3 Describe of the LCD Screen Icons

Icon	Description
	The extension is registered
	The extension is unregistered
	There is a new voice mail
	There is an incoming call
	The call is held
	A21W is in speaker mode
	A21W is in handset mode
	A21W is in headset mode
	The call is muted
	Connect to Wi-Fi successfully, ×means failed，and ? means connecting

3. Basic functions and operations

3.1 Answer the calls

When there is an incoming call, phone will remind user with ringing. There are 3 ways to answer the call

A. Answer by handset

Pick up the handset and talk with the caller. If you want to hang up, just put back the handset. When you are talking with the handset and want to switch to speaker mode or headset mode, please press key or key, then put down the handset.

B. Answer by speaker

Press key and talk with callers by built-in Micro-phone and Speaker. If you want to hang up, please press key again. Switch calling or talking into handset mode by lifting the handset under speaker mode. Press key will switch calling or talking into headset mode.

C. Answer by headset

Keep your microphone connected with the RJ9 headset jack, when there is an incoming call, press key and talk with the caller. If you want to hang up, please press key again. Pressing key can change calling or talking into speaker mode, and lifting the handset switches to handset mode.

3.2 Make Call

A. Use the handset

Pickup the handset and input a phone number. Press soft key "Send" to dial the number. When you hear the tones of "du~~du~~" and the phone number your dialed is being displayed on the LCD, the phone at the side of being called should be ringing. If the called party answers this calling, the call is established and the calling timer is started immediately.

B. Use the speaker

Press key and input a phone number. Press soft key "Send" to dial the number. When caller hear the tones of "du~~du~~" and the phone number your dialed is being displayed on the LCD, the phone at the side of being called should be ringing. If the called party answers this calling, the call is established and the calling timer is started immediately.

C. Use the headset

Press Key and input a phone number. Press soft key "Send" to dial the number. When caller hear the tones of "du~~du~~" and the phone number your dialed is being displayed on the

LCD, the phone at the side of being called should be ringing. If the called party answers this calling, the call is established and the calling timer is started immediately.

D. Dial from phone book

1. Press key and input the keypad password 123 to enter the menu and choose “Directory” option. Press "Select" soft key and then find the contact person by navigation keys. When the certain contact person is highlighted, press "Dial" or just pick up the handset to call this number.
2. Pick up the handset, press "Directory" soft key, then select the contact person and press "Dial" soft key.
3. Pick up the handset, press and enter “Directory”, then select the contact person and press “Dial” soft key.

E. Dial from call history

1. Press key and input the keypad password 123 to enter the menu and choose “History” option, then enter sub-directory “Dialed Calls”, “Received Calls” or ” Missed Calls” to select one of call history entry, and press "Dial" soft key or pick up handset to call this number.
2. Pickup the handset, press "History” soft key, then select one of call history entry, and press "Dial" soft key to call this number.
3. Pickup the handset, press and enter “Call History” ,then select one of call history entry, and press "Dial" soft key to call this number.

3.3 Pre- dial

It’s a method to dial a phone number immediacy at standby mode.

A、Dial-up the phone number at standby mode

B、Press soft key "Dial" to send out the number

Multiple line dial-up

A21W supports 2 SIP lines. That means user can register on2 different sip accounts simultaneity. User is able to choose line1 or line2 by pressing corresponding line key. Line1 is the priority line.

A21W maximum supports 4 concurrent calls. When there is an incoming call to another line, LCD will show the incoming telephone number and line LED will be blinking in green. User is able to press the corresponding line key on which you’re talking then press “Answer” to receive the incoming call from another line.

3.4 Hang up the phone

1. Handset hang up

Put back the handset at handset mode, the current calling will be hung up.

2. Speaker hang up

Press key at speaker model, the current calling will be hung up.

3. Headset Hang up

Press key at headset model, the current calling will be hung up.

4. Hang up one line call

Press the hook to hang up the current calling when 2 calls happened simultaneously.

3.5 Call Transfer

1. Attended call transfer

The attended transfer allows user to call a third-party before transferring the calling.

While on calling, press the "Transfer" soft key to hold the current call and phone the third party. Then dial the target number you want to transfer to on the activated line and press “Send” soft key to call that number. After the target party answers the call, press "Transfer" soft key again to complete the transfer.

2. Blind call transfer

The blind transfer allows user to transfer a call without speaking to the third party. On the user side, the call will be ended as soon as the target phone number is dialed.
Operating steps: Press “More” soft key to get more option, then press “Bxfer” soft key, input the transfer target number and press “Send” soft key.

3.6 Voicemail

A21W has a key for entering voicemail box. Press key to enter the menu to configure voicemail number if never configure it previously. Otherwise, the voicemail number will be called after press it. If you want to modify it after configured it, please go to the Account webpage to modify the voicemail number.

3.7 Mute calls

The input audio will be not transmitted to peer phone after pressing key, and the phone will be muted even switched among different modes of speaker, handset and headset. To un-mute, just press key again.

3.8 3-Way Conference Call

To initiate a conference call:
Press “More” soft key on calling to get more options, then press “Conf” soft key to start a conference call. Enter the phone number of the third party and press “Send” soft key to send it out.

1. After the third party answers the call, pressing "Conf" key again to establish the 3-way conference.
2. 3-way conference initiator can press "Exit" soft key to quit from the conference and leave the other two parties still in the conversation.
3. If the initiator hangs up the call or press the “End Conf” soft key, the conference will be ended and the calling between the other two parties will be hung up.

3.9 Call History

A21W supports 200 missed calls list, 200 incoming calls list and 200 dialed calls list. When the storage is full, the old record will be erased by the new one.

Press "History" soft key or key when A21W is standby, all the incoming(->), outgoing(<-) and missed calls(!) will be listed. There is other ways to check them:

A. Missed call

1. Press key.
2. Press key and key to select “Call History” then press “Select” soft key.
3. Press key and key to select “Missed Calls” then press “Select” soft key.
4. Press key and key to browse the missed call record. If there is no record, the LCD display will be indicated “List is Empty”.

B. Answered call

1. Press key .
2. Press key and key to choose “Call History” and then press “Select” soft key.
3. Press key and key to choose “Answered Calls” and then press “Select” soft key.
4. Press key and key to browse the answered call records. If there is no record, the LCD display will be indicated “List is Empty”.

C. Dialed call

1) Press key.
2) Press key and key to select "Call History" and then press “Select” soft key.
3) Press key and key to select “Dialed Calls” and then press “OK” soft key.
4) Press key and key to browse the dialed call records. If there is no record, the LCD display will be indicated “List is Empty”.

3.10 Default Password

Password is needed to access menu and web.

The default password for accessing menu is 123.

There are 2 modes to access web: User mode and Admin mode. All the parameters can be visible at Admin mode while part of them can be visible at User mode.

- User Mode
  Username：user no default Password
- Admin Mode：
  Username：admin no default Password

3.11 Check the Phone's IP address

Press key, then the status of the phone will be displayed on the screen and you will see the current IP address of the phone.

3.12 Dial Plan

Dial plan defines the rule of dial. The syntax of dial plan for A21W is closely similar as the corresponding syntax specified by MGCP and MEGACO.

Dial plan is stipulated by the below configurable parameters:

- Interdigit Long Timer——refer to Interdigit long timer for more detail description
- Interdigit Short Timer——refer to Interdigit short timer for more detail description
- Dial Plan

Dial plan contains a series of digit sequences, separated by the '|' character. The collection of sequences is enclosed in parentheses '(' and ')'.

Default: (*xx.|xxxxxxxxxxxx.)

When user dials a series of digits, A21W will response in below way:

- No candidate sequences matched, the number will be rejected and "call ended" will be displayed on the screen. For instance, if the default dial plan only supports digits, any '*' character or letters input will be rejected.
- More than one candidate sequences matched, A21W will wait for more digits input.
- When input timeout occurs, A21W will dial the digits input already.
- When input '#' character, A21W will dial the input digits immediately.

Digit Sequence Syntax:

'x': Matches any one numeric digit ('0' ... '9')

'[]': Numeric ranges are allowed within '[]'. For example, [389] means '3' or '8' or '9', [3-6] means '3' or '4' or '5' or '6' , [235-8*] means '2' or '3' or '5' or '6' or '7' or '8' or '*'.

'.' : Any element can be repeated zero or more times by appending a '.' character. For example, 01. matches 01,011,0111,01111,...,011111111...etc.

'<>': subsequence substitution. For example, '<8:1650>xxxxxxx' would match '85551212' and the first digit '8' will be replaced by '1650' and '16505551212' will be dialed.

',': An "outside line" dial tone can be generated within a sequence by appending a ',' character between digits. Thus, the sequence "9, 1xxxxxxxxxx" sounds an "outside line" dial tone after the user presses '9', until the '1' is pressed.

'!': A sequence can be barred (rejected) by placing a '!' character at the end of the sequence. For example, "137xxxxxxxx!" will forbid numbers which have 11 digits and start by 137 to be dialed.

Example:

(xxxxxxx|[*#]xxxx|9,1xxxxxxxxxx|00xxx!) contains 4 subsequences:

1. Allow to dial numbers with 7 digits
2. Allow to dial numbers with 4 digits and start by '*' or '#'
3. Allow to play an "outside line" dial tone after pressing '9' and dial numbers with 11 digits and start by 1
4. Forbid to dial numbers with 5 digits and start by 00

4. Web settings

Input the IP address in the web browser and press 'Enter' key to access A21W's user webpage. Click "admin" which is on the right top corner to enter administrator webpage.

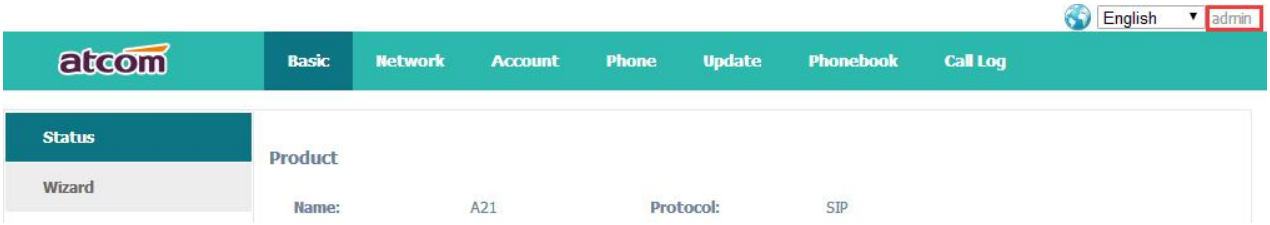

4.1 System status

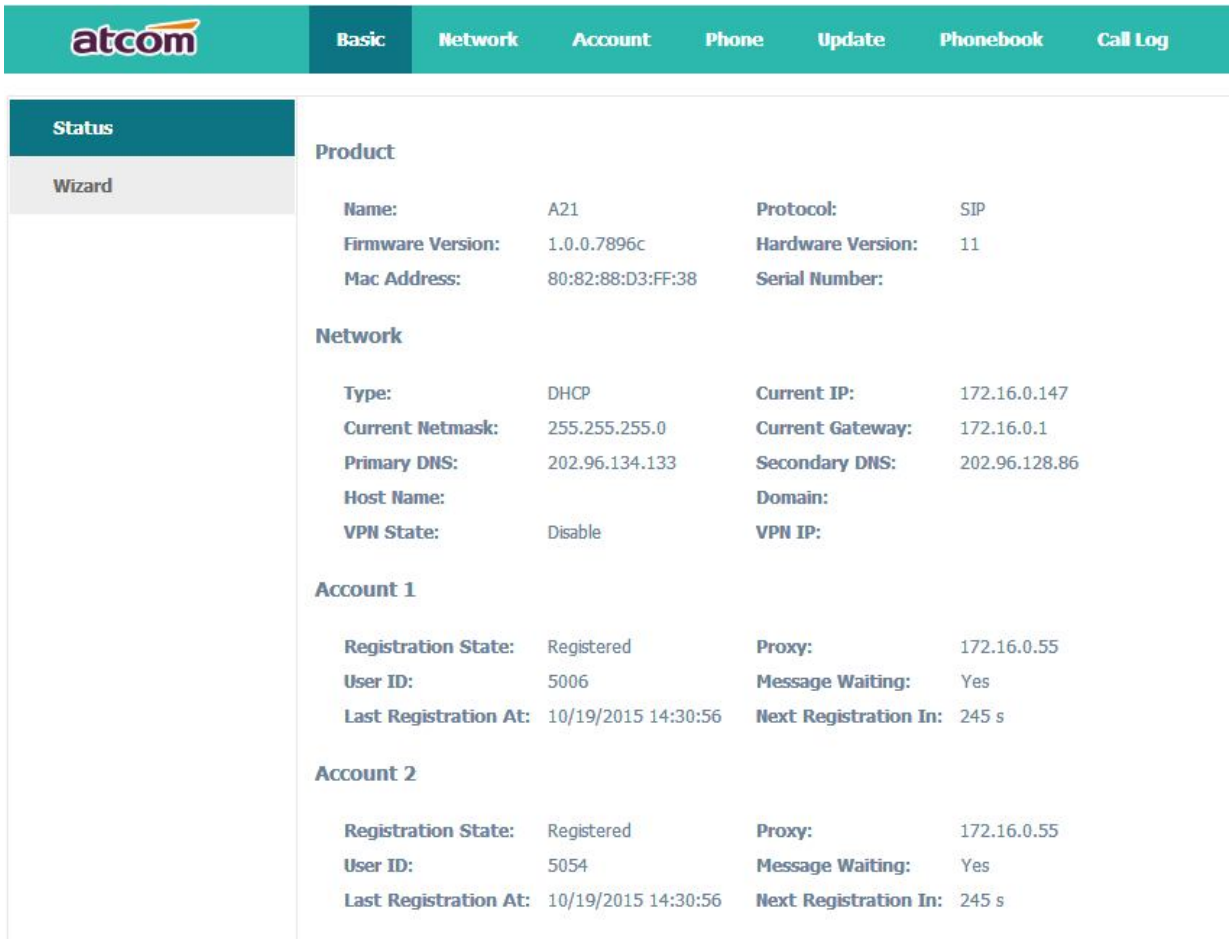

This page shows the IP phone's system status.

1. **Product Information** shows the product name, protocol, software and hardware version, Mac address and serial number.

2. **Network Information** shows the network connection type, IP address, netmask, gateway, DNS, host name, domain and VPN information.

3. **Account Information** account 1/2 shows registration state, proxy, user ID, message waiting on or off , the last and next registration time.

4.2 Network

4.2.1 Basic

There are 2 ways to connect to the internet: DHCP and Static , please choose one according to your own situation.

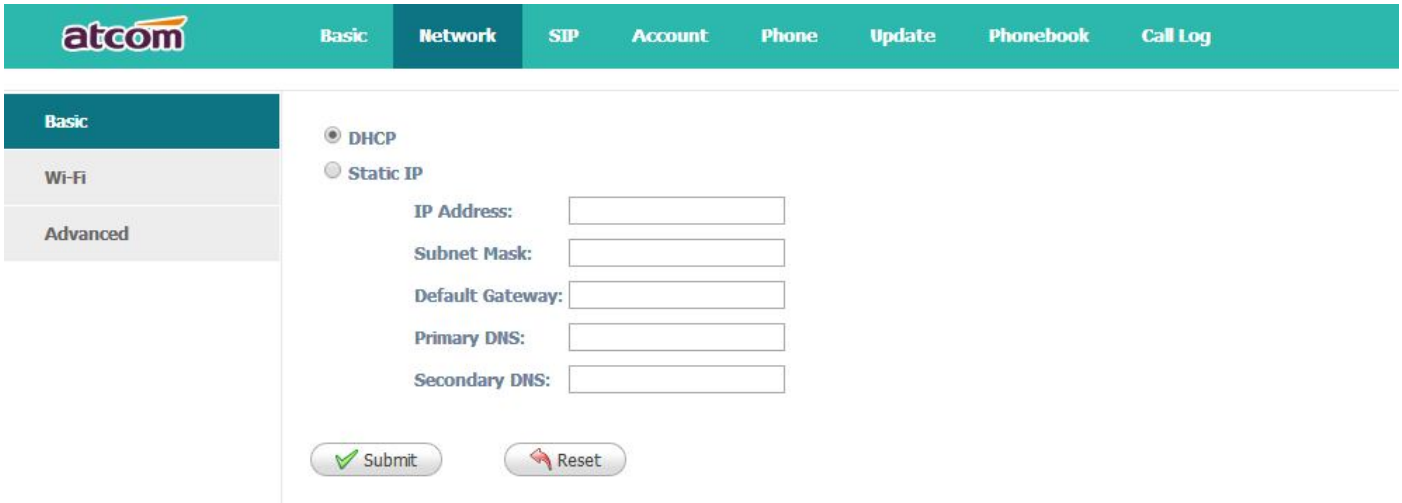

Network mode: DHCP ,Static IP

1. DHCP

   Obtain automatically dynamic IP from DHCP server.

2. Static IP

   a) IP Address: set IP address

   b) Subnet Mask：set netmask

   c) Default Gateway：set gateway

   d) Primary DNS：set primary DNS server

   e) Secondary DNS：set secondary DNS server

Press 'Submit' button after finishing setting and all the settings info will be saved and taken effect after A21W reboots.

4.2.2 Advance

➢ **Web Server**

Web Server

Enable Web Server :	Yes		
Admin Password :		User Password :	
HTTP Port :	80		

- ✓ Enable Web Server: Enable or disable web access. If choose "no", you're not able to access A21W's webpage.
- ✓ Admin password: Set password for admin webpage access. Input 'http://ip-address/index.asp' in the web browser to access admin's login webpage after setting the admin password, then input username(admin) and password to access the admin's webpage.
- ✓ User password: Set password for user webpage access. Input 'http://ip-address/user.asp' in the web browser to access user's login webpage after setting the user password, then input username(user) and password to access the user's webpage.
- ✓ HTTP port: set port for HTTP access (defaults to 80)
  For example, A21W's IP is 192.168.1.223
  HTTP port was set as 100, you have to type "http://192.168.1.223:100" in web browser to enter A21W's webpage.

➢ VPN

VPN

VPN Enable :	No	VPN Type :	L2TP Tunnel
Server Address :			
User Name :		Password :	

1. VPN Enable: Select "Yes" or "No" to enable or disable VPN
2. VPN Type: Only support L2TP VPN
3. Server address: VPN server address
4. Username: VPN account's username
5. Password: VPN account's password

After apply, the phone will be reboot. The VPN IP address will be shown on the System Status webpage.

➢ VLAN

VLAN

You should receive the tagging values of a virtual LAN from your provider. Wrong settings will require factory reset.

LAN VLAN Enable:	No	PC VLAN Enable:	No
LAN Identifier(1~4094):	1	PC Identifier(1~4094):	1
LAN Priority:	0	PC Priority:	0

1. VLAN Enable: Select "Yes" or "No" to enable or disable VLAN
2. LAN VLAN Identifier(1..4094) : Assign VLAN ID for voice stream, range from 1 to 4094
3. LAN VLAN Priority: range from 0 to 7, 7 is the highest priority.
4. PC VLAN Identifier(1..4094) : Assign VLAN ID for data stream, range from 1 to 4094
5. PC VLAN Priority: range from 0 to 7, 7 is the highest priority.

➢ Port Link

Choose the network type and port link of LAN/PC

1. LAN Port Link: Auto negotiate, full duplex 10Mbps, full duplex 100Mbps, half duplex 10Mbps, half duplex 100Mbps.
2. PC Port Link: Auto negotiate, full duplex 10Mbps, full duplex 100Mbps, half duplex 10Mbps, half duplex 100Mbps.

➢ Qos

QoS: Quality of service

1. SIP Qos: Quality of service for SIP (Diffserv)
2. Voice Qos: Quality of service for RTP (Diffserv)

➢ Syslog

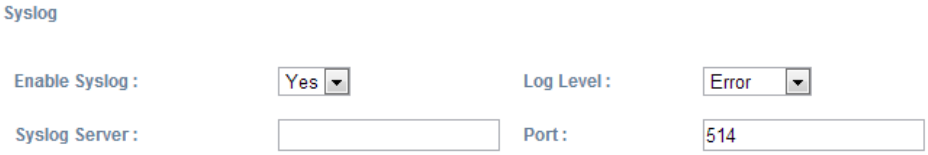

1. Enable Syslog: Select "Yes" or "No" to enable or disable syslog.
2. Log level: None, Alert, Critical, Error, Warning, Notice, Info, Debug. The debug level is the most detailed.
3. Syslog Server: Syslog Server address.
4. Port: Syslog server port, defaults to 514.

4.3 SIP Setting

➢ Sip Timer Values

Sip Timer Values

Sip T1 :	0.5	Sip T2 :	4
Sip T4 :	5		
Reg Retry Intvl :	8	Sub Retry Intvl :	10

1. Sip T1: RFC 3261 T1 value (RTT). Range: 0 – 64 sec, defaults to 0.5
2. Sip T2: RFC 3261 T2 value (Maximum retransmit interval for non-INVITE requests and INVITE responses). Range: 0 – 64 sec, defaults to 4
3. Sip T4: RFC 3261 T4 value (Maximum duration a message will remain in the network). Range: 0 – 64 sec, defaults to 5
4. Reg Retry Intvl: Interval to wait before the phone retries registration again after encountering a failure condition during last registration. Range: 0 –65535, defaults to 8
5. Sub Retry Intvl: Interval to wait before the phone retries subscriber again after encountering a failure condition during last subscriber. Range: 0 –65535, defaults to 10

➢ RTP Parameters

RTP Parameters

RTP Port Min :	16384	RTP Port Max :	16482
RTP Packet Size(ms) :	10		

1. RTP Port Min: Minimum port number for RTP transmission and reception. Range: 1–65535, defaults to 16384
2. RTP Port Max: Maximum port number for RTP transmission and reception. <RTP Port Max> should be at least 2 larger than <RTP port Min>.Range: 1–65535, defaults to 16482
3. RTP Packet Size(ms): Packet size in milliseconds, which can be 10ms, 20ms, 30ms, 40ms, 60ms

➢ SDP Payload Types

SDP Payload Types

G711a Codec Name:	PCMA	G711u Codec Name:	PCMU
G729ab Codec Name:	G729	G722 Codec Name:	G722
AVT Dynamic Payload:	101	AVT Codec Name:	telephone-event
iLBC Dynamic Payload:	98	iLBC Codec Name:	iLBC
G726-16 Dynamic Payload:	108	G726-16 Codec Name:	G726-16
G726-24 Dynamic Payload:	109	G726-24 Codec Name:	G726-24
G726-32 Dynamic Payload:	110	G726-32 Codec Name:	G726-32
G726-40 Dynamic Payload:	111	G726-40 Codec Name:	G726-40
Lin16 Dynamic Payload:	107	Lin16 Codec Name:	L16

1. G711a Codec Name---G711a codec name used in SDP, defaults to PCMA
2. G711u Codec Name---G711u codec name used in SDP, defaults to PCMU

3. G722 Codec Name---G722 codec name used in SDP, defaults to G722
4. G729ab Codec Name---G729ab codec name used in SDP, defaults to G729
5. AVT Dynamic Payload---AVT dynamic payload type.Defaults to 101
6. AVT Codec Name---AVT codec name used in SDP, defaults to telephone-event
7. iLBC Dynamic Payload---iLBC dynamic payload type. Defaults to 98
8. iLBC Mode---iLBC codec rate, which can be 13.3kBit/s, 15.2kBit/s. Defaults to 13.3kBit/s
9. G726r16 Dynamic Payload ---G726 dynamic payload type. Defaults to 108
10. G726r16 Codec Name---G726 codec name used in SDP, defaults to G726-16
11. G726r24 Dynamic Payload ---G726 dynamic payload type. Defaults to 109
12. G726r24 Codec Name---G726 codec name used in SDP, defaults to G726-24
13. G726r32 Dynamic Payload ---G726 dynamic payload type. Defaults to 110
14. G726r32 Codec Name---G726 codec name used in SDP, defaults to G726r32
15. G726r40 Dynamic Payload ---G726 dynamic payload type. Defaults to 111
16. G726r40 Codec Name---G726 codec name used in SDP, defaults to G726r40
17. Lin16 Dynamic Payload ---Lin16 dynamic payload type, defaults to 102
18. Lin16 Codec Name--- Lin16 codec name used in SDP, defaults to Lin16

➢ **NAT Support Parameters**

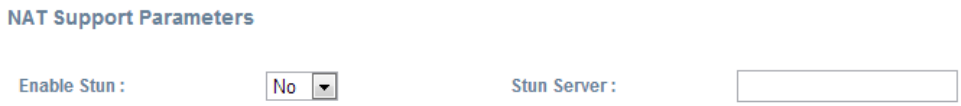

1. Enable Stun: Select “Yes” or “No” to enable or disable using stun to discover NAT mapping.
2. Stun Server: Set stun server, which can be IP address or domain name.

4.4 Account

A21W has 2 line which is enabled to register by default.

➢ **SIP**

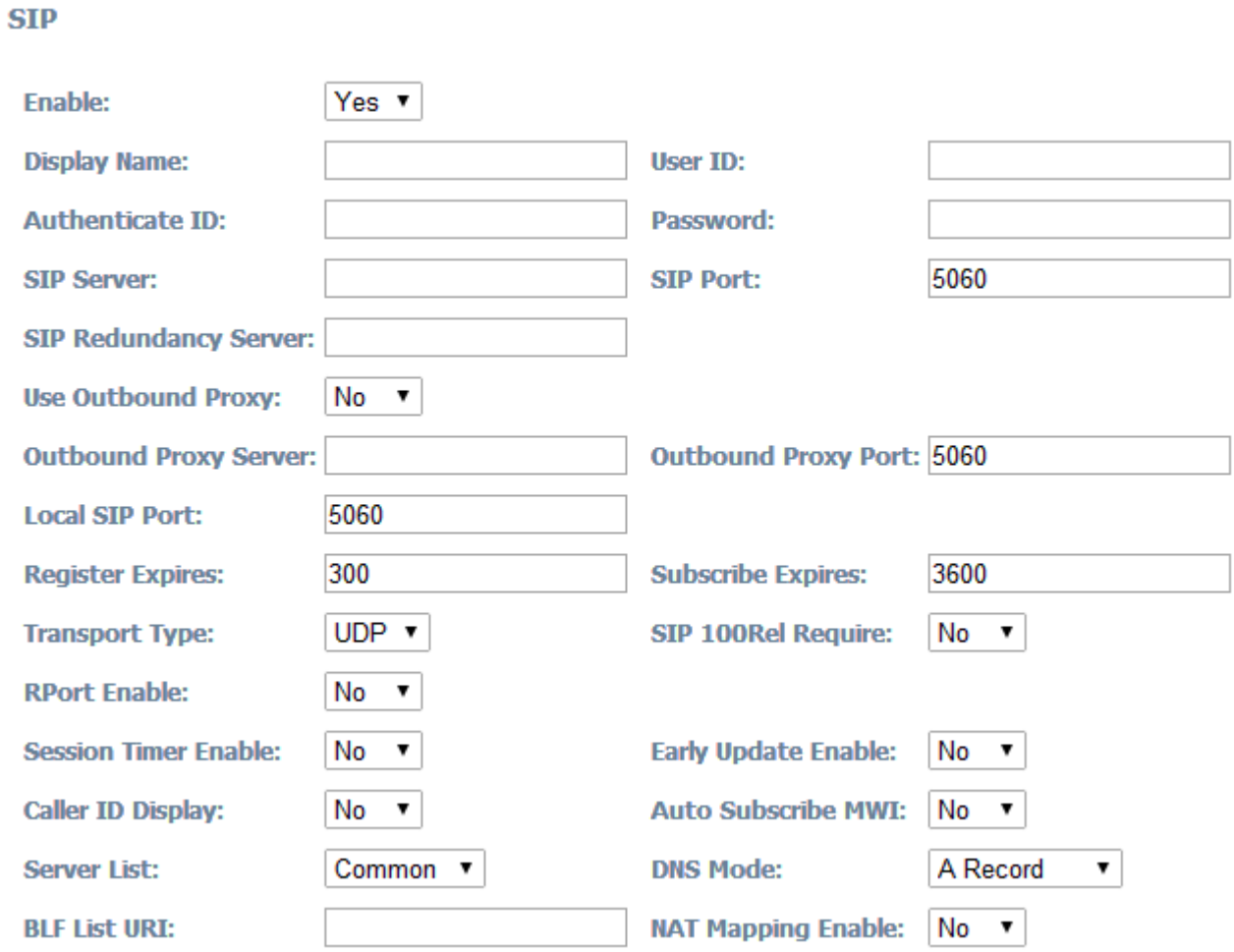

1. Display Name: This name will be displayed on the LCD. It will show the User ID instead if leave Display Name as blank.
2. User ID: Username of sip account.
3. Authenticate ID: Normally is the same as User ID, but blank is acceptable.
4. Password: Password of SIP account.
5. SIP Server: SIP server address, support both IP address and domain name.
6. SIP Port: SIP server port, defaults to 5060.
7. SIP Redundancy Server: SIP redundancy server address.
8. Use Outbound Proxy: Select "Yes" or "No" to enable or disable outbound proxy.
9. Outbound Proxy Server: Set address of Outbound proxy server. All signaling requests will be sent to outbound proxy server firstly.
10. Outbound Proxy Port: Outbound proxy server port.
11. Local SIP Port: Set the local SIP port.
12. Register Expires: Register expiration time, defaults to 300 seconds.
13. Subscribe Expires: Subscriber expiration time, defaults to 3600 seconds.
14. Transport Type: UDP/TCP/TLS. Defaults to UDP.
15. SIP 100Rel Require: Select "Yes" or "No" to enable or disable 100Rel. If enabled, 100rel

parameters will be added to the SIP request to support PRACK.

16. Rport Enable: Select "Yes" or "No" to enable or disable Rport.
17. Session Timer Enable: Select "Yes" or "No" to enable or disable Session Timer.
18. Early Update Enable: Select "Yes" or "No" to enable or disable Early Update.
19. Caller ID Display: Select "Yes" or "No" to enable or disable Caller ID display
20. AutoSubscribeMWIEnable: Select "Yes" or "No" to enable or disable SubscribeMWI
21. Server List: Choose the server type.
22. DNS Mode: Choose the DNS mode
23. BLF List URI: Set BLF list URI when A21W cooperates with Broadworks (Broadsoft).
24. NAT Mapping Enable: Select "Yes" or "No" to enable or disable NAT Mapping.

- **Codec Configuration**

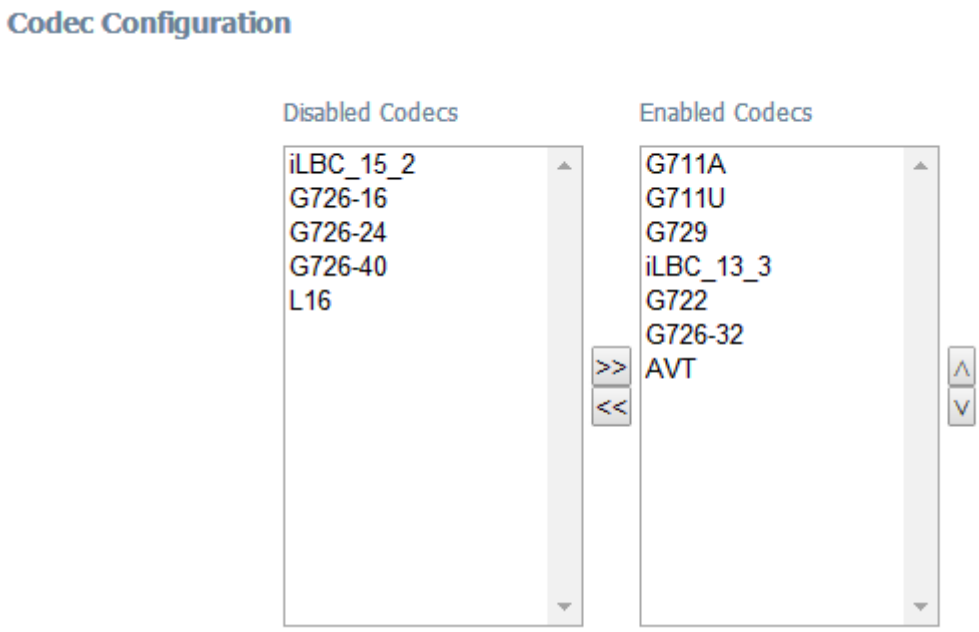

1. Disabled Codecs: The codecs in this frame are disabled, choose one and then click >> to enable the specified codec.
2. Enabled Codecs: The codecs in this frame are enabled, the uppermost codec has the maximum priority. Choose one and then click << to disable the specified codec, click ∧ to promote priority and click ∨ to reduce priority.

- **Call Feature Setting**

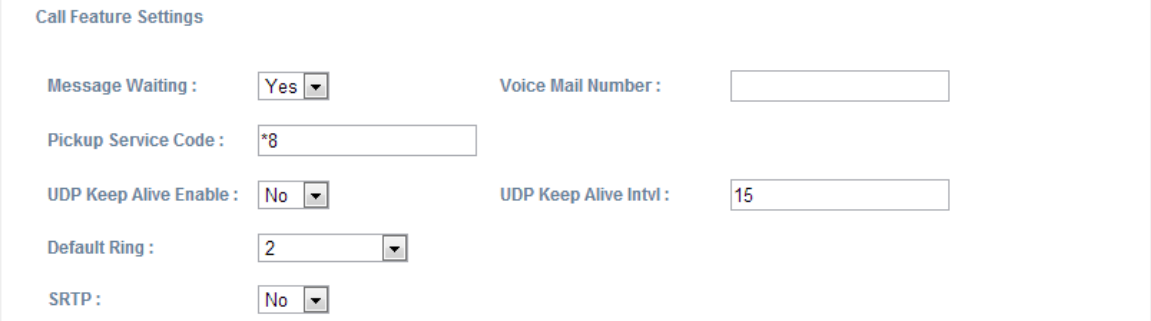

1. Message Waiting: Select "Yes" or "No" to enable or disable indication of new voicemail existed.
2. Voice Mail Number: Set voicemail number.
3. Pickup Service Code: Set Pickup Service Code.
4. UDP Keep Alive Enable: Select "Yes" or "No" to enable or disable UDP keep alive. If enabled, A21W sends UDP packets periodically to keep the server port alive.
5. UDP Keep Alive Intvl: Set interval to send UDP packets.
6. Default Ring: Set default ring tone.
7. SRTP: Select "Yes" or "No" to enable or disable SRTP (Secure Real Time Control Protocol). This feature will be available only when the server supports SRTP.

➢ Dial Plan

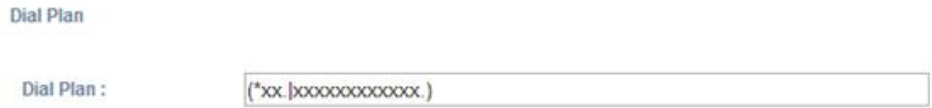

Dial Plan: Configure dial rule for SIP account, please refer to dial plan.

4.5 Phone Setting

4.5.1 Preference

Output Volume (1-8)

Handset Volume:	5	SpeakerPhone Volume:	5
Headset Volume:	5	Ring Volume:	6

Input Gain

Handset Gain:	0	SpeakerPhone Mic Gain:	0
Headset Gain:	0		

LCD

Backlight Level:	5	Backlight Time(Seconds):	10
Contrast:	8		

Phone Lock

Keypad Lock Enable:	Yes	Keypad Lock Type:	Menu Key
Phone Unlock PIN(0~15 Digit):		Phone Lock Time Out(0~3600s):	10
Emergency:	112,911,110		

Control Timer Values(Seconds)

Interdigit Long Timer(1~64):	20	Interdigit Short Timer(1~64):	8
Reorder Delay(0~60):	3	Reorder Time(0~60):	5

- **Output Volume(1~8)**
  1. Handset Volume: Specify handset volume grade
  2. SpeakerPhone Volume: Specify speaker volume grade
  3. Headset Volume: Specify headset volume grade
  4. Ring Volume: Specify ring tone volume grade

- **Input Gain**
  1. Handset Gain: Specify handset gain, the bigger the gain, the louder the other party heard.
  2. SpeakerPhone Mic Volume: Specify speaker gain, the bigger the gain, the louder the other party heard.
  3. Headset Volume: Specify headset gain, the bigger the gain, the louder the other party heard.

- **LCD**
  1. Backlight Level: select the backlight level
  2. Backlight Time(Seconds): select the backlight time
  3. Contrast: select the contrast level

- **Phone Lock**
  1. Keypad Lock Enable: select "Yes" or "No" to enable or disable keypad lock
  2. Keypad Lock Type: Menu key/Function keys/All keys/Answer call only.Defauts to Menu key.
  3. Phone Unlock PIN(0~15 Digit):set the phone unlock PIN.Range: 0~15 digit.
  4. Phone Lock Time Out(0~3600s): set the phone lock time out.Range: 0~3600s
  5. Emergency:set emergency number.Defauts to 112、911 and 110.

- **Control Timer Values(Seconds)**
  1. Interdigit Long Timer: If the numbers or characters input have not finished and do not full matched the dial plan, it will be not dialed out automatically until time out. Range: 0 – 64 sec
  2. Interdigit Short Timer: If the numbers or characters input are full matched the dial plan, it will be dialed out automatically until time out. Range: 0 – 64 sec
  3. Reorder Delay: It means the delay between the remote end hangs up and reorder tone is played. "0" means the reorder tone will be played immediately. Range: 0 – 60 sec
  4. Reorder Time: Set the duration about how long the page of Calling–end displayed

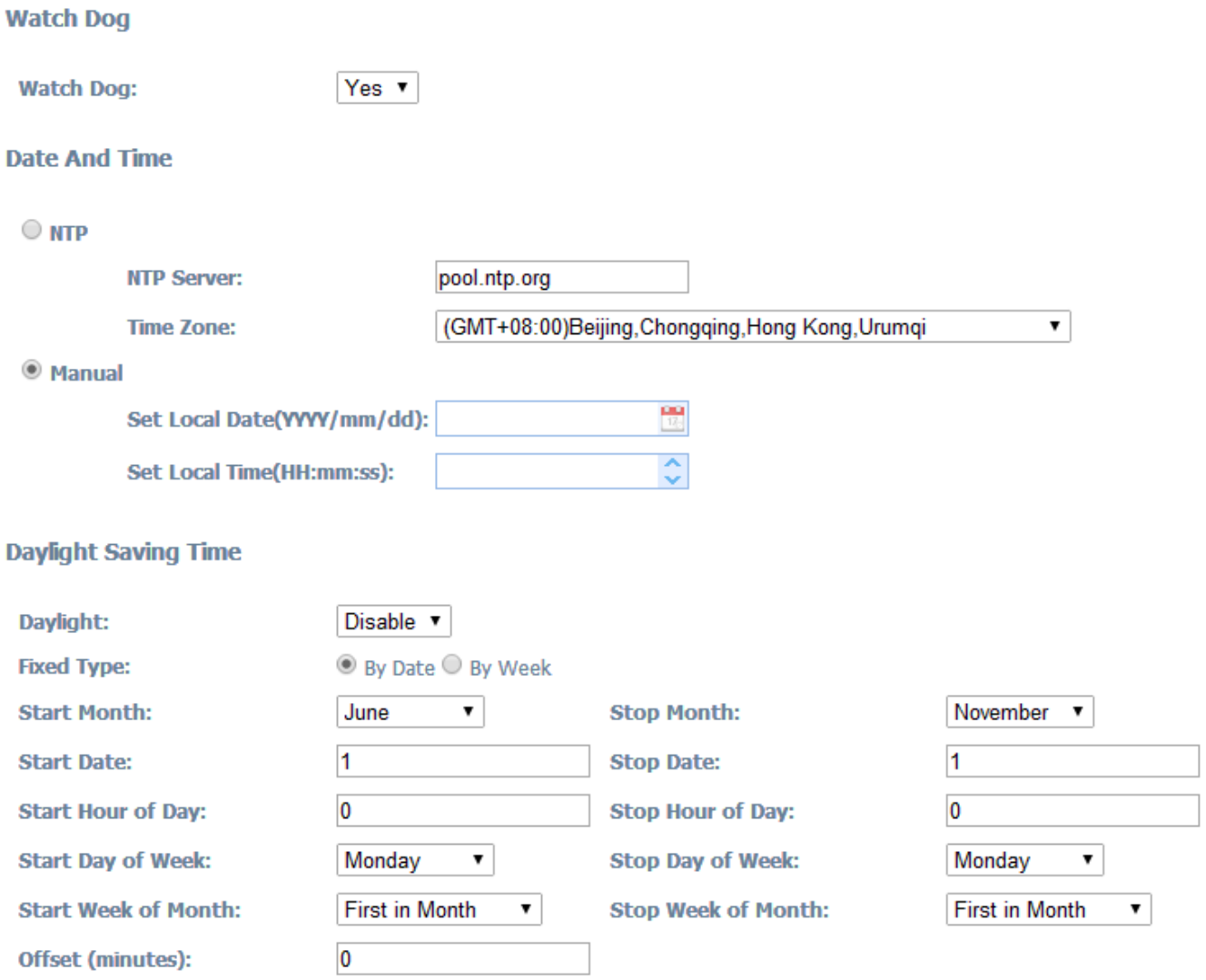

- **Watch Dog**

  Monitor the phone if appears any abnormal phenomena, the default button is enable.

- **Date And Time**

NTP: Network time protocol

1. NTP Server: Set NTP server address, IP address or domain name are both acceptable.
2. Time Zone: Choose your own time zone.

Manual

1. Set Local Date(YYYY/mm/dd): manually set local date or click to choose local date .Format: year/month/day.
2. Set Local Time(HH:mm:ss) : manually set local time or click to adjust local time. Format: hour/minute/second. e.g. 12:00:00.

➢ **Daylight Saving Time**

1. Daylight: A switch to control the status that whether to enable the daylight or not.
2. Fixed Type: Daylight fixed type, only the specified items are configurable.
3. Start Month: The month that the daylight rule begins taking effect.
4. Start Date: The day that the daylight rule begins taking effect.
5. Start Hour of Day: The hour of day that the daylight rule begins taking effect.
6. Start Day of Week: The day of week that the daylight rule begins taking effect.
7. Start Week of Month: The week of month that the daylight rule begins taking effect.
8. Stop Month: The month that the daylight rule stops taking effect.
9. Stop Date: The day that the daylight rule stops taking effect.
10. Stop Hour of Day: The hour of day that the daylight rule stops taking effect.
11. Stop Day of Week: The day of week that the daylight rule stops taking effect.
12. Stop Week of Month: The week of month that the daylight rule stops taking effect.
13. Offset(minutes): The offset time that daylight rule takes effect.

4.5.2 Features

➢ **Call Forward**

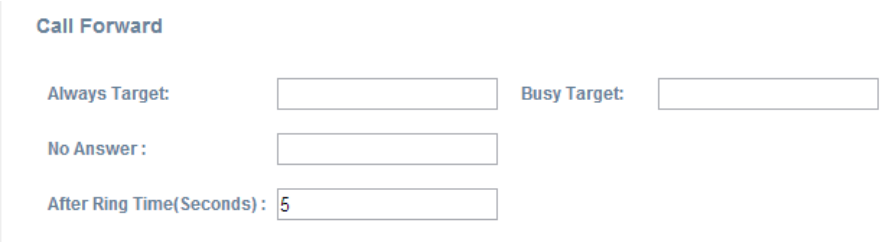

1. Always Target: Every incoming call will be forwarded to this target.
2. Busy Target: The incoming call will be forwarded to this target when A21W is busy.
3. No Answer: The incoming call will be forwarded to this target when there is no answer.
4. After Ring Time (Seconds): After this time out, the incoming call will be forwarded to this target if no answer. Defaults waiting for 5 seconds.
   The priority of Always Target is highest when Always Target, Busy Target and No Answer Target have been set. This means all the incoming call will be forwarded to the Always Target.

➢ **Call Settings**

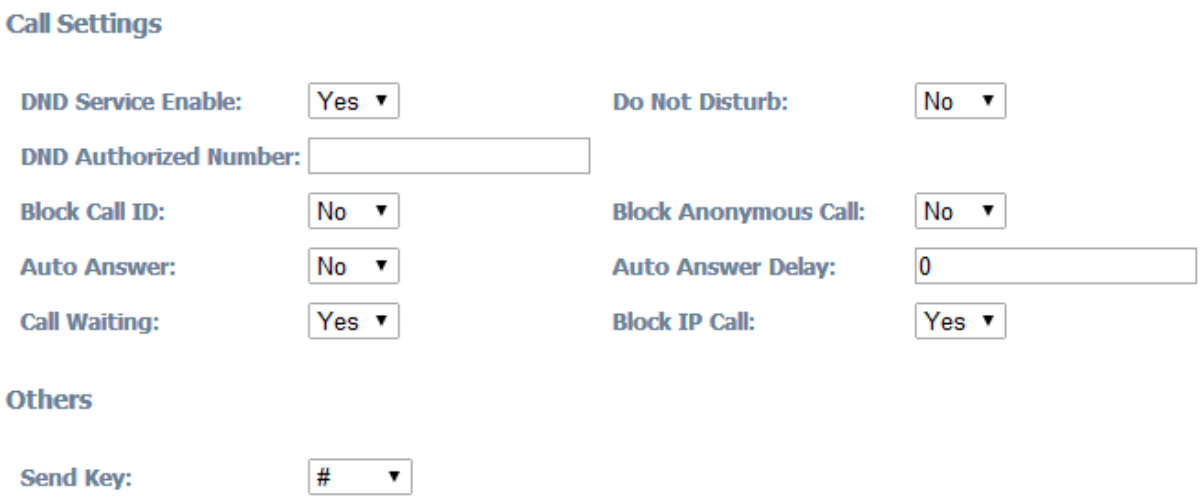

1. DND Service Enable: Select "Yes" or "No" to enable or disable DND service.
2. Do Not Disturb: Select "Yes" or "No" to enable or disable DND (Do Not Disturb).When DND enabled, all the incoming calls will be rejected. At this moment if Always Target or Busy Target was set, all incoming calls will be forwarded to the targets preferentially.
3. DND Authorized Number: Set the DND authorized number.When the DND fuction opens,DND authorized number calls will not be rejected.
4. Block Call ID: Select "Yes" here, Caller ID will be blocked, A21W will call others as anonymous.
5. Block Anonymous Call: Select "Yes" here, all anonymous call will be blocked, A21W will reject all anonymous callers.
6. Auto Answer: Select "Yes" here, A21W will answer all incoming calls by speaker automatically.
7. Auto Answer Delay: Set the auto answer delay.Defauts to 0.
8. Call Waiting: When A21W is on calling, and Call Waiting enabled , any new incoming calls will not be rejected but ringback tone can be heard by the remote end. if Call Waiting disabled, only one conversation will be available even multi-accounts have been registered on A21W .
9. Block IP Call:Select "Yes" or "No" to enable or disable block ip call.
10. Send Key: Define the Send key as "#" key or "*"Key. Press "#" Key or "*"Key follow those phone number you want to dial, then number will be dialed out immediately.

4.5.3 Voice

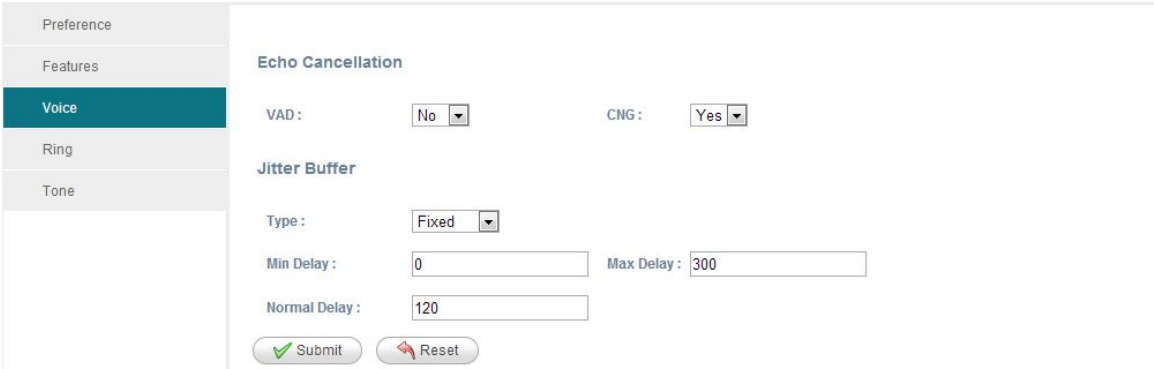

Echo Cancellation

1. VAD: Select "Yes" or "No" to enable or disable VAD (Voice Active Detection). If enable, RTP packets will not be sent when A21W is mute.
2. CNG: Select "Yes" or "No" to enable or disable CNG (Comfort Noise Generator). If enable, comfortable noise will be sent to the remote end to let it perceive the conversation is still active when A21W is mute.

Jitter Buffer

A21W is able to buffer incoming voice packets to minimize out-of-order packet arrival. This process is known as jitter buffer.

1. Type: Choose type of jitter buffer. When choose Fixed, the size of jitter buffer is fixed. When choose Adaptive, the size of jitter buffer is the sum of Minimum Delay and the size of RTP packets.
2. Min Delay: The minimum delay of the jitter buffer.
3. Max Delay: The maximum delay of the jitter buffer.
4. Normal Delay: This is used to set fixed jitter buffer which should be between Min Delay and Max Delay.

4.5.4 Ring

Administer can upload 2 user define ring. The ring file should be wav (8k, 8bit, u-law) and no larger than 200 KBytes.

4.5.5 Tone

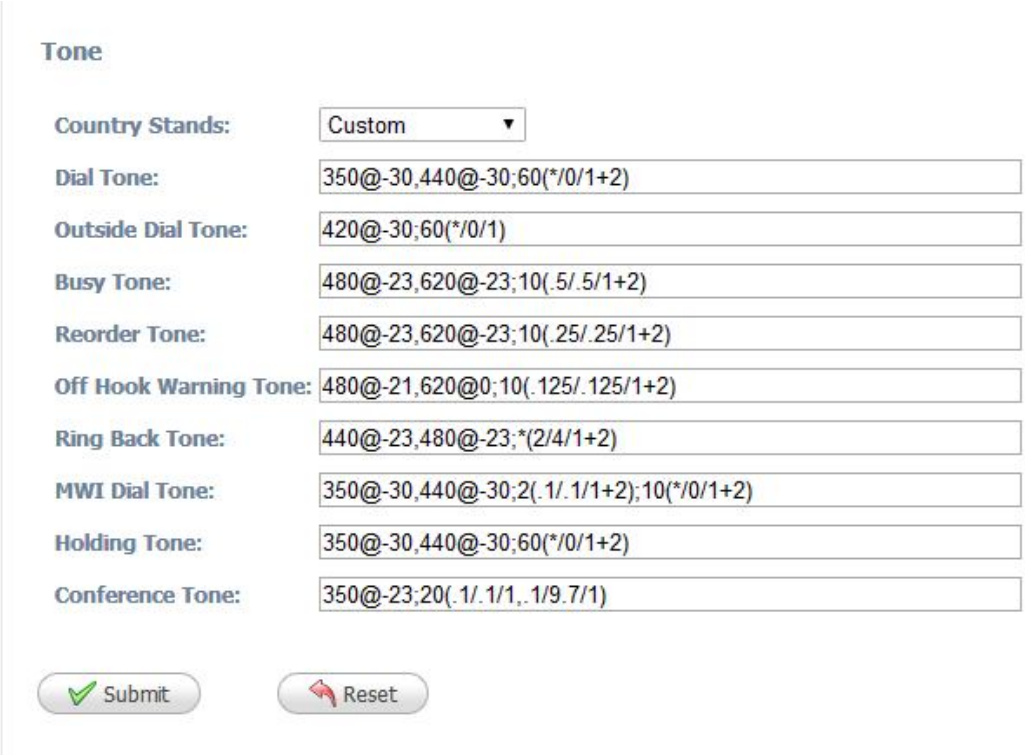

Set the ToneScript for each tone.

For example, MWI Dial Tone: 350@-30,440@-30;2(.1/,1/1=2);10(*/0/1+2)

Frequency1, Frequency2 ;Cadence Section1;Cadence Section2

350@-30: Frequency1 is 350HZ at -19dBm
440@-30: Frequency2 is 440HZ at -19dBm
2(.1/,1/1=2): Cadence Section length is 2s, 0.1s on, 0.1s off, with frequencies 1 and 2
10(*/0/1+2): Cadence Section length is 10s, always on(* means always, 0 means never), with frequencies 1 and 2.

1. Country stands: Select a country standard tone as default.
2. Dial Tone：The prompting audio to remind user to enter a phone number for dialing
3. Outside Dial Tone：The prompting audio to remind user to enter an external phone number (versus an internal extension). This is triggered by a "," character encountered in the dial plan.
4. Busy Tone：The promoting audio when a 486 RSC is received for an outbound call.
5. Reorder Tone：The promoting audio when an outbound call failed or after the remote end hangs up an established call.
6. Off Hook Warning Tone: The promoting audio when user does not put the handset on the cradle properly.
7. Ring Back Tone：The promoting audio when the remote end is ringing.
8. MWI Dial Tone：The promoting audio when an unread voicemails existed.
9. Holding Tone：Indicate the local end that the current calling is hold by the remote end.
10. Conference Tone：The promoting audio to all parties when a 3 way conference is in progress.

4.5.6 Line key

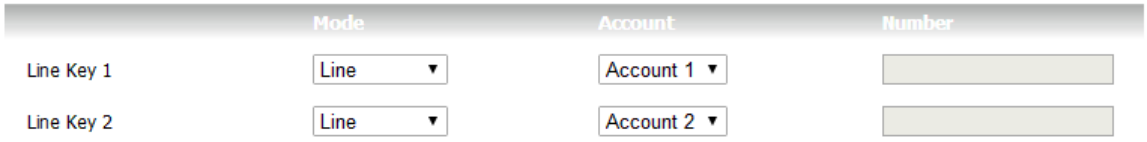

Configure functions for link keys, defaults to Line, BLF and speed dial are available.

4.6 Update

4.6.1 Manual Update

1. Firmware: Download firmware from ATCOM's webpage, then select firmware from your PC to upgrade.
2. Configuration: Upload and download config.xml file.

3. Phone Book: Upload and download phonebook.xml file

4.6.2 Update/Auto Provision

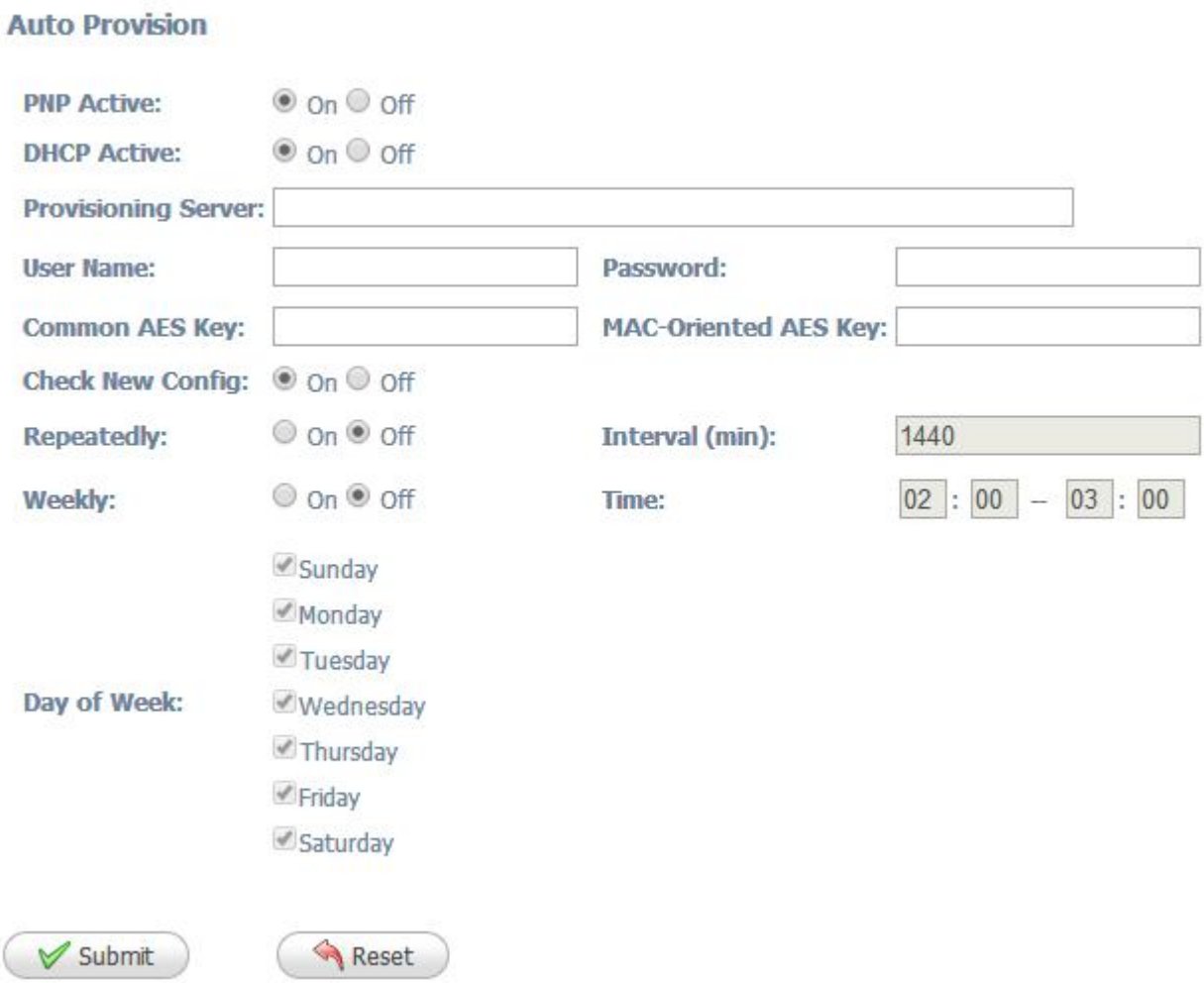

Configuration Profile

1. PNP Active: Select "On" or "Off" to enable or disable PNP automatic updates.
2. DHCP Active: Select "On" or "Off" to enable or disable DHCP option automatic updates.
3. Provisioning Server: The address to save control file for auto upgrading, it can filled by http、https、tftp server、ftp server.For example: tftp://192.168.1.111
4. User Name: The user name to access the file server
5. Password: The password to access the file server
6. Common AES Key: Configures the plaintext AES key for decrypting the Common CFG file.
7. MAC-Oriented AES Key: Configures the plaintext AES key for decrypting the MAC-Oriented CFG file.
8. Check New Config: If set this parameter as "On", the phone will do some check for upgrading, and it will upgrade automatically once the conditions are met
9. Repeatedly: If set this parameter as "On", the phone will do some check for upgrading after "Interval(minutes)", and it will upgrade automatically once the conditions are met
10. Interval(minutes) : This parameter is configurable once the Repeatedly is "On"
11. Weekly: If set this parameter as "On", the phone will do the check for upgrading at a certain

time in every week

12. Time: The time range that the phone do the check for upgrading every week, and it's configurable once the Repeatedly is "On"
13. Day of week: The day of week that the phone do the check for upgrading every week, and it's configurable once the Repeatedly is "On"

4.6.3 Reset & Reboot

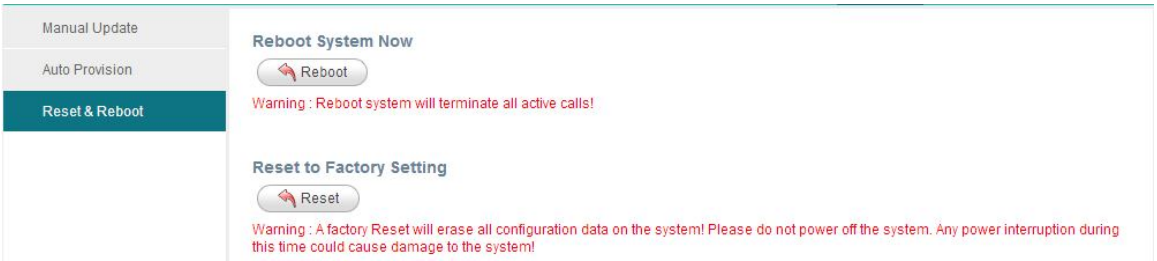

1. Reboot

Reboot will terminate all active calls, and restart the phone in a several seconds.

2. Reset

Click the "Reset" button will set A21W to factory default, please backup the config.xml and phonebook.xml.

4.7 Phone Book

4.7.1 Phonebook

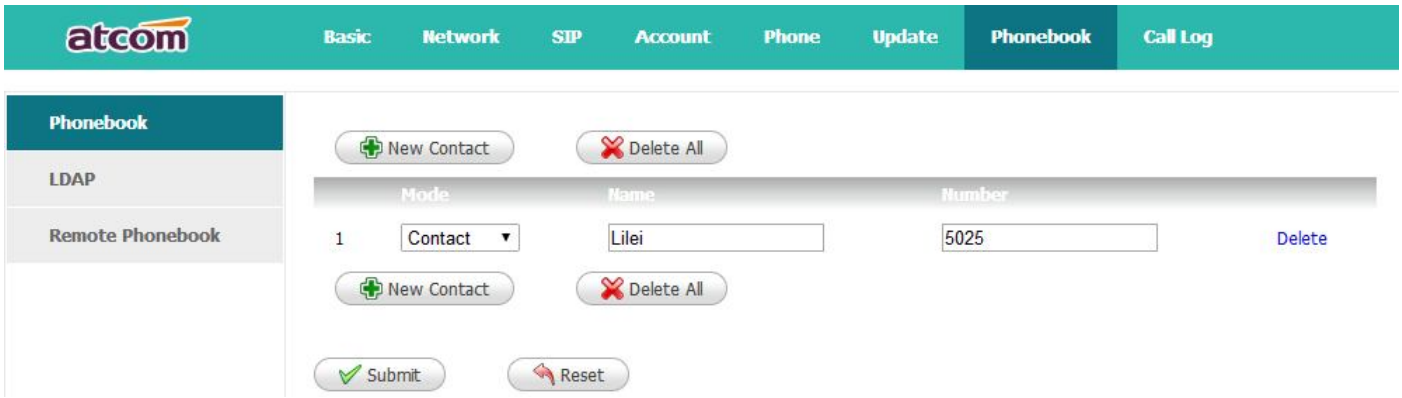

1. New Contact: Add a new phonebook record.
2. Delete All: Delete all the phonebook records.
3. Mode: Contact or Blacklist. All calls from Blacklist will be rejected.
4. Name: Specify a name for each phone number. This name will be displayed on LCD when call to this number or call from this number.
5. Number: Phone number.
6. Submit: Submit to apply the change.
7. Reset: Cancel the inputting.
8. Delete: Delete this record.

Notice：The maximum of records in the phone book is 1000.

4.7.2 LDAP

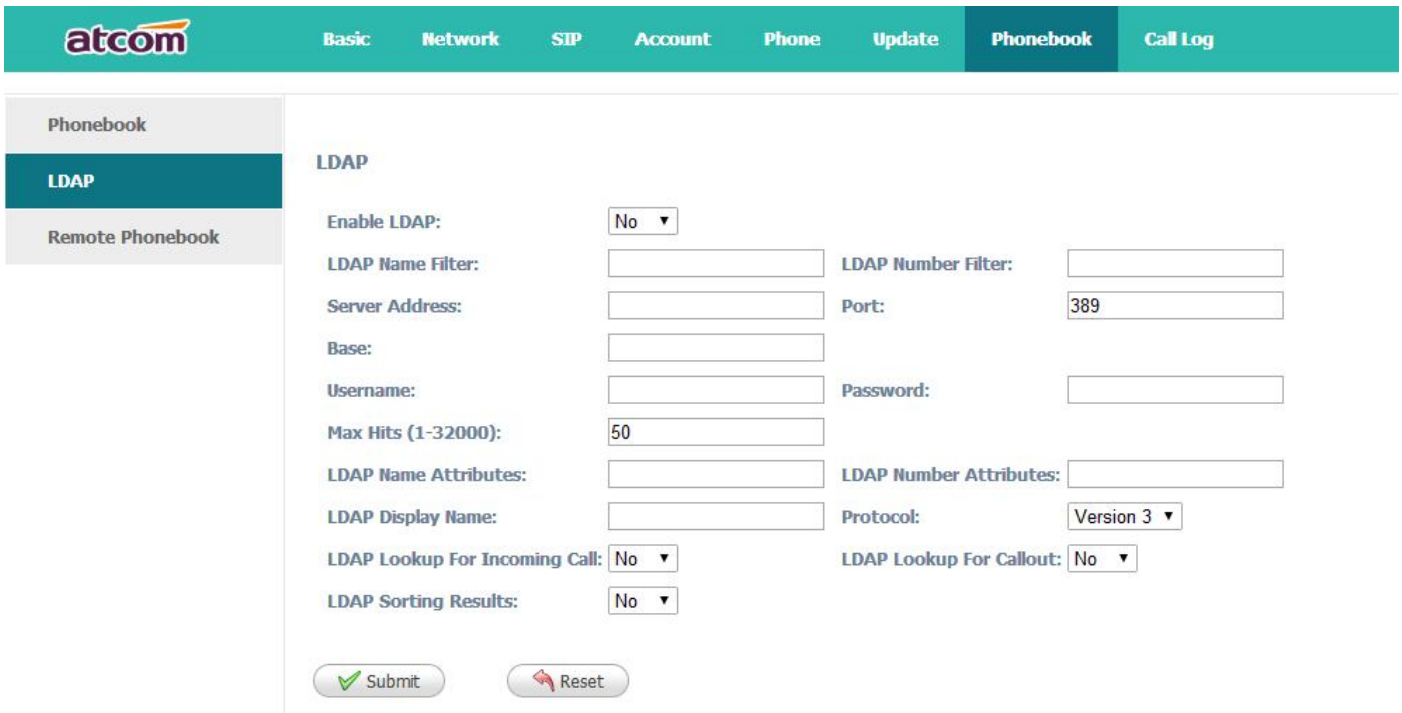

1. Enable LDAP: Select “Yes” or “No” to enable or disable LDAP.
2. LDAP Name Filter: Set the name of the LDAP search attributes.
3. LDAP Number Filter:Set the number of the LDAP search attributes.
4. Server Address:Set the LDAP server domain name or IP address.
5. Port:Set the LDAP server port number.Defauts to 389.
6. Base:Set the LDAP search base.
7. Username:Set the LDAP server username.
8. Password: Set the LDAP server password.
9. Max Hits(1~32000): Set the maximum number of search results from the LDAP server.
10. LDAP Name Attributes: Set the name of the attributes returned from the server.
11. LDAP Number Attributes:Set the number of the attributes returned from the server.
12. LDAP Display Name: The contact record the name of the displayed on the LCD.
13. Protocol: Set the phone to support LDAP protocol version.Defauts to version 3.
14. LDAP Lookup For Incomining Call: Set the phone for LDAP search when incoming call.
15. LDAP Lookup For Callout: Set the phone for LDAP search when dialing,
16. LDAP Sorting Results: Set the phone to sort the search results.

4.7.3 Remote Phonebook

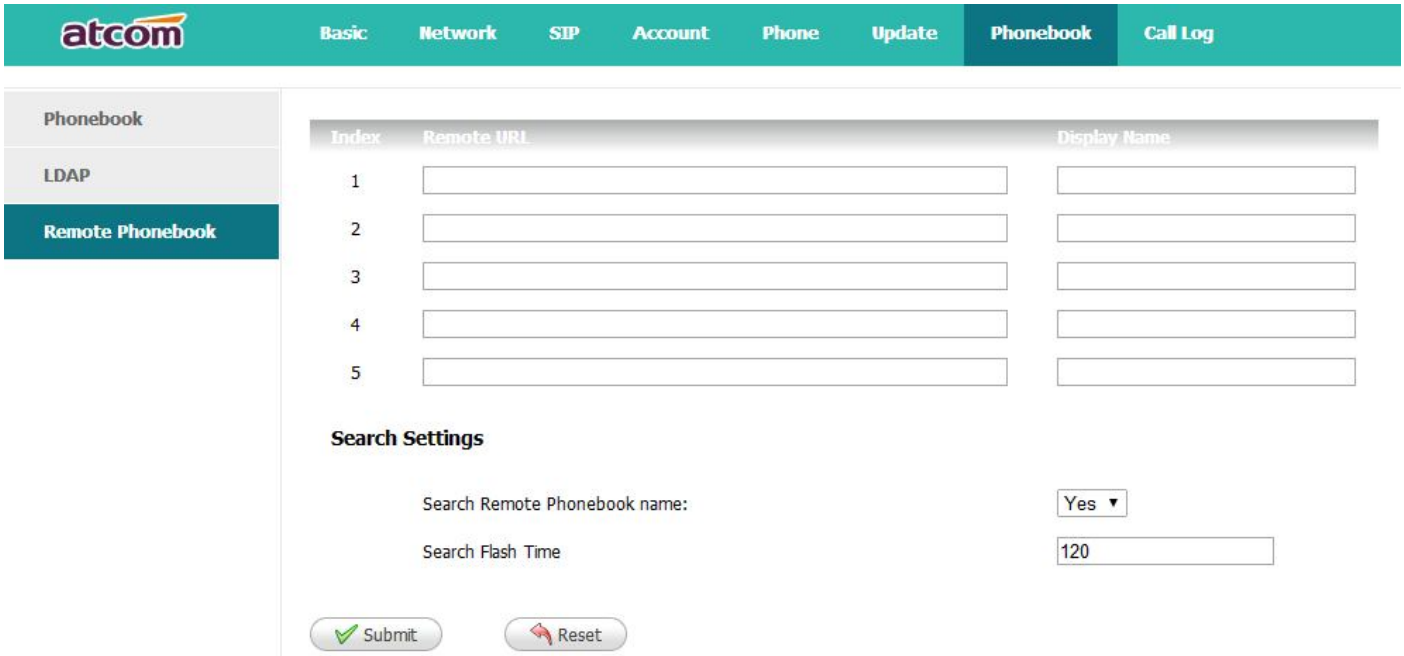

1. Remote URL: Set a remote phonebook download path.Support the TFTP,FTP,HTTP and HTTPs server.
2. Display name: Set a display name on the phone.
3. Search Remote Phonebook name:Select "Yes" or "No" to enable or disable search remote phonebook name.
4. Search Flash Time: Set the search flash time.Defauts to 120.

4.8 Call Log

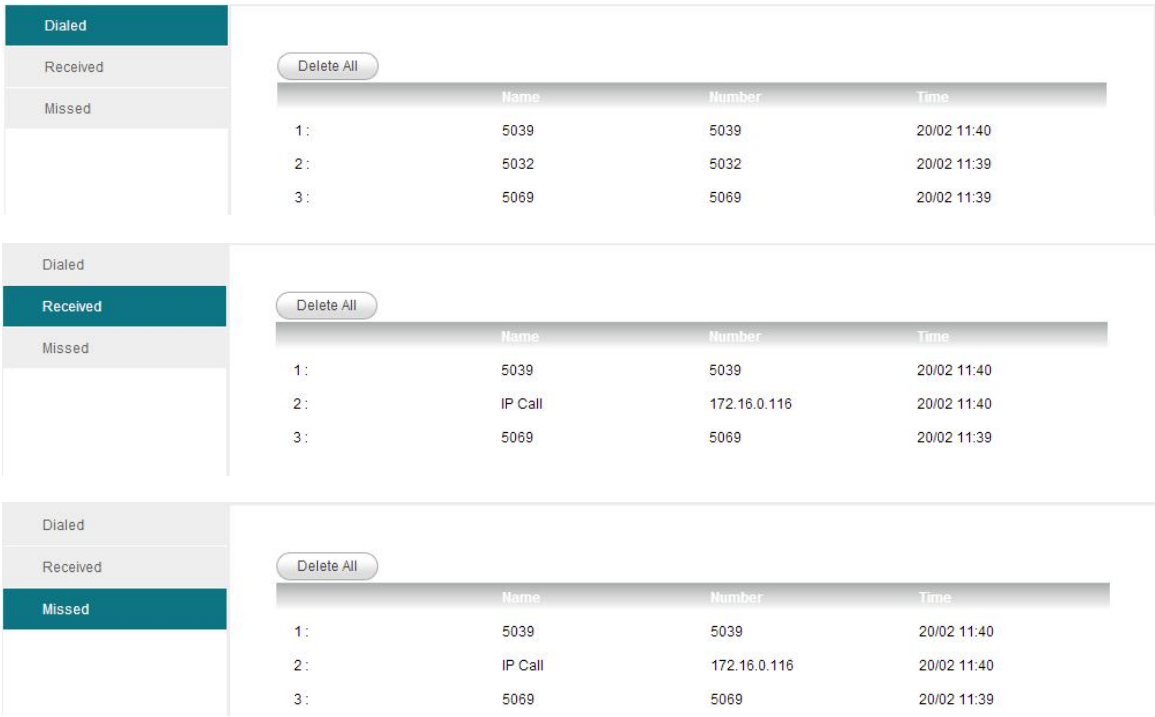

1. Redial: Record of dialed list, maximum 200 records.
2. Received: Record of received list, maximum 200 records.
3. Missed: Record of Missed list, maximum 200 records.

5. Wi-Fi(A21W only)

1、Configure the wifi on the phone

1、Press "**Menu**"-"**Network**"-"**Connect Mode**",change for the wifi connection mode,press "**OK**".

2、Press "**Menu**"-"**Network**"-"**WIFI setting**"-"**WLAN**",choose the wifi you want to connect,Press "**Connect**",then input the correct wifi password.

3、Return to the standby interface,and phone successful connected to the wifi.

2、Configure the wifi on the WEB

A21W connect to network via Wi-Fi acquiescently, click "Search Wi-Fi" button to search the available Wi-Fi.

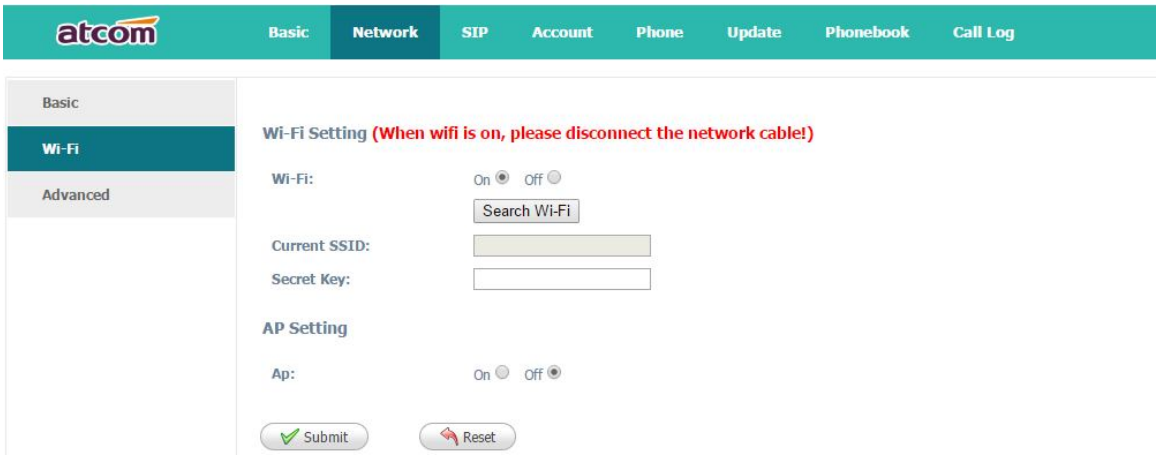

After all available Wi-Fi hotspots are list out, click the round behind the available Wi-Fi which you want to connect.

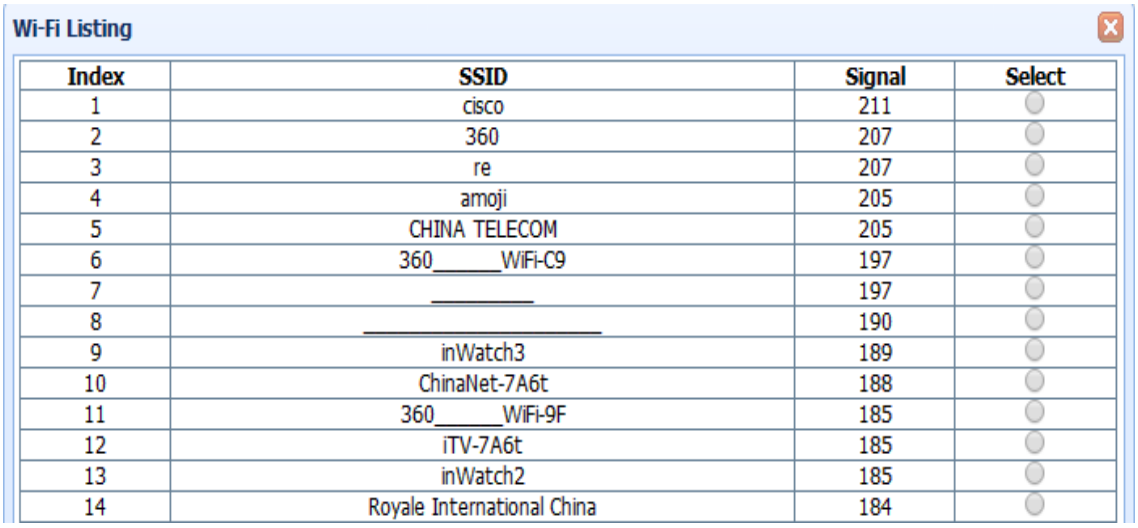

Wi-Fi Listing

Index	SSID	Signal	Select
1	cisco	211	
2	360	207	
3	re	207	
4	amoji	205	
5	CHINA TELECOM	205	
6	360_____WiFi-C9	197	
7	_____	197	
8	_____	190	
9	inWatch3	189	
10	ChinaNet-7A6t	188	
11	360_____WiFi-9F	185	
12	iTV-7A6t	185	
13	inWatch2	185	
14	Royale International China	184	

Input the right "**Secret Key**" and then click the "**Submit**" button, the phone will reboot, and you should disconnect the wire that connect to A21W during rebooting, or the phone will connect to network via wire preferentially. The Wi-Fi icon will display on the home screen, it means connect failed when the icon come with , you should to check the configuration.

6. FAQ & Trouble Shooting

Frequently Asked Questions

6.1 How to make a factory reset

There are three ways to make a factory reset:

1.Factory reset from keyboard, steps are:

a) Press and input password 123.

b) Find and select '13 Factory Reset'.

c) Press 'OK' key, then the phone will be restarted automatically and factory reset.

2.Factory reset through web, please refer to Reset & Reboot;

3. Factory reset during rebooting, steps are:

a) Press '*' and '#' key immediately after plugging in the power adapter.

b) Wait for about 5 seconds, A21W will be reset to factory default setting after rebooted.

6.2 Upgrade firmware under safe mode

If the phone could not start up normally, please upgrade firmware under safe mode. Steps are:

1. Build a TFTP server and set its IP address as 192.168.1.200.
2. Modify the software name as A21W.tar.gz . After decompression,modify the app file name as A21W.FW and copy the firmware to the root directory of the TFTP server.
3. Make sure the TFTP server and the phone are connecting with the same switch and reachable to each other;
4. Keep pressing '#' key and start up the phone until the LCD displays 'Upgrading…';
5. The phone will download the firmware from the TFTP server;
6. After the download is done, the phone will upgrade automatically;
7. After the update is finished, the phone will start up with the factory configuration.

6.3 How to make direct IP call

When hook off/ pressing speaker or headset key,

1. Press soft key 'Num' until it switch to 'IP'.
2. Using '*' key to input '.'. If user wants to dial 192.168.1.100, then press 192*168*1*100.
3. After inputting the IP address, press dial key to dial it out.

7. Trouble Shooting

7.1 The phone can't register successfully

1. Check the IP address, and if the mode of WAN port is DHCP, please make sure the DHCP server is in service.
2. Check the gateway.
3. Check the DNS.
4. Make sure the information of the account is consistent with which offered by the service supplier.
5. Make sure the SIP server is on.
6. Check the port of the SIP server whose default value is 5060.

7.2 The phone can't obtain IP address

1. Make sure the cable has been connected to the LAN port of the phone.
2. Make sure the cable and the switch's port that connected with the cable is available.
3. Make sure the DHCP server is on and there are some assignable IP addresses in the address pool.
4. Try to change the LAN port mode as Static.

7.3 Only one part can hear the voice during the call

1. Make an IP dial-up call to make sure the telephone receiver and microphone are normal.
2. Enable STUN on web page.
3. Set STUN server as stun.sipgate.com.
4. Click 'submit' and wait for the phone to restart.
5. Try to make calls again.

8. Abbreviations

DND ： Do Not Disturb
CFWD ： Call Forward
Bxfer ： Blind Transfer
Conf ： Conference
Num ： Number
DelChr ： Delete Char
Y/N ： Yes/No
SIP：Session Initiate Protocol
RTP：Real-time Transport Protocol
SDP：Session Description Protocol
VPN：Virtual Private Network
VLAN：Virtual Local Area Network
QoS：Quality of Service
Syslog ： System log
UDP：User Data Protocol
TCP：Transmission Control Protocol
TLS：Transport Layer Security Protocol
BLF：Busy Lamp Field
DNS：Domain Name System
SRTP：Secure Real-time Transport Protocol
NTP：Network Time Protocol
VAD：Voice Activity Detection
CNG：Comfort Noise Generator

NOTE: This equipment has been tested and found to comply with the limits for a Class B digital device, pursuant to part 15 of the FCC Rules. These limits are designed to provide reasonable protection against harmful interference in a residential installation. This equipment generates, uses and can radiate radio frequency energy and, if not installed and used in accordance with the instructions, may cause harmful interference to radio communications. However, there is no guarantee that interference will not occur in a particular installation. If this equipment does cause harmful interference to radio or television reception, which can be determined by turning the equipment off and on, the user is encouraged to try to correct the interference by one or more of the following measures:

—Reorient or relocate the receiving antenna.

—Increase the separation between the equipment and receiver.

—Connect the equipment into an outlet on a circuit different from that to which the receiver is connected.

—Consult the dealer or an experienced radio/TV technician for help.

This device complies with part 15 of the FCC rules. Operation is subject to the following two conditions:
(1) this device may not cause harmful interference, and
(2) this device must accept any interference received, including interference that may cause undesired operation.

Changes or modifications to this unit not expressly approved by the party responsible for compliance could void the user's authority to operate the equipment.