Hisense

32H3B*
40H3B*

H3B Series TV
Quick Start Guide

Help Hisense improve the environment by reducing paper waste.
For detailed instructions and feature descriptions, access the full User Manual online .

© 2015 Hisense Company Ltd. All Rights Reserved.

All material in this Quick Start Guide is the property of Hisense Company Ltd. and its subsidiaries, and is protected under US, CANADA, MEXICO and International copyright and/or other intellectual property laws. Reproduction or transmission of the materials, in whole or in part, in any manner, electronic, print, or otherwise, without the prior written consent of the Hisense Company Ltd. is a violation of Hisense Company Ltd. rights under the aforementioned laws.

No part of this publication may be stored, reproduced, transmitted or distributed, in whole or in part, in any manner, electronic or otherwise, whether or not for a charge or other or no consideration, without the prior written permission of Hisense Company Ltd.

Requests for permission to store, reproduce, transmit or distribute materials may be made to one of the following addresses:

USA: Hisense USA Corporation
PO Box 3289
Suwanee, GA 30024

CANADA: Hisense Canada Co., Ltd,
405 Britannia Rd E., Suite 11
Mississauga, Ontario,L4Z 3E6

MEXICO: Boulevard Miguel de Cervantes Saavedra No. 301, Torre Norte, Piso 2,
Colonia Ampliación Granada, C.P. 11520, en México Distrito Federal.

Hisense, and any and all other Hisense product names, logo's, slogans or marks are registered trademarks of Hisense Company Ltd. and its subsidiaries. All other trademarks are the property of their respective holders.

WELCOME TO THE HISENSE FAMILY!

Congratulations on the purchase of your new Hisense TV! This Quick Start Guide will walk you through a few easy steps to set up your TV. For more details about all of the features and instructions to use them, download a PDF of the *Hisense H3B Series Smart TV User Manual* from the Hisense support website below.

Because we value your business, we want to keep you in the know of 'all things Hisense'. Using your mobile phone, scan the Registration page QR code to register your TV. Depending on the make and model of your phone, you may need to download a QR code scanning app.

Country	Customer Care Center	Hisense Support Page	REGISTER YOUR TV
U.S.A	• **Phone:** 1-888-935-8880 • **Hours of Operation:** Monday - Friday: 8 AM to 8 PM EST Saturday - Sunday: 9 AM to 6 PM EST • **Service Email:** Service@hisense-usa.com	http://www.hisense-usa.com/support/	http://www.hisense-usa.com/support/productReg.asp
CANADA	• **Phone:** 1-855-344-7367 • **Hours of Operation:** Monday - Friday: 8 AM to 8 PM EST • **Service Email:** canadasupport@hisense.com	http://www.hisense-canada.com/support/	http://www.hisense-canada.com/support/productReg.asp
MEXICO	• **Phone:** 01-800-008 8880 • **Hours of Operation:** L-V 09:00-14:00 y 15:00-18:00 • **Service Email:** servicio@hisense.com.mx	http://www.hisense.com.mx/support/	http://www.hisense.com.mx/support/productReg.asp

To view and open the user manual, you will need to install Adobe® Reader® (which is FREE) to your computer. Once you arrive on the Support page of the Hisense website, enter the model number located on the back of the TV or on the outside of the box.

Disclaimer: *This Quick Start Guide is intended as a general guideline to help you set up your Hisense TV. Images throughout this document are for illustrative purposes only and may differ from the actual product.*

Packaged contents

Your package in which you purchased your new TV contains the following items:

- TV
- A left and right leg that forms the TV stand
- *Important Safety Information and Warranty Card leaflet*
- Remote Control
- 2 AAA batteries
- *Hisense H3B Series Smart TV Quick Start Guide (this document)*
- 4 screws (ST4X12) for 32" / 4 screws (ST4X14) for 40"
- Stop Page

IMPORTANT:

To prevent accidentally discarding items that came with your TV, be sure to **check ALL of the styrofoam** in the carton box.

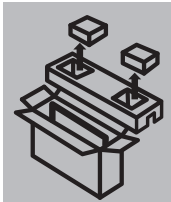

- Please check foam for accessories before discarding.
- Veuillez vérifier la mousse pour qu'il n'y ait pas d'accessoires avant de la jeter.
- Antes de desechar la espuma, asegúrese de retirar todos los accesorios.

Required tools and devices

- Phillips screwdriver (not included) to secure the TV stand
- HDMI and other types of cables (not included) to connect external devices to the TV
- Wall mount bracket (not included) if you prefer to mount the TV to the wall

BUTTONS AND PORTS ON THE H3B SERIES TV

Back View of the TV (32H3B*/40H3B*)

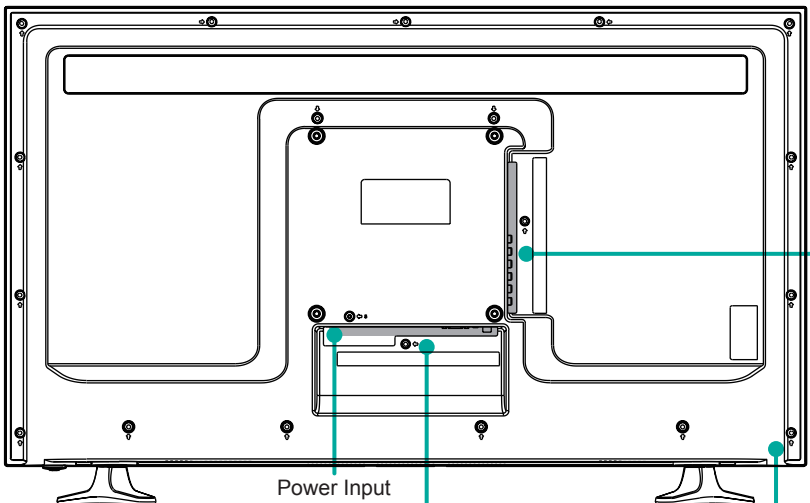

TV Side View

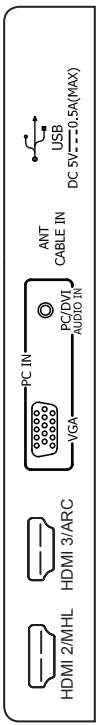

TV Bottom View

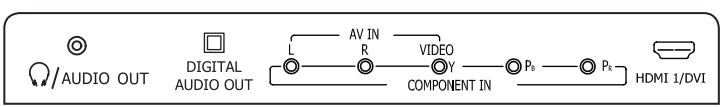

STEP 1. Attach the TV stand or wall mount bracket (not included)

Attach the TV Stand (For steps to attach the wall mount see page 7)

CAUTION:

- Be sure to disconnect the A/C power cord before installing a stand or Wall-Mount brackets.
- The LED display is very fragile and must be protected at all times when installing the legs that form the stand. Be sure to protect the TV screen from getting scratched or damaged by any hard objects. In addition, DO NOT exert pressure on the front of the TV at any time because it could crack.

To attach the left and right leg that forms the stand:

1. Carefully place your TV face down on a soft, flat surface to prevent damage to the TV or scratching to the screen.
2. Remove the 2 legs from the foam and then insert the stands into the bottom slots of the TV.
3. Use the screws that came inside the carton with your TV to secure each leg tightly.

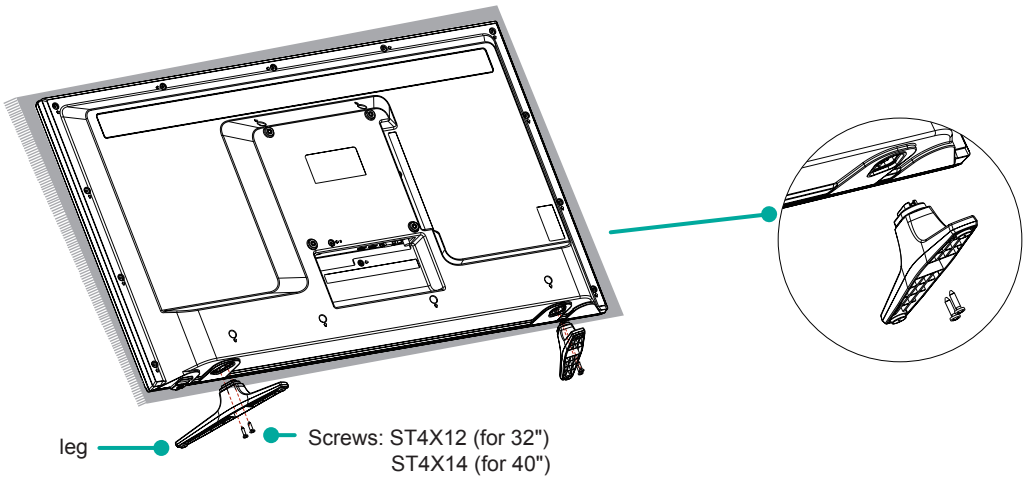

Attach the Wall Mount Bracket (not included)

Before you begin the third-party manufacturer instructions, be sure to do the following things:

1. Remove the TV stand if you already attached it.
2. Place the TV face down on a clean, safe and cushioned surface.
3. Place the spacers (not included) in the corresponding bracket holes.

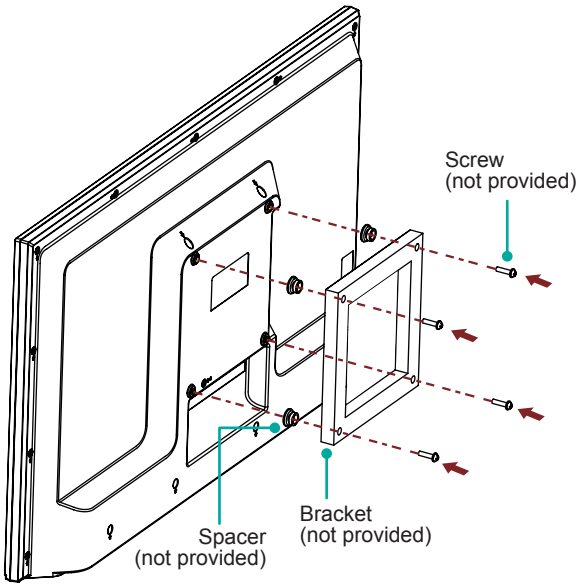

CAUTION:

- **When you attach the mount, be sure to use the spacers (provided by the third-party manufacturer) between the TV and the bracket.**
- **To prevent internal damage to the TV and ensure it is mounted securely, be sure to use fixing screws (not provided) that are 9.5 - 11.5 mm in length when measured from the attaching surface of the mounting hook.**

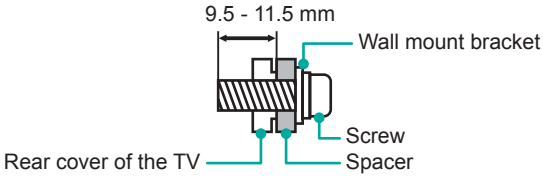

Wall mount hole pattern VESA (mm)	200 × 100 (32H3B*) 200 × 200 (40H3B*)
Wall mount screw size (mm)	M6

Follow instructions provided with the Wall mount bracket.

- To complete the installation, please contact the wall-mount manufacturer or the retailer from which you purchased the TV.
- The selected screws are 9.5 - 11.5 mm in length when measured from the attaching surface of the rear cover. The diameter and length of the screws differ depending on the Wallmount bracket model.

NOTE: The diameter and length of the screws differ depending on the wall mount bracket model.

STEP 2. Connect devices to your TV

Check to ensure that you have selected the right cables for the ports and that they are connected securely. Loose connections can affect the quality of the picture image and color.

TV label		Port	Cable	External Equipment	Brief Description
ANT/CABLE IN				Antenna; VHF/UHF Antenna, Cable, ANT OUT	Connect an outdoor VHF/UHF antenna.
HDMI				VCR; DVD Player/Recorder; Video Camera; Set-top Box; Satellite antenna cable; Satellite Receiver	Connect a High Definition Multimedia Interface (HDMI) cable from an external device.
COMPO-NENT IN	Y		Green		Connect a component video cable and left-right audio cables from an external AV device.
	P_B		Blue		
	P_R		Red		
	L		White		
	R		Red		
AV IN	VIDEO		Green		Connect a composite video cable and left-right audio cables from an external AV device.
	L		White		
	R		Red		
PC IN	VGA			PC	Connect a VGA cable from your PC to use the TV as a monitor. Connect an audio cable from the PC audio out.
	PC / DVI AUDIO IN				

TV label	Port	Cable	External Equipment	Brief Description
DIGITAL OUTPUT (Optical)			Audio Amplifier Speaker	Connect an optical cable from an external digital audio system.
🎧 / AUDIO OUT				Connect headphones to hear audio from the TV.
		White Red	Speaker Audio Amplifier	Connect an audio adapter (not provided) from an external analog audio system.
USB DC 5V ⎓ 0.5A(MAX)				Connect a USB device for browsing photos, music and movies. The unit only recognizes a USB Memory Stick.

Buttons on your TV remote

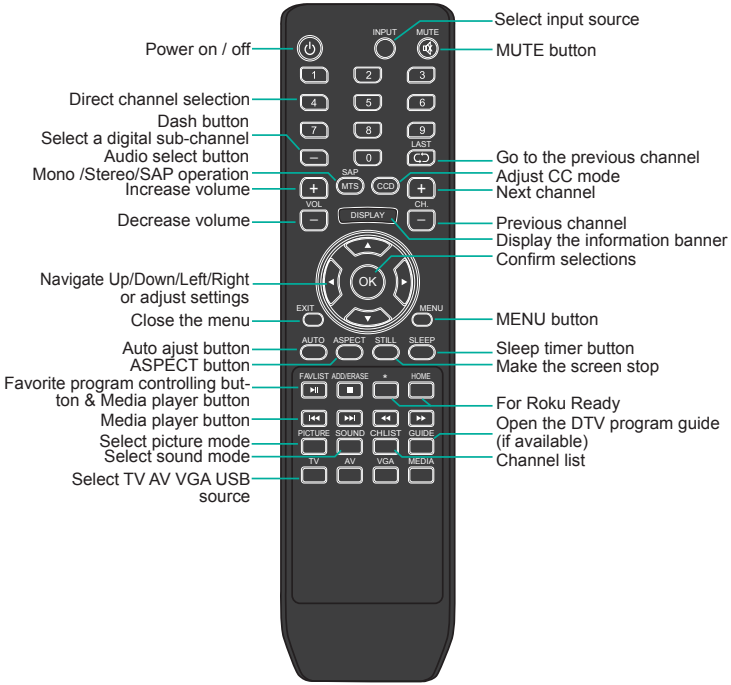

STEP 3. Begin using your remote

1. Slide the back cover to open the battery compartment of the remote control.

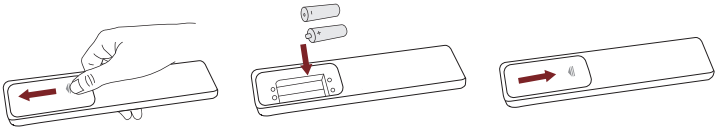

Gently push and slide | Insert the batteries | Gently push and slide

2. Insert two AAA size batteries. Make sure to match the (+) and (-) ends of the batteries with the (+) and (-) ends indicated in the battery compartment.
3. Replace the battery compartment cover.

Important Information about the remote and batteries:

- **Discard batteries in a designated disposal area. Do not throw them into a fire.**
- **Remove old batteries immediately to prevent them from leaking into the battery compartment.**
- **If you do not intend to use the remote control for a long time, remove the batteries.**
- **Battery chemicals can cause a rash. If the batteries leak, clean the battery compartment with a cloth. If chemicals touch your skin then wash it immediately.**
- **Do not mix old and new batteries.**
- **Do not mix alkaline, standard (carbon-zinc) or rechargeable (NiCd, NiMH, etc.) batteries.**
- **Do not continu e using the rem ote if it gets warm or hot.**

  Call our Support Center immediately on the Hisense support website.

Remote Control Range Information

- The remote control can work at a distance of up to 26 feet in front of the TV set.
- It can work at a 30 degree horizontal or vertical angle.

Program Your Universal Cable or Satellite Remote Control to Operate Your New Hisense Television (only for USA)

If you would like to program your other household remote controls to your new Hisense television,please refer to the User's Manual supplied by your Cable or Satellite provider. The Cable or Satellite providers' User's Manuals should include instructions on how to program their remote to your television.

A list of Hisense codes for the most common Cable and Satellite providers are listed below. Use the Hisense code that is associated with your Cable or Satellite provider (if applicable).

DIRECTV.....0178, 10178, 10019, 10748, 11314, 11660, 11710, 11780, 12049, 10171, 11204, 11326, 11517, 11564, 11641, 11963, 12002, 12183

Time Warner Cable.....386, 0178, 10178, 400, 450, 461, 456, 0748, 1463, 0463, 10463

Comcast.....0178, 10178, 10463, 11463, 10748, 11314, 11660, 10171, 11204, 11326, 11517, 11641, 11780, 11785, 11892, 11963, 12002

Cox Communications.....0178, 10178, 1326, 1463

Dish Network.....505, 627, 538, 720, 659

If the Hisense code associated with your Cable or Satellite provider is not listed, does not work or you cannot locate the instructions to program your remote, call your local Cable or

Satellite provider's customer service center.

If your Cable or Satellite provider does not have a Hisense code available, please visit www.hisense-usa.com for additional codes.

Using Your Cable Set-top Box or Satellite Receiver Remote as a 'Universal' Remote

If you prefer to use your Cable Set-top Box or Satellite Receiver Remote as a 'Universal Remote', please refer to the manual that your cable or satellite service provided. It will include instructions on how to program their remote to your television. You can find codes that work with your **Hisense TV** and the most common cable and satellite provider's universal remote control at:

- **www.hisense-usa.com/support**
- **www.hisense-canada.com/support**
- **www.hisense.com.mx/support**

STEP 4. Power on the TV

Plug the power cord into a power outlet.

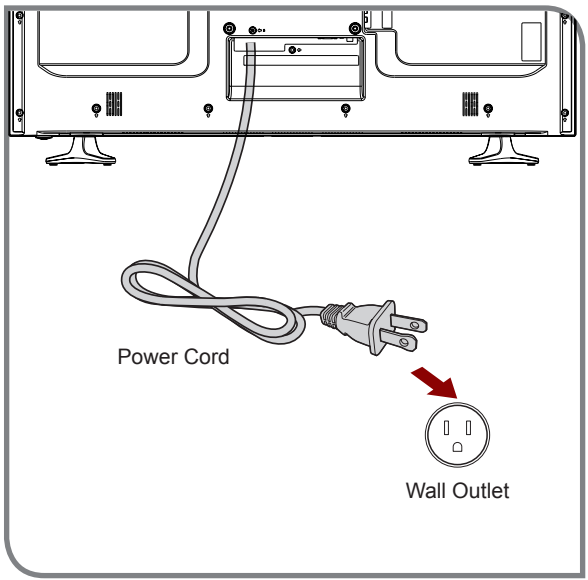

Press the **Power button** ⏻ on the remote to turn on the TV. A splash screen that shows the Hisense logo appears. Next, the First-Time Setup Menu begins by prompting you to choose your **Language**, **Country**, and **Time Zone**.

STEP 5. Complete the first-time setup menu

After the splash screen that shows the Hisense logo appears, begin the first-time setup menu.

Menu	Operations
Language setting	• Choose your language: **English**, **Spanish** or **French** and then select **Go to next step**.
Time zone setting	• Select the local time zone according to your region. • Daylight Saving: Set the Daylight Savings time for your area.
Use Mode	• Select your Mode Setting: Home Mode or Retail Mode. • **Home Mode** is the recommended setting which offers full functionality of the television. If you selected **Retail Mode**, Energy Savings is not realized.
Channel Search	• Select your Tuner Mode: Air or Cable, press **OK button** to confirm. • Select Go to next step and press OK button to scan channels

STEP 6. Selecting the Input Source

When you finish the first-time setup, you must select the TV signal source. Because your TV stores this information, you do not need to change the TV signal source unless it changes. For example, you change from an outside antenna to cable TV.

- Turn on your TV, then press **INPUT button** on the remote or on the TV. The INPUT menu opens.
- Press **▲/▼ button** to highlight the input source, then press **OK button**.

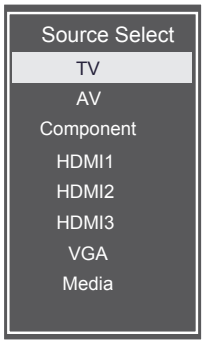

PRODUCT SPECIFICATIONS

Model Name		32H3B*	40H3B*
Dimension (W × H × D)	Without Stand	28.9 × 17.1 × 3.5 inches (733 × 434 × 89 mm)	35.5 × 20.6 × 3.4 inches (902 × 523 × 86 mm)
	With Stand	28.9 × 18.8 × 7.1 inches (733 × 477 × 180 mm)	35.5 × 22.2 × 8.0 inches (902 × 563 × 204 mm)
Weight	Without Stand	10.8 lbs (4.9 kg)	18.1 lbs (8.2 kg)
	With Stand	13.9 lbs (6.3 kg)	23.2 lbs (10.5 kg)
Active Screen Size (Diagonal)		31.5 inches	39.6 inches
Screen Resolution		1366 × 768	1920 × 1080
Audio Power		6 W + 6 W	7W + 7 W
Power Supply		120 V ~ 60 Hz	
Receiving systems	Analog	NTSC	
	Digital	ATSC / QAM	
Receiving Channels		VHF: 2~13 UHF: 14~69 CATV: 1 ~ 125 Digital Terrestrial Broadcast (8VSB): 2 ~ 69 Digital cable (64/256 QAM): 1 ~ 135	
Tuner Type		Frequency synthesized	
Environmental Conditions		Temperature: 41°F ~ 95°F (5°C ~ 35°C) Humidity: 20% ~ 80% RH Atmospheric pressure: 86 kPa ~ 106 kPa	
Component Input		480 I / 60 Hz, 480 P / 60 Hz, 720 P / 60 Hz, 1080 I / 60 Hz, 1080 P / 60 Hz	
VGA Input		VGA (640×480 / 60 Hz), SVGA (800×600 / 60 Hz), XGA (1024×768 / 60 Hz)	
HDMI Input		RGB / 60 Hz (640×480, 800×600, 1024×768), YUV / 60 Hz (480 I, 480 P, 720 P, 1080 I, 1080 P)	

QUICK PROBLEM-SOLVING TIPS

When you experience an issue with your TV, turn it off and on again. If this does not resolve the problem, then refer to the tips below. If the problem is still not resolved, then refer to our contact information on page 2.

ISSUES	POSSIBLE SOLUTIONS
There is no sound or picture from the TV	• Check to see if the power cord is plugged into a power outlet. • A power switch on the right side bottom edge of the front panel must be turned on. Press the ⏻ **Power button** on the remote control to activate the unit from 'Standby' mode. • Check to see if the LED light is on or not. If it is, then the TV is receiving power.
I have connected an external source to my TV and do not see a picture and/or hear any sound	• Check for the correct output connection on the external source and for the correct input connection on the TV. • Make sure you have made the correct selection for the input mode for the incoming signal.
When I turn on my TV, there is a delay for a few seconds before the picture appears. Is this normal?	• Yes, this is normal. The TV is initializing and searching for previous setting information.
The picture is normal but there is no sound	• Check the volume settings. • Check if 'Mute' mode is set to **On**.
Sound but no picture or black and white picture	• If the picture is black and white, unplug the TV from the AC outlet and replug it after 60 seconds. • Check that the Color is set to 50 or higher. • Try different TV channels.
The sound and/or picture is distorted or appears wavy	• An electric appliance may be affecting the TV. Turn off any appliances that are nearby and move it farther away from the TV. • Insert the power plug of the TV set into another power outlet.
The sound and picture is blurry or cuts out	• If using an external antenna, check the direction, position and connection of the antenna. • Adjust the direction of your antenna or reset or fine tune the channel.
A horizontal or vertical stripe appears on the picture and/or the picture is shaking	• Check to see if there is an appliance or electric tool nearby that is causing interference.
The plastic cabinet makes a "clicking" type of sound	• The 'click' sound can occur when the temperature of the television changes. This change causes the television cabinet to expand or contract, which makes the sound. This is normal and the TV is OK.
The remote control does not work	• Confirm that TV still has power and is operational. • Change the batteries in the remote control. • Check if the batteries are correctly installed.

Certification and Compliance

FCC Statement

This device complies with Part 15 of the FCC Rules. Opera-tion is subject to the following two conditions: (1) this device may not cause harmful interference, and (2) this device must accept any interference received, including interference that may cause undesired operation.

NOTE:

This equipment has been tested and found to comply with the limits for a class B digital Device, pursuant to part 15 of the FCC Rules. These limits are designed to provide reasonable protection against harmful interference in a residential installation. This equipment generates, uses and can radiate radio frequency energy and, if not installed and used in accordance with the instructions, may cause harmful interference to radio Communications. However, there is no guarantee that interference will not occur in a particular installation. If this equipment does cause harmful interference to radio or television reception, which can be determined by turning the equipment off and on, the user is encouraged to try to correct the interference by one or more of the following measures:

- Reorient or relocate the receiving antenna.
- Increase the separation between the equipment and the receiver.
- Connect the equipment into an outlet on a circuit different from that to which the receiver is connected.
- Consult the dealer or an experienced radio/TV technician for help.

Energy Star

Your Hisense TV is ENERGY STAR ® qualified in the “Energy Saving” mode. It meets strict energy efficiency guidelines set by the U.S. Environmental Protection Agency and Department of Energy. ENERGY STAR is a joint program of these government agencies, designed to promote energy efficient products and practices. Changes to certain features, settings, and functionalities of this TV (i.e. TV Guide, Picture, Sound) can increase or change the power consumption. Depending upon such changed settings, the power consumption may exceed the limits required for the ENERGY STAR qualification in the “Energy Saving” mode.

NOTE

Where the MAINS plug or an appliance coupler is used as the disconnect device, the disconnect device shall remain readily operable.

WARNING

The manufacturer is not responsible for any radio or TV interference caused by unauthorized modifications to this equipment. Such modifications could void the user's authority.

This TV incorporates High-Definition Multimedia Interface (HDMI™) technology.
HDMI, the HDMI logo and High-Definition Multimedia Interface are trademarks or registered trademarks of HDMI Licensing LLC.

Hisense and associated logos where applicable are registered trademarks of Hisense Group in the United States and/or other countries. All other trademarks are property of their respective owners. 2011 Hisense USA, Corporation. All Rights Reserved.
Manufactured under license from Dolby Laboratories. Dolby and the double-D symbol are trademarks of Dolby Laboratories.

* Specifications subject to change without notice.

R