Hisense

75H9

Quick Start Guide

Help Hisense improve the environment by reducing paper waste.
For detailed instructions and feature descriptions,
access the full User Manual online at www.hisense-usa.com/support.

ES-JXXXXXX

GET THE MOST OUT OF YOUR TV

For easy-to-follow instructions and beneficial information to help you maximize the features of your TV, access the online *User Manual* at **www.hisense-usa.com/support**.

To access the user manual, you will need to enter your model number (located on the side and back of the TV). You can also find the model number on the outside of the box.

From the **Support** page, you can also:

- Access Frequently Asked Questions
- Download the latest software for your product and
- Order Accessories

To speak to a representative in our Electronics Consumer Care Center, call 1-888-935-8880 Monday through Friday from 8 A.M. to 8 P.M. EST and Saturday through Sunday from 9 A.M. to 6 P.M. EST.

You can also send an email to Service@hisense-usa.com.

This Quick Start Guide is intended as a general description of setting up and connecting your TV. Images throughout this Quick Start Guide are for illustrative purposes only and may differ from the actual product.

REGISTER YOUR TV TO RECEIVE HISENSE NEWS

Using your mobile phone, scan the first QR code to register your TV and the second QR code to access the Support page. Depending on the make and model of your phone, you may need to download a QR code scanning application. Although we encourage you to register your TV, it is optional and will not impact the Warranty or level of service that we provide.

Registration QR code

Support page QR code

PACKAGE CONTENTS

Your package in which you purchased this TV contains the following items:

- TV
- Remote Control
- 2 AAA batteries
- Quick Start Guide (this document)
- Important Safety Information and Warranty Card

IMPORTANT: Look inside the styrofoam (within the upper and bottom parts of the box) to make sure that you have removed all items that come with the TV.

Required Tool to Install the TV Stand

Phillips screwdriver (not included)

INITIAL SETUP STEPS

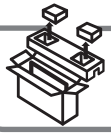

Please check foam for accessories before discarding.

Step 1. Attach the TV Stand or Wall Mount Bracket

Attach the TV Stand

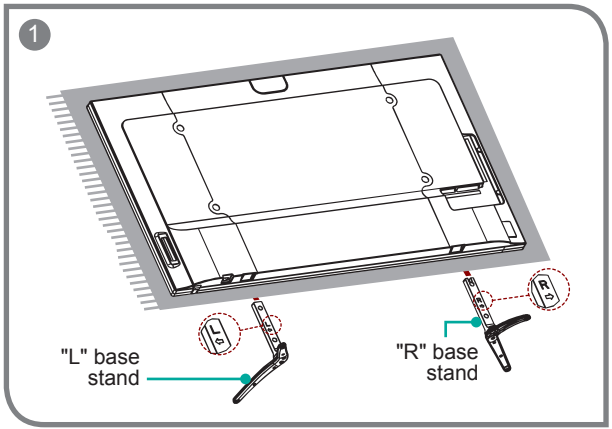

Carefully place your TV facedown on a soft, cushioned surface to prevent damage to the TV or scratching to the screen.
Insert the base stand into holes at the bottom of the TV. (Pay attention to the words written on the bezel of the base stand, based on the back view of the TV, "L" is the LEFT, "R" is the RIGHT.)

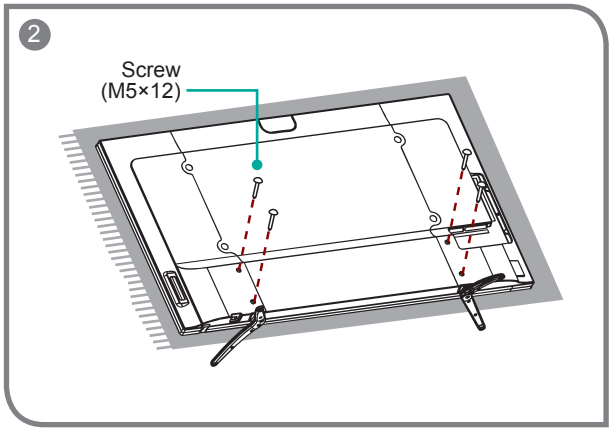

Fix the base stand to the TV with the 4 screws (M5×12) provided.

NOTE: Installing the stand is only for reference, the machine base has been installed at the factory before delivery.

Attach the Wall Mount Bracket (not included)

Before you begin the third-party manufacturer instructions, be sure to do the following things:

1. Remove the TV stand if you already attached it.
2. Place the TV face down on a clean, safe and cushioned surface.
3. Place the spacers (not included) in the corresponding bracket holes.

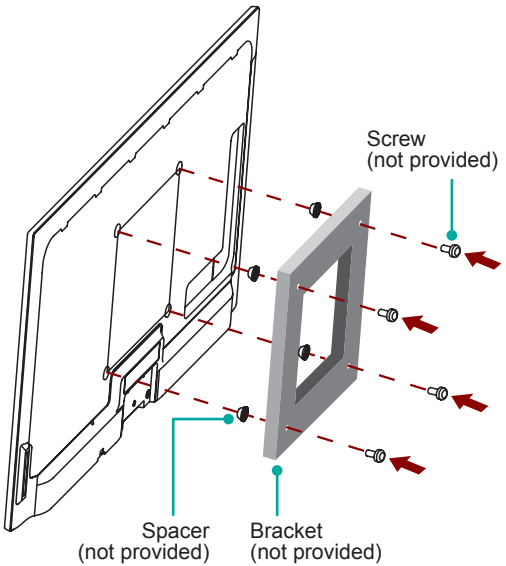

CAUTION:

- **When you attach the mount, be sure to use the spacers (provided by the third-party manufacturer) between the TV and the bracket.**
- **To prevent internal damage to the TV and ensure it is mounted securely, be sure to use fixing screws (not provided) that are 9 - 10 mm in length when measured from the attaching surface of the mounting hook.**

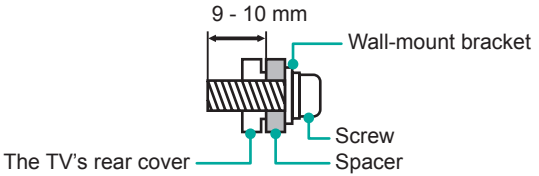

Wall-mount hole pattern VESA (mm)	1000 × 400
Wall-mount screw size (mm)	M8

Follow instructions provided with the Wall-Mount bracket.

- contact a professional installer or service technician for assistance. Hisense is not responsible for any damages or injuries that occur due to mishandling or incorrect assembly.
- The selected screws are 9 - 10 mm in length when measured from the attaching surface of the TV's rear cover. The diameter and length of the screws differ depending on the Wall-Mount Bracket model.

Step 2. Connect Devices to the TV Ports

Check to ensure that you have selected the right cables for the ports and that they are connected securely.

TV label		Port	Cable	External Equipment	Brief Description
ANT/CABLE				Antenna; VHF/UHF Antenna; Cable; ANT OUT	Connect an outdoor VHF/UHF antenna.
HDMI				VCR; DVD Player/Recorder; Video Camera; Set-top Box; Satellite antenna cable; Satellite Receiver	Connect a High Definition Multimedia Interface (HDMI) cable from an external device.
COMPONENT IN	Y		Green		Connect a component video cable and left-right audio cables from an external AV device.
	P_B		Blue		
	P_R		Red		
	L		White		
	R		Red		
AV IN	VIDEO		Yellow		Connect a composite video cable and left-right audio cables from an external AV device.
	L		White		
	R		Red		
PC IN	VGA			PC	Connect a VGA cable from your PC to use the TV as a monitor. Connect an audio cable from the PC audio out.
	PC / DVI AUDIO IN				

TV label	Port	Cable	External Equipment	Brief Description
DIGITAL AUDIO OUT			Audio Amplifier Speaker	Connect an optical cable from an external digital audio system.
AUDIO OUT / 🎧				Connect headphone for audio out of the TV.
		White Red	Speaker Audio Amplifier	Connect an audio adapter (not provided) from an external analog audio system.
USB DC 5V ⎓ 0.5A(MAX)				Connect a USB device for browsing photos, music and movies.
LAN			LAN	Connect an Ethernet cable to access a network or the Internet. The TV also has a wireless connectivity feature.
DEBUG	-			This is only available for manufacturers to use. Do not connect any devices to this port.

Step 3. Place Batteries in the Remote Control

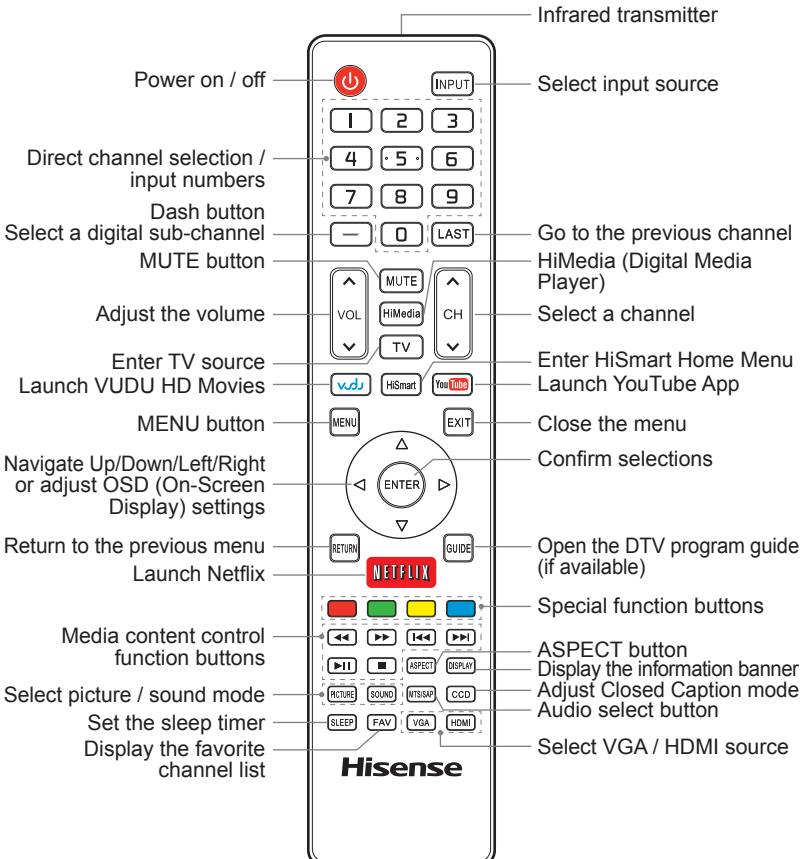

1. Press the release button on the back of the remote control to remove the battery compartment cover.

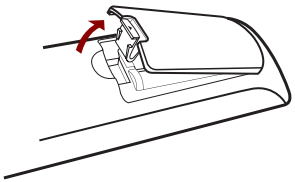

Remove the battery compartment cover

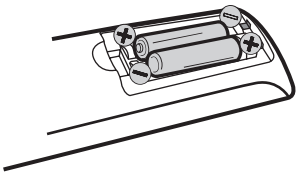

Insert the batteries

2. Insert two AAA size batteries. Make sure to match the (+) and (-) ends of the batteries with the (+) and (-) ends indicated in the battery compartment.
3. Replace the battery compartment cover.

NOTES:

- **Dispose of your batteries in a designated disposal area. Do not throw the batteries into a fire.**
- **Remove old batteries immediately to prevent them from leaking into the battery compartment.**
- **If you do not intend to use the remote control for a long time, remove the batteries.**
- **Battery chemicals can cause a rash. If the batteries leak, clean the battery compartment with a cloth. If chemicals touch your skin, wash immediately.**
- **Do not mix old and new batteries.**
- **Do not mix alkaline, standard (carbon-zinc) or rechargeable (NiCd, NiMH, etc.) batteries.**

Remote Control Range Information

- The remote control can work at a distance of up to 26 feet in front of the TV set.
- It can work at a 30 degree horizontal or vertical angle.

Program Your Universal Cable or Satellite Remote Control to Operate Your New Hisense Television

If you would like to program your other household remote controls to your new Hisense television,please refer to the User's Manual supplied by your Cable or Satellite provider. The Cable or Satellite providers' User's Manuals should include instructions on how to program their remote to your television.

A list of Hisense codes for the most common Cable and Satellite providers are listed below. Use the Hisense code that is associated with your Cable or Satellite provider (if applicable).

DIRECTV..... 0178 or 10019
Time Warner Cable..... 386 or 0178
Comcast ..... 0178 or 10178
Cox Communications 0178
Dish Network ..... 627 or 505

If the Hisense code associated with your Cable or Satellite provider is not listed, does not work or you cannot locate the instructions to program your remote, call your local Cable or Satellite provider's customer service center.

If your Cable or Satellite provider does not have a Hisense code available, please visit http://www.hisense-usa.com for additional codes.

Step 4. Turn the TV on for the First Time

Connecting the power cord

- Plug the power cord into an AC outlet.

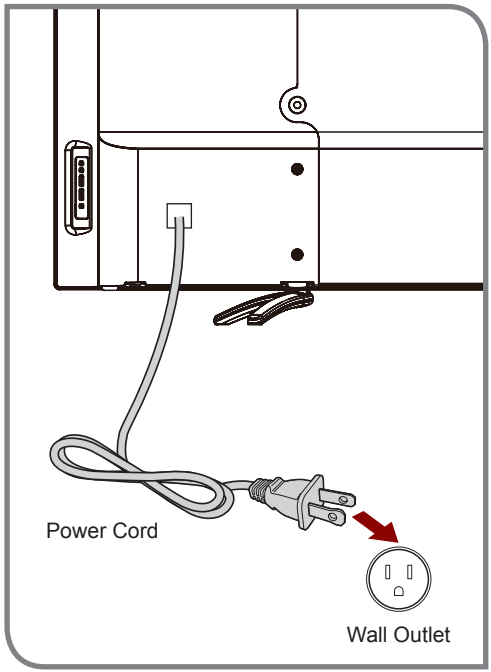

Turning your TV on

- Press ⏻ **button**. Your TV turns on.
- Press ⏻ **button** again to turn off your TV. When you turn off your TV, it goes into standby mode.

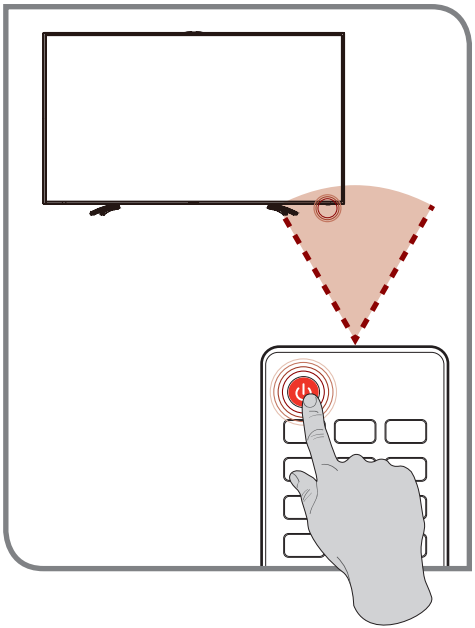

Step 5. Begin the Guided Setup

Setup Wizard

Follow the on-screen instructions to complete the first-time setup.

Menu	Operations
Language setting	• Choose your language: **English**, **Spanish** or **French** and then select **Next**. • The **Welcome** page displays and shows the available devices and interfaces.
Country setting	• Select the country where you will operate the TV.
Time zone setting	• Select the local time zone according to your region. • Daylight Saving: Set the Daylight Saving time for your area.
Use Mode	• Select your Mode Setting: Home Mode or Retail Mode. • If you select **Retail Mode**, a message appears "Are you sure to change to retail mode?". Select **OK** to continue, or select **No** to change your selection. • **Home Mode** is the recommended setting which offers full functionality of the television. If you selected **Retail Mode**, Energy Savings is not realized.

Select Network	• The Select Network: Connect your TV to access the network. • When the Network Setting menu opens, Hisense Service Terms and Conditions will appear. Press **◄/► button** to scroll through the pages. Please read it carefully. If you want to access the Internet, select the **Agree** to set your TV's network connections. Otherwise, select the **Disagree** to enter the Channel search menu. • You can setup the network configuration in this menu. For more information, please refer to the section titled "Network Connection" and "Network Setup" in the user manual online.
Channel Search	• Select your Tuner Mode: Antenna or Cable, press **ENTER button** to confirm. • Set the Channel Installation: Scan or Skip Scan. If you select **Scan**, your TV automatically starts Channel Installation available in your viewing area; If you select **Skip Scan**, your TV does not scan for channels; Depending on the reception condition, it may take up to 30 minutes or more to complete memorizing channels. Please allow the process to complete without interruption. • After the TV has completed scanning for channels, select **Go** to exit the wizard.

NOTE: If you are using a cable or satellite box and you have connected it to the TV using a coaxial cable, you should select the cable option. Be sure the cable or satellite box is turned on before starting the channel scan. If you use a cable or satellite box connected to AV, Component or HDMI, you don't need to scan for channels.

Selecting the Input Source

When you finish the first-time setup, you must select the TV signal source. Because your TV stores this information, you do not need to change the TV signal source unless it changes. For example, you change from an outside antenna to cable TV.

- Turn on your TV, then press **INPUT button** on the remote or on the TV. The INPUT menu opens.
- Press **▲/▼ button** to highlight the input source, then press **ENTER button**.

PRODUCT SPECIFICATIONS

Model Name		**75H9**
Dimension (W × H × D)	Without Stand	66.3 × 38.0 × 3.3 inches (1685 × 966 × 83 mm)
	With Stand	66.3 × 40.7 × 16.1 inches (1685 × 1033 × 410 mm)
Weight	Without Stand	105.8 lbs (48.0 kg)
	With Stand	114.6 lbs (52.0 kg)
Active Screen Size (Diagonal)		74.5 inches
Screen Resolution		1920 × 1080
Audio Power		10 W + 10 W
Power Supply		120 V ~ 60 Hz
Receiving systems	Analog	NTSC
	Digital	ATSC / QAM
Receiving Channels		VHF: 2~13 UHF: 14~69 CATV: 1 ~ 125 Digital Terrestrial Broadcast (8VSB): 2 ~ 69 Digital cable (64/256 QAM): 1 ~ 135
Tuner Type		Frequency synthesized
Environmental Conditions		Temperature: 41°F ~ 95°F (5°C ~ 35°C) Humidity: 20% ~ 80% RH Atmospheric pressure: 86 kPa ~ 106 kPa
Component Input		480 I / 60 Hz, 480 P / 60 Hz, 720 P / 60 Hz, 1080 I / 60 Hz, 1080 P / 60 Hz
VGA Input		VGA (640×480 / 60 Hz), SVGA (800×600 / 60 Hz), XGA (1024×768 / 60 Hz)
HDMI Input		RGB / 60 Hz (640×480, 800×600, 1024×768), YUV / 60 Hz (480 I, 480 P, 720 P, 1080 I, 1080 P)

QUICK PROBLEM-SOLVING TIPS

When there is something wrong with your TV, turn it off and restart it. If this does not resolve the problem you can also refer to the tips below. If the problem is still not resolved, then contact our Hisense Electronics Consumer Care Center at 1-888-935-8880 Monday through Friday from 8 A.M. to 8 P.M. EST and Saturday through Sunday from 9 A.M. to 6 P.M. EST.

ISSUES	POSSIBLE SOLUTIONS
No sound or picture	• Check if the power cord is plugged into a powered AC outlet. • A power switch on the right side bottom edge of the front panel must be turned on. Press the ⏻ **button** in the remote control to activate the unit from Standby. • Check to see if the LED light is on or not. If it is, then the TV is receiving power.
I have connected an external source to my TV and I get no picture and/or sound.	• Check for the correct output connection on the external source and for the correct input connection on the TV. • Make sure you have made the correct selection for the input mode for the incoming signal.
When I turn on my TV, there is a delay for a few seconds before the picture appears. Is this normal?	• Yes, this is normal. The TV is initializing and searching for previous setting information.
The picture is normal but there is no sound	• Check the volume settings. • Check if 'Mute' mode is set to **On**.
Sound but no picture or black and white picture	• If the picture is black and white, unplug the TV from the AC outlet and replug it after 60 seconds. • Check that the Color is set to 50 or higher. • Try different TV channels.
The sound and/or picture is distorted or appears wavy	• An electric appliance may be affecting the TV. Turn off any appliances that are nearby and move it farther away from the TV. • Insert the power plug of the TV set into another power outlet.
The sound and picture is blurry or cuts out	• If using an external antenna, check the direction, position and connection of the antenna. • Adjust the direction of your antenna or reset or fine tune the channel.
A horizontal or vertical stripe appears on the picture and/or the picture is shaking	• Check is there is a source (such as an appliance or electric tool) nearby that is causing interference.
The plastic cabinet makes a "clicking" type of sound	• The 'click' sound can occur when the temperature of the television changes. This change causes the television cabinet to expand or contract, which makes the sound. This is normal and the TV is OK.
The remote control does not work	• Confirm that TV still has power and is operational. • Change the batteries in the remote control. • Check if the batteries are correctly installed.

Certification and Compliance

FCC Notice

This device has been tested and found to comply with the limits for a Class B digital device pursuant to Part 15 of the FCC Rules. These limits are designed to provide reasonable protection against harmful interference in a residential installation. This device generates, uses, and can radiate radio frequency energy and, if not installed and used in accordance with the instructions, may cause harmful interference to radio communications.

However, there is no guarantee that interference will not occur in a particular installation. If this device does cause harmful interference to radio or television reception, which can be determined by turning the device off and on, the user is encouraged to try to correct the interference by one or more of the following measures:

- Reorient or relocate the receiving antenna.
- Increase the separation between the device and receiver.
- Connect the device into an outlet on a circuit different from that to which the receiver is connected.
- Consult the dealer or an experienced radio/TV technician for help.

NOTE: The manufacturer is not responsible for any radio or TV interference caused by unauthorized modifications to this equipment. Such modifications could void the user's authority to operate the equipment.

The WiFi Module complies with FCC radiation exposure limits set forth for an uncontrolled environment. This device should be installed and operated with a minimum distance of 20 centimeters between the radiator and your body.

The terms HDMI and HDMI High-Definition Multimedia Interface, and the HDMI Logo are trademarks or registered trademarks of HDMI Licensing LLC in the United States and other countries.

Manufactured under license from Dolby Laboratories. Dolby and the double-D symbol are trademarks of Dolby Laboratories.

©2014. All rights reserved. Hisense and the Hisense logo are registered trademarks of Hisense. Other brand and product names are registered trademarks of their respective owners.