ES-G1612C8-1

SHARP

Model LC-50N3100U

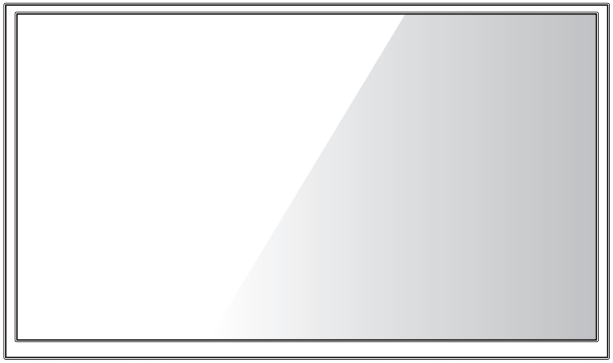

Quick Start Guide

Help SHARP improve the environment by reducing paper waste.
For detailed instructions and feature descriptions, access the full User Manual online.

© 2016 Hisense Company Ltd. All Rights Reserved.

All material in this Quick Start Guide is the property of Hisense Company Ltd. and its subsidiaries, and is protected under US and International copyright and/or other intellectual property laws. Reproduction or transmission of the materials, in whole or in part, in any manner, electronic, print, or otherwise, without the prior written consent of Hisense Company Ltd., is a violation of Hisense Company Ltd. rights under the aforementioned laws.

No part of this publication may be stored, reproduced, transmitted or distributed, in whole or in part, in any manner, electronic or otherwise, whether or not for a charge or other or no consideration, without the prior written permission of Hisense Company Ltd. Requests for permission to store, reproduce, transmit or distribute materials may be made in writing to the following address:

USA: Hisense USA Corporation
PO Box 3289
Suwanee, GA 30024

CANADA: Hisense Canada Co., Ltd,
405 Britannia Rd E., Suite 11
Mississauga, Ontario,L4Z 3E6

MEXICO: Hisense Mexico S de RL de CV
Boulevard Miguel de Cervantes Saavedra No. 301, Torre Norte, Piso 2,
Colonia Ampliación Granada, C.P. 11520, en México Distrito Federal.

“Sharp™”, “Aquos™”, “Quattron™” and any and all other Sharp product names, logo’s, slogans or marks are registered trademarks owned exclusively by Sharp Corporation.

"Hisense™", and any and all other Hisense product names, logo’s, slogans or marks are registered trademarks and intellectual property rights of Hisense Company Ltd. and its subsidiaries.

This product is sold to you under one or more license agreements between Sharp Corporation and Hisense International (Hong Kong) America Investment Co. Ltd. All other trademarks are the property of their respective holders.

Enjoy TV in a Super Simple and Super Unique Way!

LED TV with Popular Features

- LED backlight that offers better brightness and contrast
- Energy-efficient design to reduce your utility bill
- HiMedia Digital Media Player to play back digital content from your USB drive
- 1080p picture resolution

Multiple Connection Methods

- 1 Digital Audio Out port
- 1 USB Connector
- 2 HDMI Connectors
- RF Antenna connector
- Component ports
- Composite ports
- 1 Headphone jack
- 1 DVI Audio In port

High-Quality Picture and Sound

- Vibrant contrast and brightness to display images accurately
- Crisp sound and powerful TV speaker output
- 1080p full high definition (FHD) resolution

Easy Setup Menu and Simple Design

- Short and easy-to-follow first-time setup menu
- Simple user interface (UI) design to navigate the TV screens
- Descriptive features to help make your selections

Register Your TV!

Congratulations on the purchase of your new SHARP TV! This Quick Start Guide will walk you through a few easy steps to set up your TV. For detailed instructions, access the User Manual on the support pages listed below.

Because we value your business, we want to keep you in the know of 'all things SHARP'. Using your mobile phone, scan the Registration page QR code to register your TV. Depending on the make and model of your phone, you may need to download a QR code scanning app.

Country	Customer Care Center	SHARP Support Page	REGISTER YOUR TV
U.S.A	• **Phone:** 1-888-935-8880 • **Hours of Operation:** Monday - Friday: 9 AM to 9 PM EST Saturday - Sunday: 9 AM to 6 PM EST • **Service Email:** support@sharptvusa.com	http:// www.sharptvusa.com /support	www.sharptvusa.com/ support/productreg.asp
CANADA	• **Phone:** 1-855-271-6271 • **Hours of Operation:** Monday - Friday: 8 AM to 8 PM EST • **Service Email:** Canadasupport@sharp-canada.ca	http://www.sharp-canada. ca/support/	No need to register
MEXICO	• **Phone:** 01-800-999-7277 • **Hours of Operation:** Monday-Friday 9:00-18:00 • **Service Email:** servicio@SHARPTV.com.mx	http://www.SHARPTV.com. mx/support/	http://www.SHARPTV. com.mx/support/product Reg.asp

Disclaimer: *This Quick Start Guide is intended as a general guideline to help you set up your SHARP TV. Images throughout this document are for illustrative purposes only and may differ from the actual product.*

Packaged contents

Your package in which you purchased your new TV contains the following items:

- TV
- Remote Control
- A/C power cord
- *Important Safety Information and Warranty Card leaflet*
- A left and right leg that forms the TV stand
- 2 AAA batteries
- *Quick Start Guide (this document)*
- 4 screws (M4×20)

IMPORTANT:

To prevent accidentally discarding items that came with your TV, be sure to **check ALL of the foam** in the carton box.

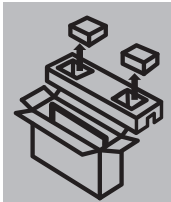

- Please check foam for accessories before discarding.
- Veuillez vérifier la mousse pour qu'il n'y ait pas d'accessoires avant de la jeter.
- Antes de desechar la espuma, asegúrese de retirar todos los accesorios.

Required tools and devices

- Phillips screwdriver (not included) to secure the TV stand
- HDMI and other types of cables (not included) to connect external devices to the TV
- Wall mount bracket (not included) if you prefer to mount the TV to the wall

BUTTONS AND PORTS ON THE TV

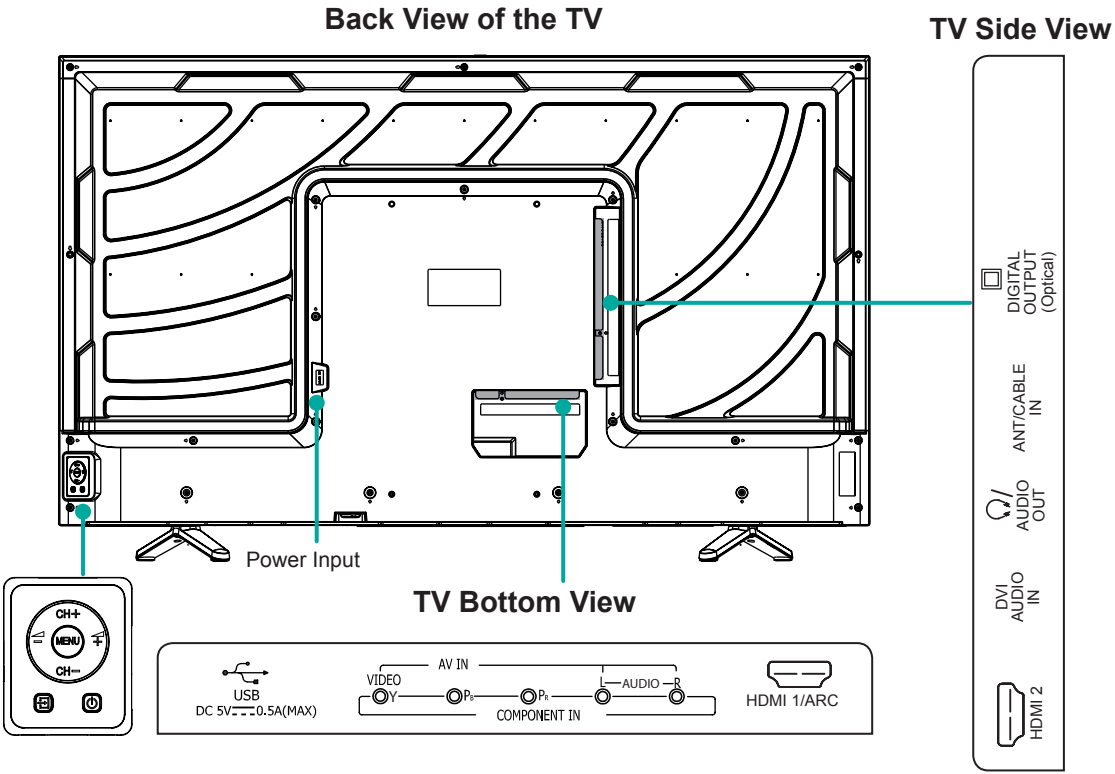

STEP 1. Attach the TV stand or wall mount bracket (not included)

Attach the TV Stand (For steps to attach the wall mount see page 6)

CAUTION:

- Be sure to disconnect the A/C power cord before installing a stand or Wall-Mount brackets.
- The LED display is very fragile and must be protected at all times when installing the legs that form the stand. Be sure to protect the TV screen from getting scratched or damaged by any hard objects. In addition, DO NOT exert pressure on the front of the TV at any time because it could crack.

To attach the left and right leg that forms the stand:

1. Carefully place your TV face down on a soft, flat surface to prevent damage to the TV or scratching to the screen.
2. Remove the 2 legs from the foam and then insert the stands into the bottom slots of the TV.
3. Use the screws that came inside the carton with your TV to secure each leg tightly.

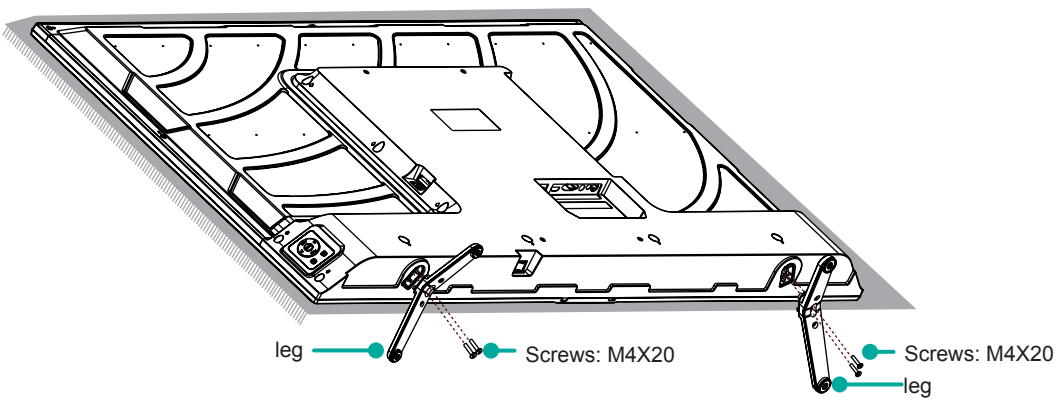

Attach the Wall Mount Bracket (not included)

Before you begin the third-party manufacturer instructions, be sure to do the following things:

1. Place the TV face down on a clean, safe and cushioned surface.
2. Remove the TV stand if you already attached it.
3. Place the spacers (not included) in the corresponding bracket holes.

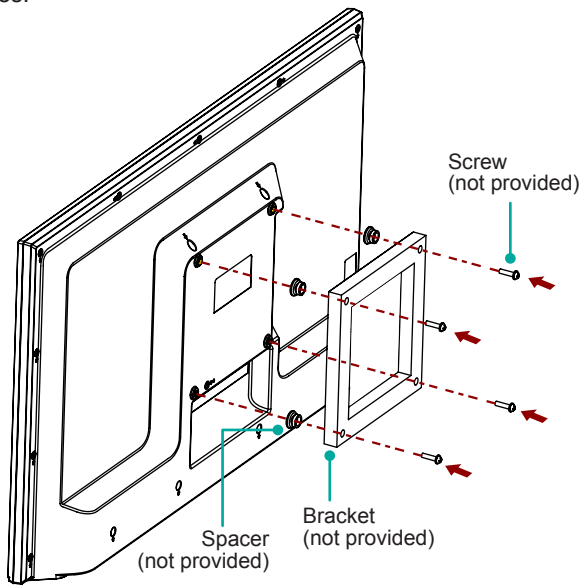

CAUTION:

- **When you attach the mount, be sure to use the spacers (provided by the third-party manufacturer) between the TV and the bracket.**
- **To prevent internal damage to the TV and ensure it is mounted securely, be sure to use fixing screws (not provided) that are 9.5 - 11.5 mm in length when measured from the attaching surface of rear cover.**

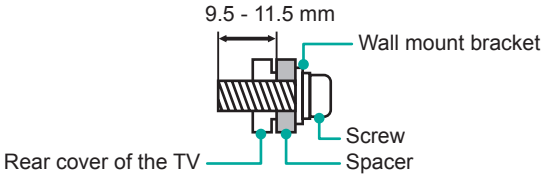

Wall mount hole pattern VESA (mm)	200 × 400
Wall mount screw size (mm)	M6 × 25

Follow instructions provided with the Wall mount bracket.

- To complete the installation, please contact the wall-mount manufacturer.
- The selected screws are 9.5 - 11.5 mm in length when measured from the attaching surface of the rear cover. The length of the screws differ depending on the Wall mount bracket model.

NOTE: The length of the screws differ depending on the wall mount bracket model.

STEP 2. Connect devices to your TV

Check to ensure that you have selected the right cables for the ports and that they are connected securely. Loose connections can affect the quality of the picture image and color.

TV label		Port	Cable	External Equipment	Brief Description
ANT/CABLE IN				Antenna; VHF/UHF Antenna; Cable; ANT OUT	Connect an outdoor VHF/UHF antenna.
HDMI				VCR; DVD Player/Recorder; Video Camera; Set-top Box; Satellite antenna cable; Satellite Receiver	Connect a High Definition Multimedia Interface (HDMI) cable from an external device.
COMPO-NENT IN	Y		Green		Connect a component video cable and left-right audio cables from an external AV device.
	P_B		Blue		
	P_R		Red		
	L		White		
	R		Red		
AV IN	VIDEO		Yellow		Connect a composite video cable and left-right audio cables from an external AV device.
	L		White		
	R		Red		
PC IN	HDMI			PC	Connect a HDMI cable from your PC to use the TV as a monitor. Connect an audio cable from the PC audio out.
	DVI AUDIO IN				

TV label	Port	Cable	External Equipment	Brief Description
DIGITAL OUTPUT			Audio Amplifier Speaker	Connect an optical cable from an external digital audio system.
🎧 / AUDIO OUT				Connect headphones to hear audio from the TV.
		White Red	Speaker Audio Amplifier	Connect an audio adapter (not provided) from an external analog audio system.
USB DC 5V ⎓ 0.5A(MAX)				Connect a USB device for browsing photos and movies. The unit only recognizes a USB Memory Stick.

Buttons on your TV remote

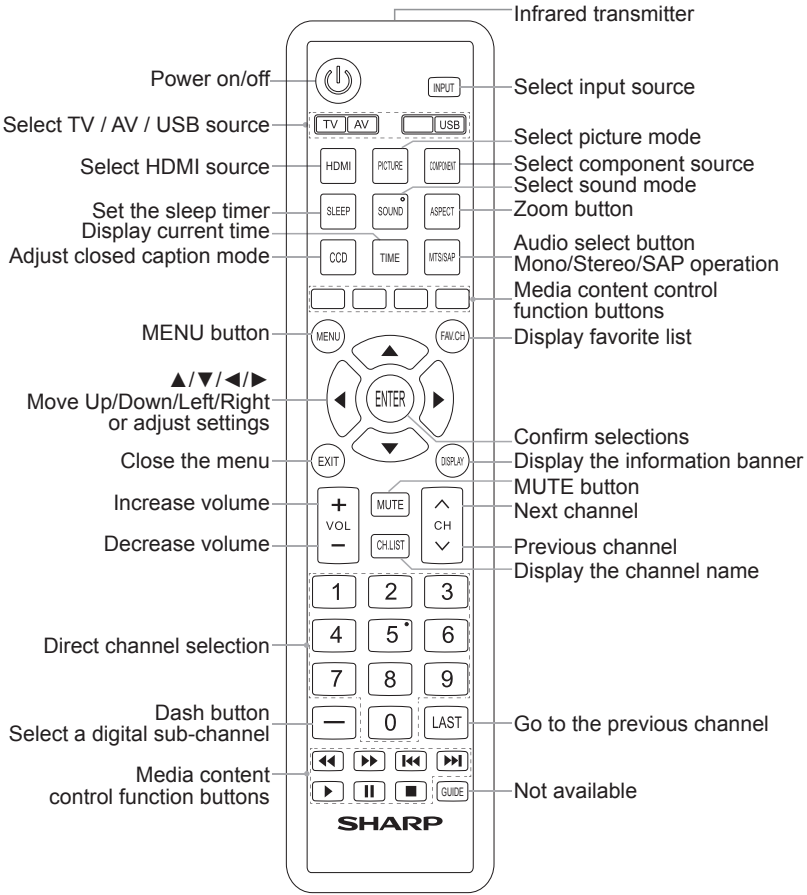

STEP 3. Begin using your remote

1. Slide the back cover to open the battery compartment of the remote control.

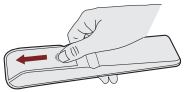

Gently push and slide

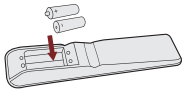

Insert the batteries

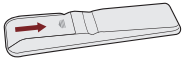

Gently push and slide

2. Insert two AAA size batteries. Make sure to match the (+) and (-) ends of the batteries with the (+) and (-) ends indicated in the battery compartment.
3. Replace the battery compartment cover.

Important Information about the remote and batteries:

- **Discard batteries in a designated disposal area. Do not throw them into a fire.**
- **Remove old batteries immediately to prevent them from leaking into the battery compartment.**
- **If you do not intend to use the remote control for a long time, remove the batteries.**
- **Battery chemicals can cause a rash. If the batteries leak, clean the battery compartment with a cloth. If chemicals touch your skin then wash it immediately.**
- **Do not mix old and new batteries.**
- **Do not mix alkaline, standard (carbon-zinc) or rechargeable (NiCd, NiMH, etc.) batteries.**
- **Do not continue using the remote if it gets warm or hot.**

  Call our Support Center immediately on the SHARP support website.

Remote Control Range Information

- The remote control can work at a distance of up to 26 feet in front of the TV set.
- It can work at a 30 degree horizontal or vertical angle.

Program Your Universal Cable or Satellite Remote Control to Operate Your New SHARP Television (only for USA)

If you would like to program your other household remote controls to your new SHARP television,please refer to the User's Manual supplied by your Cable or Satellite provider. The Cable or Satellite providers' User's Manuals should include instructions on how to program their remote to your television.

A list of SHARP codes for the most common Cable and Satellite providers are listed below. Use the SHARP code that is associated with your Cable or Satellite provider (if applicable).

DIRECTV.....0178, 10178, 10019, 10748, 11314, 11660, 11710, 11780, 12049, 10171, 11204, 11326, 11517, 11564, 11641, 11963, 12002, 12183

Time Warner Cable.....386, 0178, 10178, 400, 450, 461, 456, 0748, 1463, 0463, 10463

Comcast.....0178, 10178, 10463, 11463, 10748, 11314, 11660, 10171, 11204, 11326, 11517, 11641, 11780, 11785, 11892, 11963, 12002

Cox Communications.....0178, 10178, 1326, 1463

Dish Network.....505, 627, 538, 720, 659

If the SHARP code associated with your Cable or Satellite provider is not listed, does not work or you cannot locate the instructions to program your remote, call your local Cable or Satellite provider's customer service center.

If your Cable or Satellite provider does not have a SHARP code available, please contact us at one of the phone numbers on Page 2.

Using Your Cable Set-top Box or Satellite Receiver Remote as a 'Universal' Remote

If you prefer to use your Cable Set-top Box or Satellite Receiver Remote as a 'Universal Remote', then visit the **Support** page of the SHARP USA website to view a list of the codes.

STEP 4. Power on the TV

Plug one end of the power cord into the AC INPUT connector on the back of your TV and the other end into a power outlet.

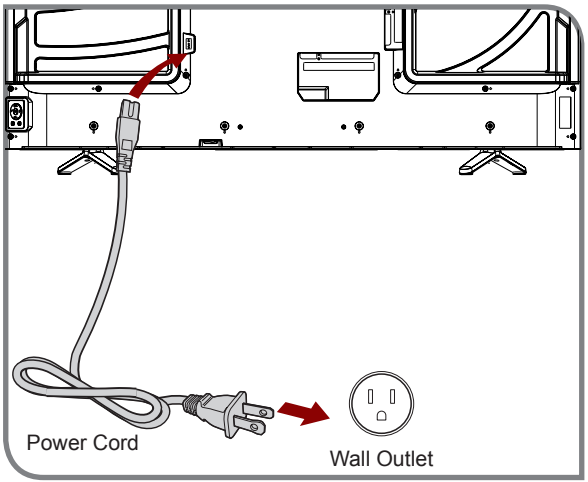

Press the **Power button** ⏻ on the remote to turn on the TV. A splash screen that shows the SHARP logo appears. Next, the First-Time Setup Menu begins by prompting you to choose your **Language**, **Country**, and **Time Zone**.

STEP 5. Complete the first-time setup menu

After the splash screen that shows the SHARP logo appears, begin the first-time setup menu.

Menu	Operations
Language setting	• Choose your language: **English**, **Español or Français** and then press the **ENTER button** to confirm.
Time zone setting	• Select the local time zone according to your region. If Auto selected, the options of Daylight Savings/Year/ Month/Day/Time are not available. • Daylight Saving: Set the Daylight Savings time for your area.
Use Mode	• Select your Mode Setting: Home Mode or Retail Mode. • **Home Mode** is the recommended setting which offers full functionality of the television. If you selected **Retail Mode**, a message appears “Are you sure you want retail mode?" Select "Yes" to continue, or select "No" to change your selection.
Channel Search	• Select the Tuner Mode: Antenna or Cable and then press the [Enter] button to confirm. • Your TV will begin to display channels that are available for your area.

STEP 6. Selecting the Input Source

When you finish the first-time setup menu, you must select the TV signal source. Because your TV stores this information, you do not need to change the TV signal source unless it changes. For example, if you begin receiving channels from a cable provider instead of an antenna, then you'll need to change the TV signal source.

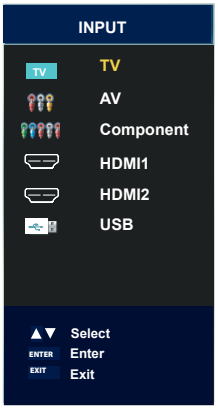

- Turn on your TV, then press **INPUT button** on the remote or on the TV. The INPUT menu opens.
- Press **▲/▼ button** to highlight the input source, then press **ENTER button**.

Disclaimer: *Subscriptions or other payments may be required to access content through some applications. Some or all of the included or downloaded application services in this Sharp, Aquos or Quattron device may not function depending on the Internet connection, local limitations of included applications or other reasons outside of the Licensor's or Manufacturers control. ALL LICENSORS AND THE MANUFACTURER EXPRESSLY DISCLAIM RESPONSIBILITY FOR ANY APPLICATION SERVICE FROM FUNCTIONING AT ANY TIME, FOR CONTENT IN ANY APPLICATION SERVICE, FOR DISRUPTIONS OF SERVICE, LOCAL OR REGIONAL LIMITATIONS, WARRANTIES OF TITLE, NO INFRINGEMENT, AND FOR IMPLIED WARRANTIES OF MERCHANTABILITY OR FITNESS FOR A PARTICULAR PURPOSE. By purchasing this device, you accept such Disclaimer without any claim on any Licensor and/or the Manufacturer at any time and in any territory.*

PRODUCT SPECIFICATIONS

Model Name		**LC-50N3100U**
Dimension (W × H × D)	Without Stand	44.1 × 25.5 × 3.1 inches (1119 × 648 × 80 mm)
	With Stand	44.1 × 27.5 × 9.6 inches (1119 × 698 × 245 mm)
Weight	Without Stand	26.5 lbs (12 kg)
	With Stand	28.2 lbs (12.8 kg)
Active Screen Size (Diagonal)		49.5 inches
Screen Resolution		1920 × 1080
Audio Power		10 W + 10 W
Power consumption		110 W
Power Supply		120 V ~ 60 Hz
Receiving systems	Analog	NTSC
	Digital	ATSC / QAM
Receiving Channels		VHF: 2~13 UHF: 14~69 CATV: 1 ~ 125 Digital Terrestrial Broadcast (8VSB): 2 ~ 69 Digital cable (64/256 QAM): 1 ~ 135
Tuner Type		Frequency synthesized
Environmental Conditions		Temperature: 41°F ~ 95°F (5°C ~ 35°C) Humidity: 20% ~ 80% RH Atmospheric pressure: 86 kPa ~ 106 kPa
Component Input		480 I / 60 Hz, 480 P / 60 Hz, 720 P / 60 Hz, 1080 I / 60 Hz, 1080 P / 60 Hz
HDMI Input		RGB / 60 Hz (640×480, 800×600, 1024×768), YUV / 60 Hz (480 I, 480 P, 720 P, 1080 I, 1080 P)
Ports		2 HDMI ports, 1 USB port, 1 RF input, 1 RCA composite combine with component Video input, 1 left/right Audio input for composite, 1 Digital Audio output,1 Earphone Audio output, 1 DVI Audio input
Key features		LED Backlight, Digital Media Player, 1080P, Narrow Frame

QUICK PROBLEM-SOLVING TIPS

When you experience an issue with your TV, turn it off and on again. If this does not resolve the problem, then refer to the tips below. If the problem is still not resolved, then contact us at one of the phone numbers on Page 2.

ISSUES	POSSIBLE SOLUTIONS
No sound or picture	• Check if the power cord is plugged into a powered AC outlet. • Press the ⏻ **Power button** on the remote control to activate the unit from 'Standby' mode. • Check to see if the LED light is on or not. If it is, then the TV is receiving power.
I have connected an external source to my TV and I get no picture and/or sound.	• Check for the correct output connection on the external source and for the correct input connection on the TV. • Make sure you have made the correct selection for the input mode for the incoming signal.
When I turn on my TV, there is a delay for a few seconds before the picture appears. Is this normal?	• Yes, this is normal. The TV is initializing and searching for previous setting information.
The picture is normal but there is no sound	• Check the volume settings. • Check if 'Mute' mode is set to **On**.
Sound but no picture or black and white picture	• If the picture is black and white, unplug the TV from the AC outlet and replug it after 60 seconds. • Check that the Color is set to 50 or higher. • Try different TV channels.
The sound and/or picture is distorted or appears wavy	• An electric appliance may be affecting the TV. Turn off any appliances that are nearby and move it farther away from the TV. • Insert the power plug of the TV set into another power outlet.
The sound and picture is blurry or cuts out	• If using an external antenna, check the direction, position and connection of the antenna. • Adjust the direction of your antenna or reset or fine tune the channel.
A horizontal or vertical stripe appears on the picture and/or the picture is shaking	• Check if there is an appliance or electric tool nearby that is causing interference.

The plastic cabinet makes a "clicking" type of sound	• The 'click' sound can occur when the temperature of the television changes. This change causes the television cabinet to expand or contract, which makes the sound. This is normal and the TV is OK.
The remote control does not work	• Confirm that TV still has power and is operational. • Change the batteries in the remote control. • Check if the batteries are correctly installed.

Need more help?

Additional help is available online at support links on Page 2. You will find answers to frequently asked questions, downloadable firmware and more.

Certification and Compliance

FCC Notice

This device has been tested and found to comply with the limits for a Class B digital device pursuant to Part 15 of the FCC Rules. These limits are designed to provide reasonable protection against harmful interference in a residential installation. This device generates, uses, and can radiate radio frequency energy and, if not installed and used in accordance with the instructions, may cause harmful interference to radio communications.

However, there is no guarantee that interference will not occur in a particular installation. If this device does cause harmful interference to radio or television reception, which can be determined by turning the device off and on, the user is encouraged to try to correct the interference by one or more of the following measures:

- Reorient or relocate the receiving antenna.
- Increase the separation between the device and receiver.
- Connect the device into an outlet on a circuit different from that to which the receiver is connected.
- Consult the dealer or an experienced radio/TV technician for help.

NOTE: The manufacturer is not responsible for any radio or TV interference caused by unauthorized modifications to this equipment. Such modifications could void the user's authority to operate the equipment.

The terms HDMI and HDMI High-Definition Multimedia Interface, and the HDMI Logo are trademarks or registered trademarks of HDMI Licensing LLC in the United States and other countries.

©2016. All rights reserved. SHARP and the SHARP logo are registered trademarks of SHARP. Other brand and product names are registered trademarks of their respective owners.