ES-

SHARP®

Model LC-55U

4K Smart TV

Quick Start Guide

Help SHARP improve the environment by reducing paper waste.
For detailed instructions and feature descriptions, access the full User Manual online.

© 2016 Hisense Company Ltd. All Rights Reserved.

All material in this Quick Start Guide is the property of Hisense Company Ltd. and its subsidiaries, and is protected under US and International copyright and/or other intellectual property laws. Reproduction or transmission of the materials, in whole or in part, in any manner, electronic, print, or otherwise, without the prior written consent of Hisense Company Ltd., is a violation of Hisense Company Ltd. rights under the aforementioned laws.

No part of this publication may be stored, reproduced, transmitted or distributed, in whole or in part, in any manner, electronic or otherwise, whether or not for a charge or other or no consideration, without the prior written permission of Hisense Company Ltd. Requests for permission to store, reproduce, transmit or distribute materials may be made in writing to the following address:
USA: Hisense USA Corporation
PO Box 3289
Suwanee, GA 30024
CANADA: Hisense Canada Co., Ltd,
405 Britannia Rd E., Suite 11
Mississauga, Ontario,L4Z 3E6
MEXICO: Hisense Mexico S de RL de CV
Boulevard Miguel de Cervantes Saavedra No. 301, Torre Norte, Piso 2,
Colonia Ampliación Granada, C.P. 11520, en México Distrito Federal.
“Sharp™”, “Aquos™”, “Quattron™” and any and all other Sharp product names, logo’s, slogans or marks are registered trademarks owned exclusively by Sharp Corporation.

"Hisense™", and any and all other Hisense product names, logo’s, slogans or marks are registered trademarks and intellectual property rights of Hisense Company Ltd. and its subsidiaries.

This product is sold to you under one or more license agreements between Sharp Corporation and Hisense International (Hong Kong) America Investment Co. Ltd. All other trademarks are the property of their respective holders.

4K Smart TV: An unforgettable entertainment experience

Smart LED TV with Popular Features

- Ultra-fast access to launch Netflix®
- Numerous built-in social media, gaming and movie apps
- Thousands of movie titles and streaming content to view
- 4K Media Player and Receiver
- App Store and Web Browser
- Many other cool features

Multiple Connection Methods

- Built-in wireless connection
- 2 USB Connectors (1 USB 2.0 Connectors and 1 USB 3.0 Connector)
- 4 HDMI Connectors (2 HDMI 1.4 Connectors and 2 HDMI 2.0 Connectors)
- 1 LAN (Ethernet) port
- 1 RS232 port
- 1 VGA port

High-Quality Picture and Sound

- Vibrant contrast and brightness to display images accurately
- dbx-tv® Award-winning sound
- 4K technology that supports 4K online streaming, 4K USB content, HDMI 2.0 devices and much more to maximize your entertainment experience
- AquoMotion™

Easy Setup Menu and Simple Design

- Short and easy-to-follow first-time setup menu
- With a simple user interface (UI) design to navigate
- Descriptive features to help make your selections

Register Your TV!

Congratulations on the purchase of your new SHARP 4K Smart TV! This Quick Start Guide will walk you through a few easy steps to set up your TV. For detailed instructions, access the User Manual on the support pages listed below.

Because we value your business, we want to keep you in the know of 'all things SHARP'. Using your mobile phone, scan the Registration page QR code to register your TV. Depending on the make and model of your phone, you may need to download a QR code scanning app.

Country	Customer Care Center	SHARP Support Page	REGISTER YOUR TV
U.S.A	• **Phone:** 1-888-935-8880 • **Hours of Operation:** Monday - Friday: 9 AM to 9 PM EST Saturday - Sunday: 9 AM to 6 PM EST • **Service Email:** support@sharptvusa.com	http:// www.sharptvusa.com /support	www.sharptvusa.com/ support/productreg.asp
CANADA	• **Phone:** 1-855-271-6271 • **Hours of Operation:** Monday - Friday: 8 AM to 8 PM EST • **Service Email:** Canadasupport@sharp-canada.ca	http://www.sharp-canada. ca/support/	No need to register
MEXICO	• **Phone:** 01-800-999-7277 • **Hours of Operation:** Monday-Friday 09:00-18:00 • **Service Email:** servicio@SHARPTV.com.mx	http://www.SHARPTV.com. mx/support/	http://www.SHARPTV. com.mx/support/product Reg.asp

Disclaimer: *This Quick Start Guide is intended as a general guideline to help you set up your SHARP TV. Images throughout this document are for illustrative purposes only and may differ from the actual product.*

PACKAGED CONTENTS

Your package in which you purchased your new TV contains the following items:

- TV
- 2 base stands
- Remote Control
- 1 set of AAA batteries
- Quick Start Guide (this document)
- 4 screws (M4×20)
- Power Cord
- Important Safety Information and Warranty Card

IMPORTANT:

To prevent accidentally discarding items that came with your TV, be sure to **check ALL of the foam** in the carton box.

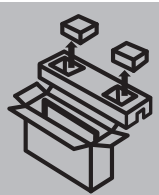

· Please check foam for accessories before discarding.
· Veuillez vérifier la mousse pour qu'il n'y ait pas d'accessoires avant de la jeter.
· Antes de desechar la espuma, asegúrese de retirar todos los accesorios.

Required tools and devices

- Wireless router (not included) for Internet connectivity
- Phillips screwdriver (not included) to secure the TV stand
- HDMI and other types of cables (not included) to connect external devices to the TV
- Wall mount bracket (not included) if you prefer to mount the TV to the wall

BUTTONS AND PORTS ON THE TV

Back View of the TV

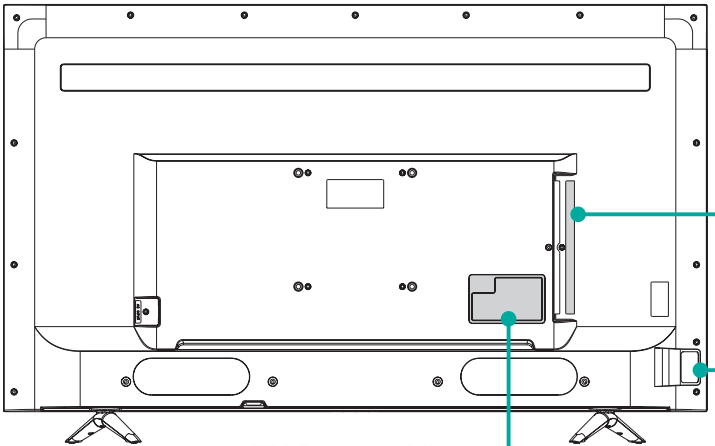

TV Bottom Panel

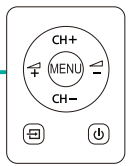

TV Side View

TV Bottom View

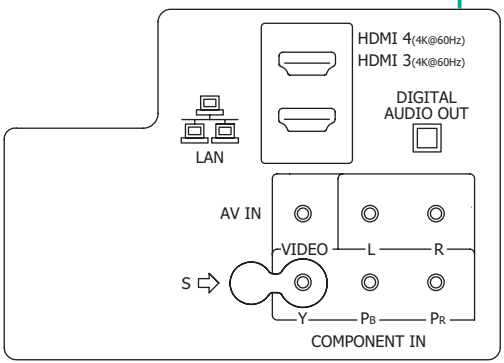

STEP 1. Attach the TV Stand or Wall Mount Bracket

Attach the TV Stand

Follow the illustrations and instructions below to complete the installation steps:

1. Carefully place your TV facedown on a soft, flat surface to prevent damage to the TV or scratching to the screen.
2. Remove the 2 stands from the accessory bag and then insert the stands into the bottom slots of the TV.
3. Use the 4 screws in the accessory bag to secure the BASE STAND to the TV.

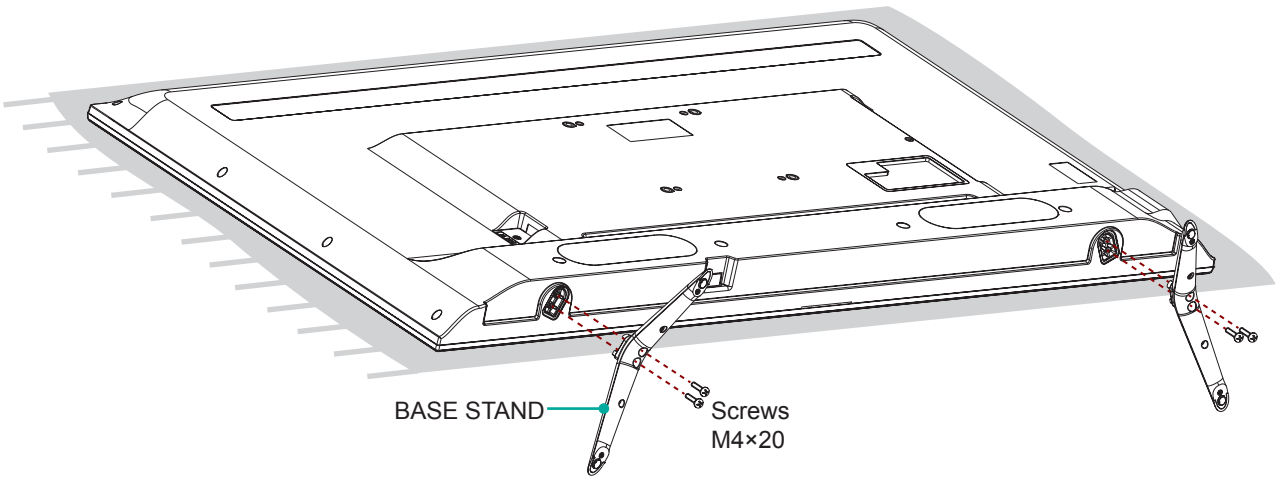

Attach the Wall Mount Bracket (not included)

Before you begin the third-party manufacturer instructions, be sure to do the following things:

1.Place the TV face down on a clean, safe and cushioned surface.

2.Remove the TV stand if you already attached it.

3.Place the spacers (not included) in the corresponding bracket holes.

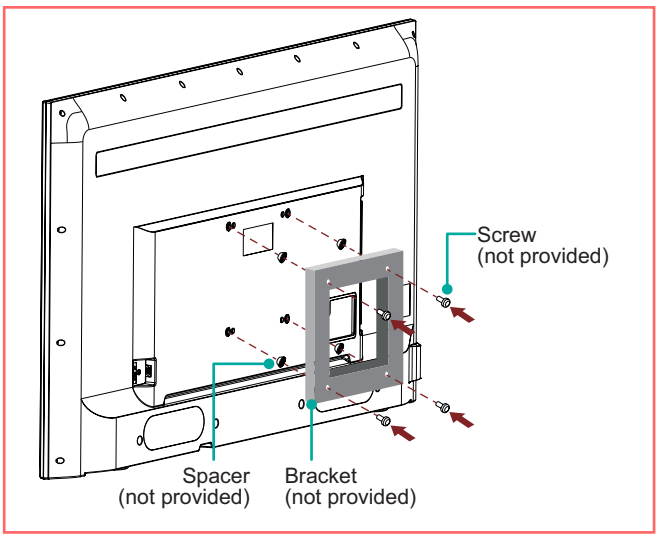

CAUTION:

- **When you attach the mount, be sure to use the spacers (provided by the third-party manufacturer) between the TV and the bracket.**
- **To prevent internal damage to the TV and ensure it is mounted securely, be sure to use fixing screws (not provided) that are 9.5 - 11.5 mm in length when measured from the attaching surface of the mounting hook.**

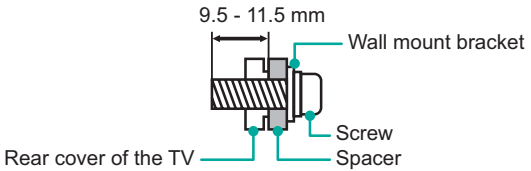

Wall mount hole pattern VESA (mm)	200 × 200
Wall mount screw size (mm)	M6

Follow instructions provided with the Wall mount bracket.

- To complete the installation, please contact the wall-mount manufacturer or the retailer from which you purchased the TV.
- The selected screws are 9.5 - 11.5 mm in length when measured from the attaching surface of the rear cover.

NOTE: The diameter and length of the screws differ depending on the wall mount bracket model.

STEP 2. Connect devices to your TV

Check to ensure that you have selected the right cables for the ports and that they are connected securely. Loose connections can affect the quality of the picture image and color.

TV label		Port	Cable	External Equipment	Brief Description
ANT/CABLE				Antenna VHF/UHF Antenna Cable ANT OUT	Connect an outdoor VHF/UHF antenna.
HDMI				VCR DVD Player/Recorder Video Camera Set-top Box Satellite antenna cable Satellite Receiver	This 4K TV has two different software versions of HDMI ports to connect HDMI-enabled devices. The two high-powered HDMI version 2.0(HDMI 3, HDMI 4) inputs enable you to connect 4K Ultra-HD external devices that require more bandwidth to transmit to the TV screen. For example, if you have an X-box or Blu-ray player that supports the 2.0 standard. The two HDMI version 1.4 inputs are great for any of your external devices that support a standard full high-definition resolution of 1080p.
COMPO-NENT IN	Y		Green		Connect a component video cable and left-right audio cables from an external AV device.
	P_B		Blue		
	P_R		Red		
	L		White		
	R		Red		
AV IN	VIDEO		Yellow		Connect a composite video cable and left-right audio cables from an external AV device.
	L		White		
	R		Red		

TV label	Port	Cable	External Equipment	Brief Description
DIGITAL AUDIO OUT			Audio Amplifier Speaker	Connect an optical cable from an external digital audio system.
AUDIO OUT/				Connect headphones to hear audio from the TV.
		White Red	Speaker Audio Amplifier	Connect an audio adapter (not provided) from an external analog audio system.
USB				Connect a USB 3.0 device to transfer photos, music and movies to your TV at a rate that's 10 times faster than the USB 2.0 port NOTE: You can still plug a USB 2.0 device into a USB 3.0 port; however, the rate of speed will not be as fast. USB 3.0 devices are also back-wards compatible with USB 2.0 ports.
LAN			LAN	Connect an Ethernet cable to access a network or the Internet. The TV also has a wireless connectivity feature.
VGA				Connect a VGA cable from the PC.
RS232				Connect a RS232 cable from the PC.
SERVICE		This port is not available for you to connect an external device. It can only be used by our factory for testing purposes.		

STEP 3. Establish a network connection

1.Press the **Gear** button on the remote control and then press **>** to enter the **Settings** menu.
2.Select **Network** → **Network Configuration**.

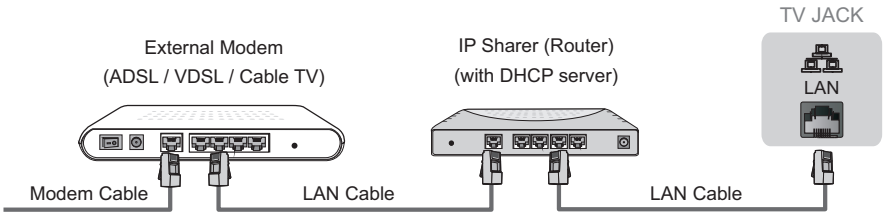

Establish a wired network connection

Automatically obtain an IP address

1.Select **Ethernet**. The TV will automatically obtain an IP address and connect to the network.
NOTE: The default option of IP Setting Mode is DHCP.
2.If the connection fails then "**Disconnected**" will display for the Ethernet status. Retry or select **Manual** to input the information again.

Manually enter the IP address

1.Select **Manual**.
2.Enter the IP Address, Subnet Mask, Gateway, Preferred DNS and Alternative DNS in the menu.