Hisense

USER MANUAL

Before using the TV, please read this manual thoroughly and retain it for future reference.

ENGLISH

FRANÇAIS

ESPAÑOL

ES-G165OB2

Hisense

USER MANUAL

Before using the TV, please read this manual thoroughly and retain it for future reference.

ENGLISH

Copyright Statement

© 2017 Hisense Company Ltd. All Rights Reserved.

All material in this User Manual is the property of Hisense Company Ltd. and its subsidiaries, and is protected under US, CANADA, MEXICO and International copyright and/or other intellectual property laws. Reproduction or transmission of the materials, in whole or in part, in any manner, electronic, print, or otherwise, without the prior written consent of Hisense Company Ltd. is a violation of Hisense Company Ltd. rights under the aforementioned laws.

No part of this publication may be stored, reproduced, transmitted or distributed, in whole or in part, in any manner, electronic or otherwise, whether or not for a charge or other or no consideration, without the prior written permission of Hisense Company Ltd.

Requests for permission to store, reproduce, transmit or distribute materials may be made to one of the following addresses:

USA: Hisense USA Corporation
PO Box 3289
Suwanee, GA 30024

CANADA: Hisense Canada Co., Ltd
2283 Argentia Road, Unit 16
Mississauga, ON, Canada
L5N 5Z2

MEXICO: Hisense Mexico S. de R.L. de C.V.
Blvd. Miguel de Cervantes Saavedra No 301
Torre Norte Piso 2, Col. Ampliación Granada
Miguel Hidalgo, Ciudad de México, C.P. 11520

Hisense, and any and all other Hisense product names, logo's, slogans or marks are registered trademarks of Hisense Company Ltd. and its subsidiaries. All other trademarks are the property of their respective holders.

©2017. All rights reserved. Hisense and the Hisense logo are registered trademarks of Hisense. Other brand and product names are registered trademarks of their respective owners.

Disclaimer Page

**Notwithstanding anything to the contrary, including in any or all descriptions, representations, statements or other communications related to this Hisense device (hereinafter “Device”) made in any form whatsoever and at any time, some or all of the pre-installed, or subsequently installed Application Services may not be available or capable of functioning as intended by the provider of the Application Services in any or all usage areas for reasons outside of Hisense’s control, including but not limited to, Internet access, local service limitations, etc. Any purchase or use of the Device, including any Application Services, is purely at the user’s risk. Application Services are provided on an as-available basis without warranties of any kind, either expressed or implied, that the Application Service will be uninterrupted or error-free, including but not limited to vagaries of weather, disruption of Service, acts of God, warranties of title, local or regional limitations, no infringement, NOR IMPLIED WARRANTIES OF MERCHANTABILITY OR FITNESS FOR A PARTICULAR PURPOSE. No advice or information given by Hisense, providers, affiliates, or contractors or their respective employees shall create such a warranty. Hisense specifically disclaims responsibility for any or all Application Services from functioning at any time, and by purchasing the Device, you accept such disclaimer without any claim on Hisense. You are solely responsible for providing an active and working connection to the Internet, along with any and all hardware and/or software necessary to use the Hisense Device as intended.

Disclaimer:
Images throughout this document are for illustrative purposes only and may differ from the actual product.

Content

Content 3

Connecting Devices to your TV 5

Connecting an antenna, cable set-top box or satellite receiver 5

Connecting a satellite receiver, DVD player or other audio visual (AV) device with a composite video cable (yellow/red/white) 5

Connecting an AV device with a component video cable (red/blue/green) 6

Connecting an AV device with an HDMI cable 6

Connecting an MHL-Enabled device 7

Connecting a headphone 7

Connecting speakers or other audio receivers 7

Connecting a digital sound bar to use Audio Return Channel (ARC) 8

Connecting a USB device 8

Connecting Your TV to a Wireless or Wired Network 9

Connecting to a wireless network 9

Connecting to a wired (Ethernet) network 10

Using Your TV Remote Control 11

Buttons on your TV remote 11

Remote control range information 12

Completing the First-Time Setup Menu 14

Shortcuts Instructions 15

Turning your TV on or off 15

Selecting the input source 15

Using the Live TV 15

Using the Menu Function 17

Basic Settings 18

Using the Settings Menu 18

Picture Menu 19

Sound Menu 20

Network Menu 21

Channel Menu 21

Accessibility 22

System Menu 22

Support Menu 23

Parental Controls 24

Advanced TV Settings 26
Getting familiar with the Home screen 26
Notifications 26
All Apps 27
Media 28
Edit 28
Using Anyview Cast to mirror content from your device to the TV screen 29
Software updates for your TV 30

Quick Problem-Solving Tips 31

Connecting Devices to your TV

You have several options for connecting your TV to different devices. The method in which you connect will be based upon the type of cables you have and the available outputs on your device.

Connecting an antenna, cable set-top box or satellite receiver

To connect an antenna,cable set-top box or satellite receiver:

1. Connect one end of a coaxial cable (not included) to the **RF OUT** port on the antenna, cable or satellite box. If you are using an antenna with twin-lead cable, you may need a 300-75 Ohm adapter (not provided) to connect it to the back of your TV. Likewise, if you are using several antennas, you may need a combiner (not provided).
2. Connect the other end of the cable to the **ANT/CABLE** port on the side of TV.
3. Using your remote, press the **[INPUT]** button and select **ANT/CABLE** as the input source.

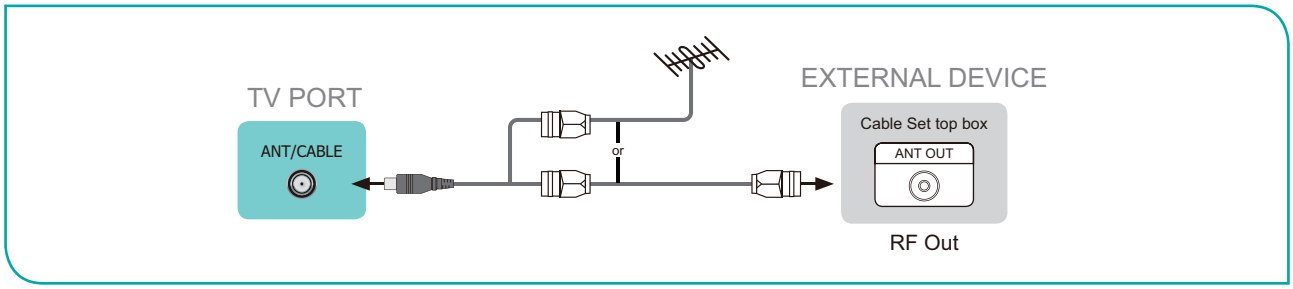

Connecting a satellite receiver, DVD player or other audio visual (AV) device with a composite video cable (yellow/red/white)

To connect an AV device with a composite video cable (not provided):

1. Use the audio and video cables to connect the composite video/audio ports of the external AV device to the **AV IN** ports of the TV. (Video = yellow, Audio Left = white, and Audio Right = red)
2. Plug the connected devices into the AV connectors on the TV before switching it on.
3. Using your remote, press the **[INPUT]** button and select **AV** as the input source.

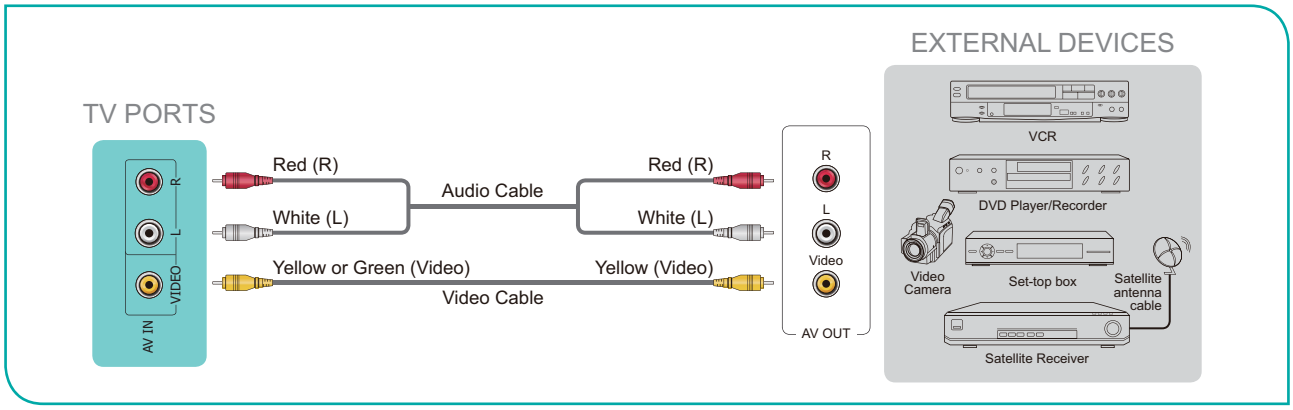

Connecting an AV device with a component video cable (red/blue/green)

To connect an AV device with a component cable (not provided):

1. Use a component video cable to connect the component output ports of the external device to the **YP_BP_R** ports for the TV. (Y = green, P_B = blue, and P_R = red). Use an audio cable to connect the component audio ports of the external device to the TV **AUDIO (L/R)** ports.
2. Plug the connected devices into the **YP_BP_R** and **L/R** ports on the TV before switching it on.
3. Using your remote, press the **[INPUT]** button and select **COMPONENT** as the input source.

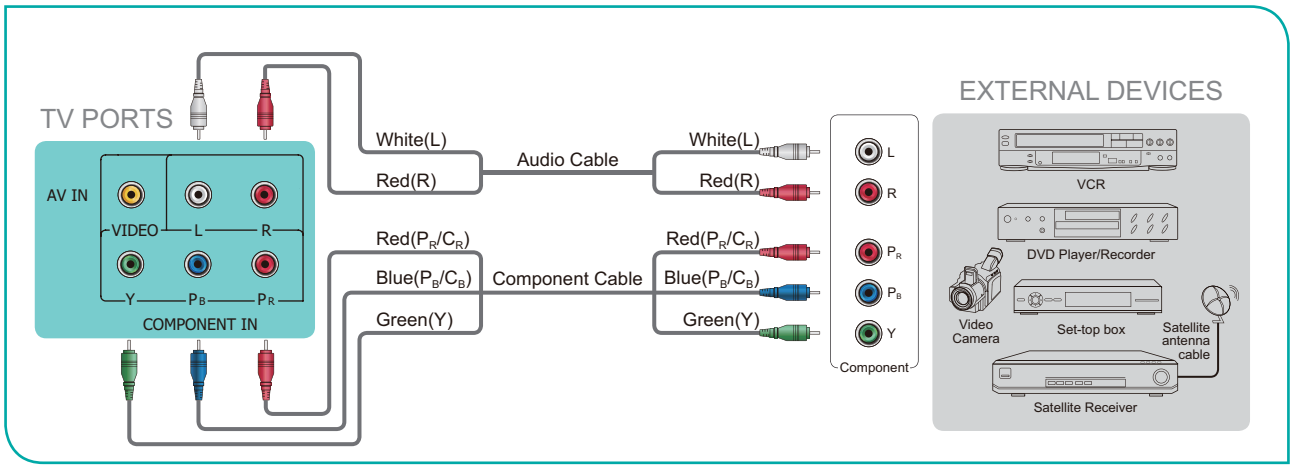

NOTE

- One AV device can be connected to the TV using a component video or composite video cable.

Connecting an AV device with an HDMI cable

This 4K TV has two different software versions of HDMI ports to connect HDMI-enabled devices. The two high-powered HDMI version 2.0 inputs enable you to connect 4K Ultra-HD external devices that require more bandwidth to transmit to the TV screen. For example, if you have an X-box or Blu-ray player that supports the 2.0 standard. The two HDMI version 1.4 inputs are great for any of your external devices that support a standard full high-definition resolution of 1080p.

Please refer to the User Manual that came with your device for step-by-step instructions.

To connect an AV device with an HDMI cable (not provided):

1. Use an HDMI cable to connect the HDMI output port of the AV device to the **HDMI** port of the TV.
2. Plug the connected devices into the **HDMI** port on the TV before switching it on.
3. Using your remote, press the **[INPUT]** button and select the corresponding **HDMI** input.

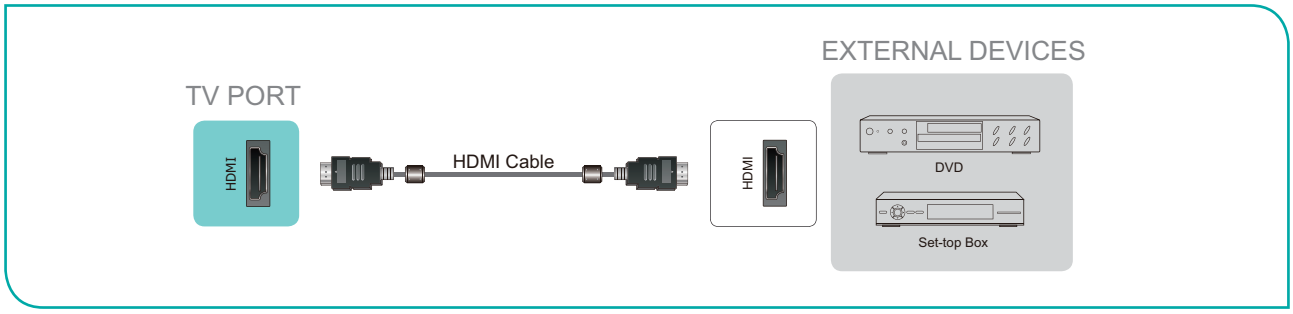

NOTES

- Because the HDMI connector provides video and audio signals, it is not necessary to connect an audio cable.
- We strongly recommend to use HDMI Cable with 2 cores as shown in the figure.

Connecting an MHL-Enabled device

You can connect an MHL-enabled device, such as a cell phone, and view the screen of your device on the TV.

1. Connect one end of an HDMI-to-MHL cable (not provided) to the micro USB port on the device.
2. Connect the other end of the cable to the **HDMI / MHL** port.
3. Select the corresponding source from the TV.

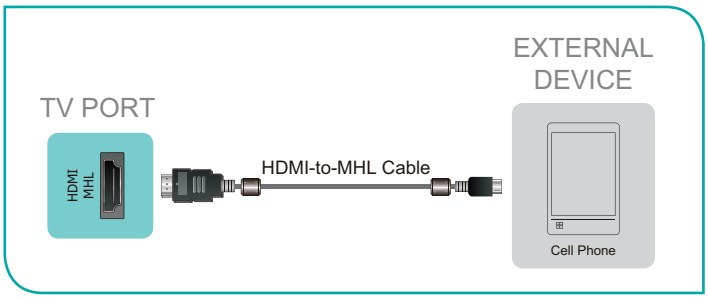

NOTES

- This feature may be unavailable on some TV series.
- We strongly recommend to use MHL Cable with 2 core as shown in the figure.

Connecting a headphone

You can connect headphone (not provided) to the **AUDIO OUT** port on your TV. While the headphone is connected, the sound from the built-in speakers will be disabled.

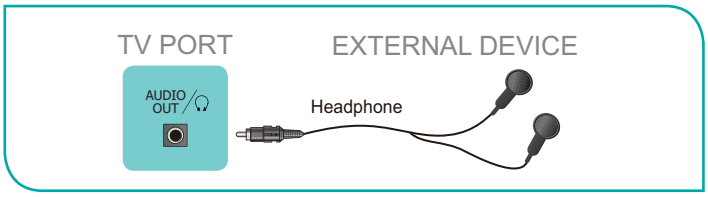

Connecting speakers or other audio receivers

To connect speakers or other audio receivers with an audio cable (not provided):

1. Use an audio cable to connect the digital audio in port of the audio receiver device to the **DIGITAL AUDIO OUT** port of the TV. Another option is to use an RCA Y-cable (1/8”-stereo mini to L/R phono) to connect an analog sound system to the **AUDIO OUT** port of the TV.
2. Plug the connected devices into the main power socket before switching on the TV.

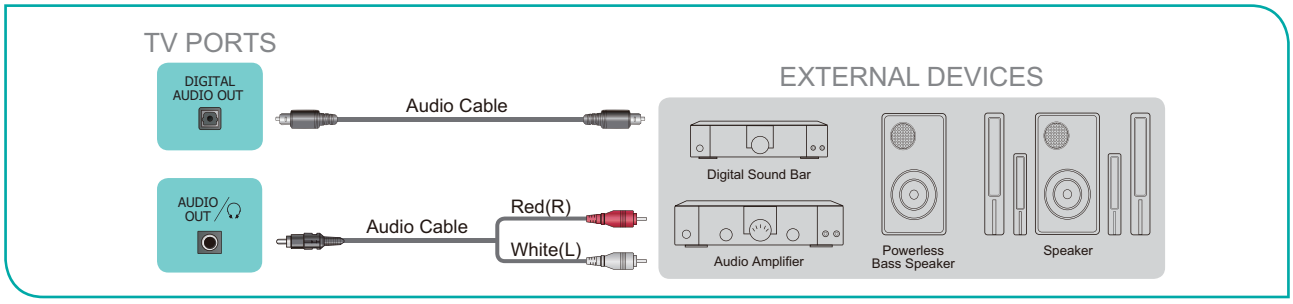

- **TIP:** If you prefer to use Audio Return Channel, then see *Connecting a digital sound bar to use Audio Return Channel (ARC) on page 8*.

NOTES

- When a digital audio system is connected to the **DIGITAL AUDIO OUT** port, decrease the TV and system volume.
- 5.1 CH (channel) audio is available when the TV is connected to an external device that supports a 5.1 channel surround sound
- You can receive 5.1 channel audio in one of two ways. The first way is to connect the **DIGITAL AUDIO OUT** port from the device to the Amplifier. The second way is to connect the **DIGITAL AUDIO OUT** port on the back of the TV to the Optical port on the Amplifier. After you’ve completed one of the two methods then be sure to go into the **Advanced Audio Settings** of the TV and select RAW to receive the 5.1 channel audio. You will need to also go into the sound or audio settings of your device to ensure it is set to 5.1 Channel output. It may read ‘Bitstream’, ‘RAW’ or ‘Digital’.

Connecting a digital sound bar to use Audio Return Channel (ARC)

If you'd like to use the Audio Return Channel (ARC) feature to have sound sent from the TV back down an HDMI cable to a digital sound bar, then you will need to connect the cable to the **HDMI / ARC** port. By using this feature, you will also be able to control the sound bar with your TV remote instead of having to use multiple remotes for each device.

To connect a digital sound bar with an HDMI cable (not provided):

1. Connect the cable that's attached to the sound bar to the **HDMI / ARC** port on the TV.
2. Turn on the sound bar by pressing the Power button.
3. Press the **[ ]** button on your remote and press the **[v]** button of your remote to select **Settings**, then press **[OK]** to enter the Settings menu, go to **System** > **CEC Function**.
4. Turn on the **CEC Control** setting.
5. Turn on the **Audio Receiver** setting.

NOTES

- Only digital sound bars that require a wired connection are compatible with the TV.
- If the device has an Input Selector feature then make sure to change it to TV.

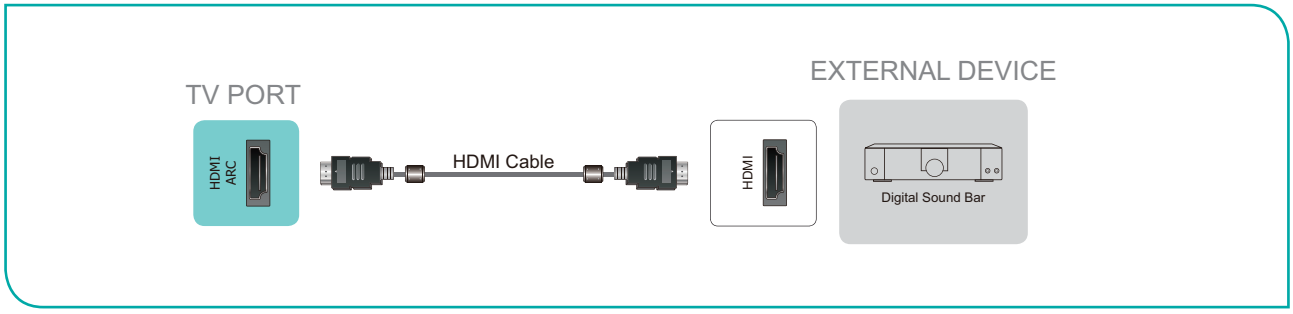

Connecting a USB device

You can connect the USB devices such as hard drives, USB sticks and digital cameras for browsing photos, listening music and watching recorded movies.

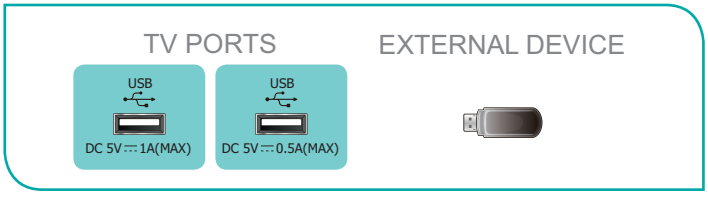

1. Connect a USB device into the **USB** port.
2. Select the Media type on the **Media** screen or **Home** screen. For more information, see *Media on page 28*.

NOTES

- When connecting a hard disk or a USB hub, always connect the mains adapter of the connected device to the power supply. Exceeding a total current consumption may result in damage. The USB1.1 and USB2.0 devices maximum current consumption are 500mA. The USB3.0 device maximum current consumption is 1A.
- For individual non-standard high-capacity mobile hard disk, if it's impulse current is greater than or equal 1A, it may cause TV-rebooting or self-locking. So the TV does not support it.
- The USB port supports a voltage of 5V.

Connecting Your TV to a Wireless or Wired Network

You have the option to connect your TV to a wireless or wired network to access the Internet. For more information about the network settings on TV, see *Network Menu on page 21*.

Connecting to a wireless network

Our built-in wireless LAN adapter supports the IEEE 802.11 ac/b/g/n communication protocols and we recommend that you use an IEEE 802.11n or IEEE 802.11ac router. When you play a video over an IEEE 802.11 b/g connection, the video may not play smoothly.

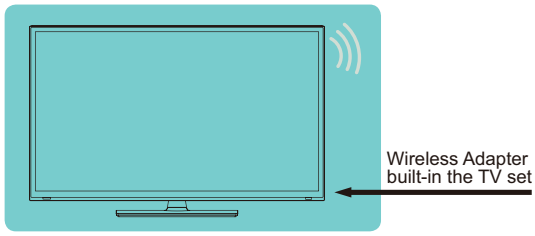

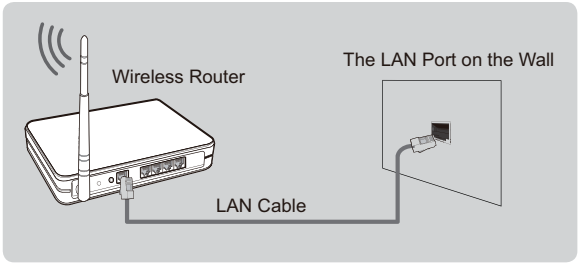

NOTES

- You must use the built-in Wireless LAN Adapter to use a wireless network because the set does not support an external USB network adapter.
- To use a wireless network, your TV must be connected to a wireless IP sharer. If the wireless IP sharer supports Dynamic Host Configuration Protocol (DHCP), your TV can use a DHCP or static IP address to connect to the wireless network.
- Select a channel for the wireless IP sharer that is not currently being used. If the channel set for the wireless IP sharer is currently being used by another device nearby, this will result in interference and communication failure.
- If you apply a security system other than the systems listed below, it will not work with the TV.
- If Pure High-throughput (Greenfield) 802.11N mode is selected and the Encryption type is set to WEP, TKIP or TKIP-AES (WPS2 Mixed) for your Access Point (AP), then the TV will not support a connection in compliance with these Wi-Fi certification specifications.
- If your access point (AP) supports Wi-Fi Protected Setup (WPS), you can connect to the network via Push Button Configuration (PBC) or PIN (Personal Identification Number). WPS will automatically configure the SSID and WPA key in either mode.

Connecting to a wired (Ethernet) network

You can attach your TV to your LAN in one of the three following ways:

- **Option 1**

You can attach your TV to your LAN by connecting the **LAN** port on the back of your TV to an external modem using a Cat 5 LAN cable. See the illustration below.

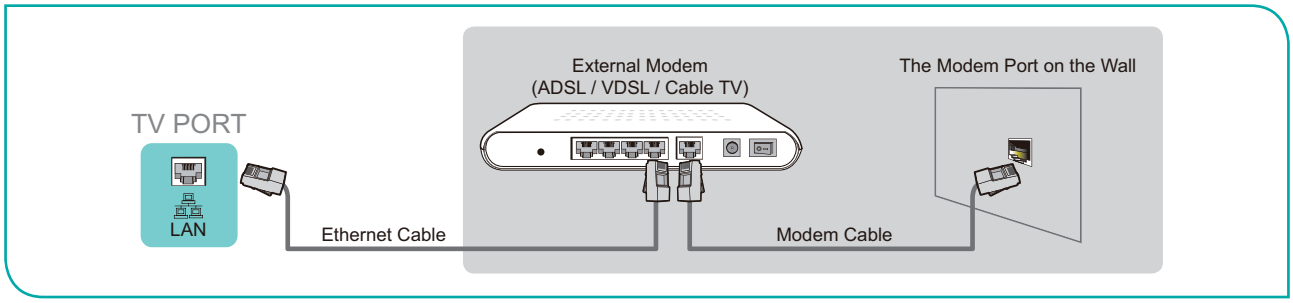

- **Option 2**

You can attach your TV to your LAN by connecting the **LAN** port on the back of your TV to an IP Sharer which is connected to an external modem. Use an Ethernet cable for the connection. See the illustration below.

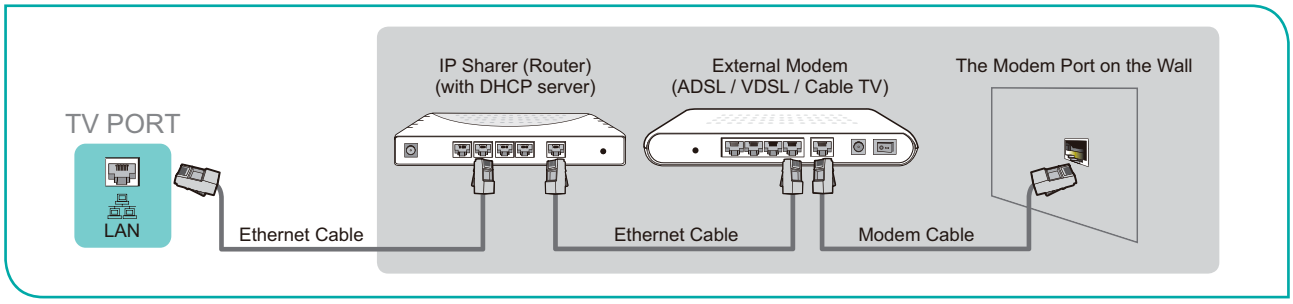

- **Option 3**

Depending on how your network is configured, you may be able to attach your TV to your LAN by connecting the **LAN** port on the back of your TV directly to a network wall outlet with an Ethernet cable. See the diagram below.

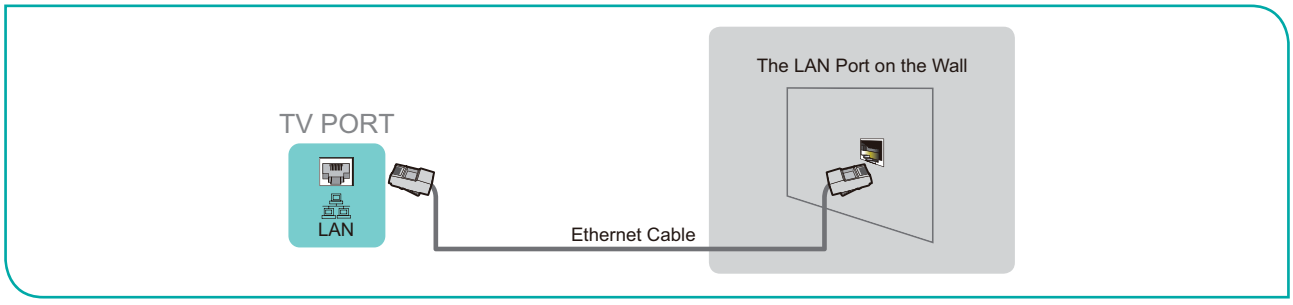

If you have a Dynamic Network, you should use an ADSL modem or router that supports Dynamic Host Configuration Protocol (DHCP). Modems and routers that support DHCP automatically provide the IP address, subnet mask, gateway, and DNS, so you don't have to enter them manually. Most home networks are Dynamic Networks.

Some networks require a Static IP address. If your network requires a Static IP address, you must enter the IP address, subnet mask, gateway, and DNS values manually on your TV's Cable Setup Screen when you set up the network connection. To get the IP address, subnet mask, gateway and DNS values, contact your Internet Service Provider (ISP).

NOTE

- You can use ADSL modems that support DHCP if your network requires a static IP address. ADSL modems that support DHCP also let you use static IP addresses.

Using Your TV Remote Control

Buttons on your TV remote

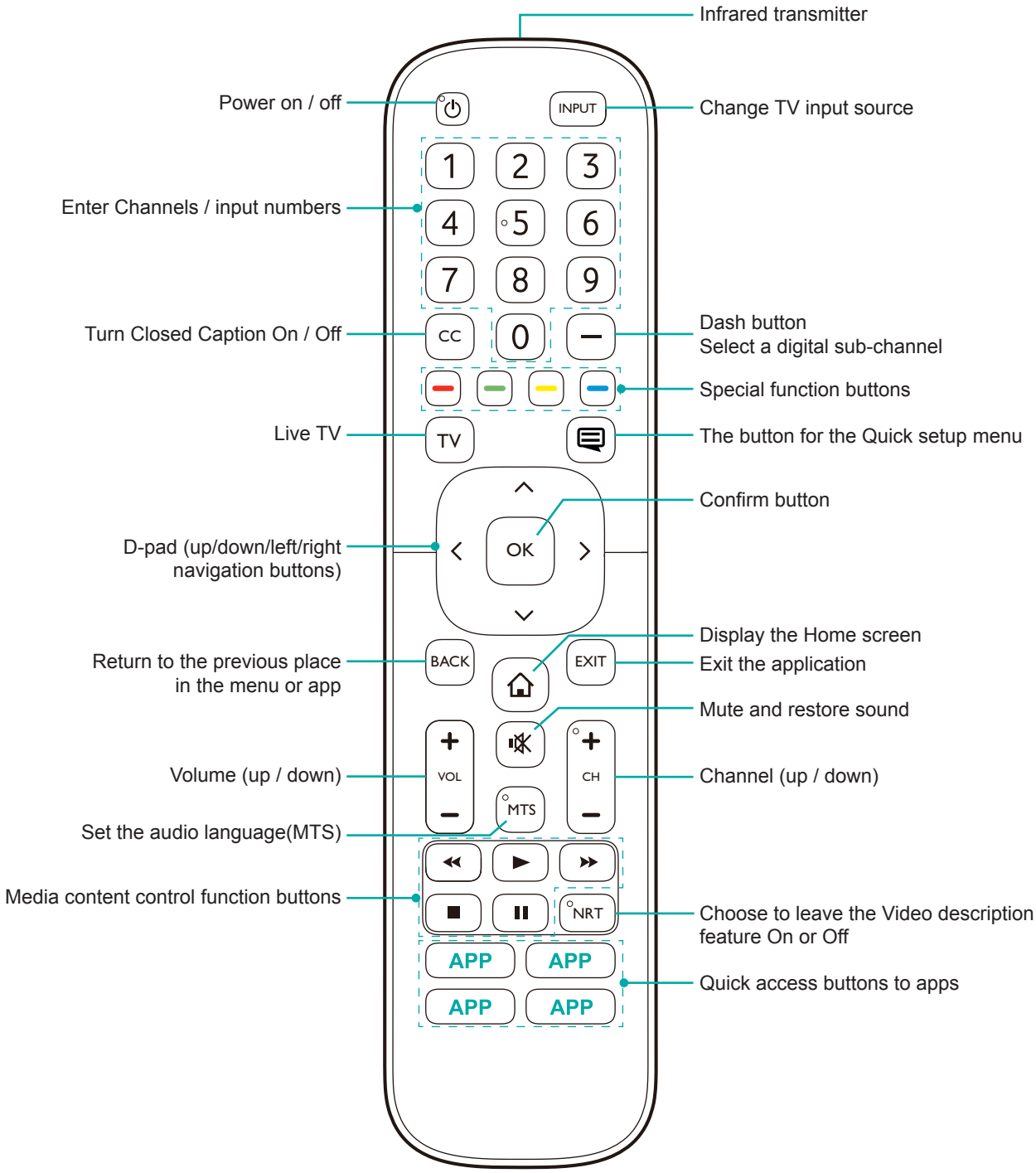

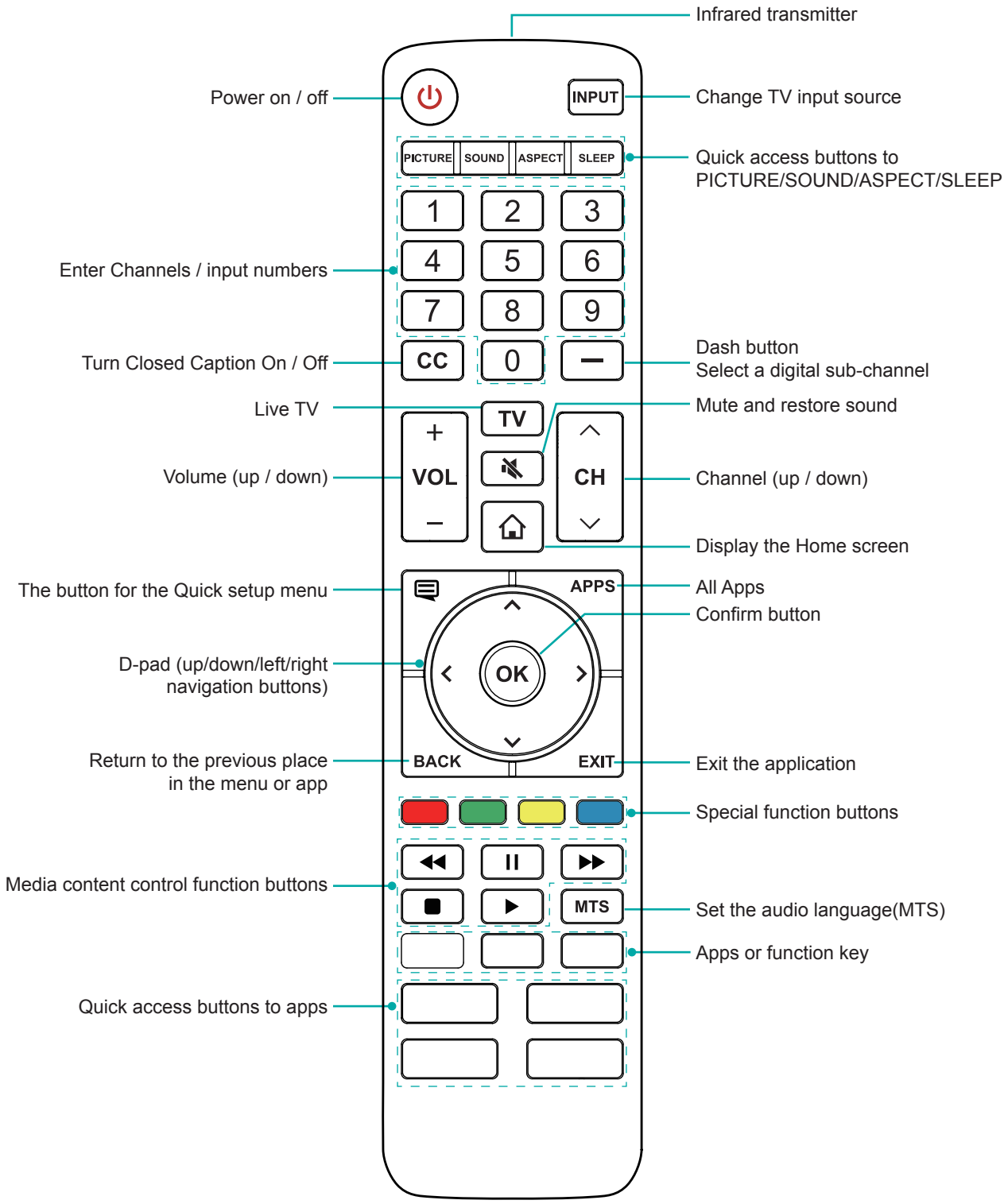

NOTE

- Check information according to the actual remote control in the accessory bag.

Remote control range information

- The remote control can work at a distance of up to 26 feet in front of the TV set.
- It can work at a 30 degree horizontal or vertical angle.

Begin using your remote

1. Slide the back cover to open the battery compartment of the remote control.

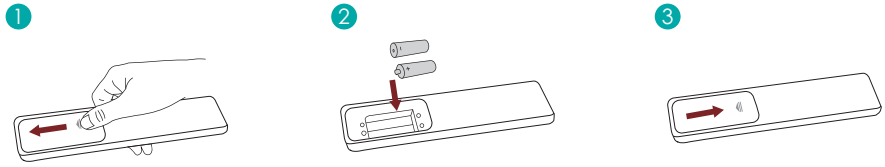

Gently push and slide | Insert the batteries | Gently push and slide

2. Insert two AAA size batteries. Make sure to match the (+) and (-) ends of the batteries with the (+) and (-) ends indicated in the battery compartment.
3. Replace the battery compartment cover.

NOTES

- Discard batteries in a designated disposal area. Do not throw them into a fire.
- Remove old batteries immediately to prevent them from leaking into the battery compartment.
- If you do not intend to use the remote control for a long time, remove the batteries.
- Battery chemicals can cause a rash. If the batteries leak, clean the battery compartment with a cloth. If chemicals touch your skin then wash it immediately.
- Do not mix old and new batteries.
- Do not mix alkaline, standard (carbon-zinc) or rechargeable (NiCd, NiMH, etc.) batteries.
- Do not continue using the remote if it gets warm or hot.
- Call our Support Center immediately on the support website.

Program your universal cable or satellite remote control to operate your new television (only for USA)

If you would like to program your other household remote controls to your new television,please refer to the User's Manual supplied by your Cable or Satellite provider. The Cable or Satellite providers' User's Manuals should include instructions on how to program their remote to your television.

A list of codes for the most common Cable and Satellite providers are listed below. Use the code that is associated with your Cable or Satellite provider (if applicable).

DIRECTV

0178, 10178, 10019, 10748, 11314, 11660, 11710, 11780, 12049, 10171, 11204, 11326, 11517, 11564, 11641, 11963, 12002, 12183

Time Warner Cable

386, 0178, 10178, 400, 450, 461, 456, 0748, 1463, 0463, 10463

Comcast

0178, 10178, 10463, 11463, 10748, 11314, 11660, 10171, 11204, 11326, 11517, 11641, 11780, 11785, 11892, 11963, 12002

Cox Communications

0178, 10178, 1326, 1463

Dish Network

505, 627, 538, 720, 659

If the code associated with your Cable or Satellite provider is not listed, does not work or you cannot locate the instructions to program your remote, call your local Cable or Satellite provider's customer service center.

If your Cable or Satellite provider does not have a code available, please contact us.

Using your cable set-top box or satellite receiver remote as a 'universal' remote

If you prefer to use your Cable Set-top Box or Satellite Receiver Remote as a 'Universal Remote', then visit the Support page to view a list of the codes.

Completing the First-Time Setup Menu

Press the **[⏻]**] button on the remote to turn on the TV.

After the splash screen that displays the logo appears, begin the first-time setup menu.

Screen	Task
Language and Location	Using the D-pad arrows of your remote, choose your **Language**, **Country** and **Time Zone**.
End User License Agreement	Choose **Decline** or **Agree**, then select **Confirm** icon and press **[OK]**.
TV Usage	Select **Home Mode**(which appears by default). **NOTE** • **Store Mode** should only be selected by Retailers who plan to demonstrate the TV.
Network Connection	If your TV does not automatically detect an Ethernet connection, then use a wireless network. Select your network from the list that displays, input the password. Also you can add a hidden network.
Select your primary input source	Select how you receive your TV channels. Choose from one of the following sources below. • **HDMI** • **ANT/CABLE** • **AV** • **COMPONENT** • **NONE** **NOTE** • If you use an antenna to receive channels, then you must complete the first-time setup menu in order to run a channel scan.

Shortcuts Instructions

You can use shortcuts on the remote control for fast operation.

Turning your TV on or off

- To turn your TV on:

1. Connect the power cord to the back of the TV, then plug the power cord into an AC outlet.
2. When the TV is powered on, press the **[⏻]** button on the remote to turn on TV.

- To turn your TV off, press the **[⏻]** button on the remote.

NOTES

- When your TV is in standby mode, it is still consuming power. To completely disconnect power, please remove the plug from the AC outlet.
- If your TV does not receive an input signal for several minutes, it automatically goes into standby mode.

Selecting the input source

Select the Input Source depending on the video device you have connected to your TV.

To select the input source:

1. Turn on your TV, then press the **[INPUT]** button on the remote, the list of Source appears.
2. Press the D-pad arrows of your remote to select the input source.
3. Press the **[OK]** button to confirm your selection.

Using the Live TV

To view broadcast programs, press the **[TV]** button on your remote.

Channel search guide

When you select ANT/CABLE as input, if no TV channels were saved before, you will be prompted to do a channel search. You can also go to **Setting** menu > **Channel** to change the channel settings.

Launch Live TV

After channel tuning is done for the first time, the screen will display Live TV operating tips, including: how to load the channel list, how to Load info Bar and so on.

[Menu] Load more functions

[OK] Load Channel List

[∧] Load Info Bar

[BACK] Load previous channel

Viewing channel information

As you use the **[CH+ / CH-]** button on your remote to scroll through channels, an information banner appears on the top of the screen.

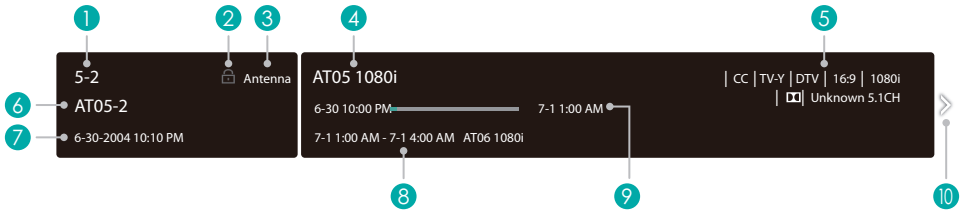

The information banner displays the following information:

1. Channel number
2. Lock status
3. Input
4. Program name
5. Show identification
6. Channel name
7. Current date and time
8. Beginning and end time of the next program
9. Start/Stop time progress bar of the current program
10. Prompt

If you are watching a particular channel, you can also press the up arrow button of your remote to view channel information.

Viewing a channel list

After you have done an automatic channel scan (if you're using an antenna) or are receiving your channels through a cable provider, you can view your list of channels by pressing **[OK]** on your remote.

You will see the channel list display on the right side of the screen.

Creating a Favorite List

To quickly access your most-watched channels, you can create a Favorite List.

To create your Favorite List:

1. Press the **[ ]** button on your remote.
2. Press the **[v]** button to select **Settings**, and then press **[OK]** button to enter the Settings menu.
3. Select **Channel** > **Favorite List**.
4. Using the **[∧ / v]** buttons of your remote, select a channel and press **[OK]** button.

A heart-shaped indicator will appear beside the channel as confirmation that it has been successfully added.

Viewing your Favorite list

To view channels that you've added to your Favorite List simply press **[OK]** on your remote to call out the channel list.

The channel list appears on the right side of the screen and heart-shaped icons are shown next to the channels that make up your Favorite List. You can press **[< / >]** buttons to switch the channel list (**Antenna** or **Cable**) , **Favorite** and **History** list.

Using the Menu Function

To quickly access menu function, press the **[ ]** button on your remote.

Accessibility

You can set **Menu Audio**, **Video Description** and **High Contrast Menu** on or off. The function can be used to meet the needs of visually impaired people.

When the **Menu Audio** is set on, the contents of each menu display can be broadcast out.

When the **Video Description** is set on, you can hear the introduction of relevant programs.

When the **High Contrast Menu** is set on, the comparison of menu items is more vivid.

Number Pad

You can press digital keys on the left of the screen, to get the relevant channels easily.

Picture Mode

If you'd like to configure the settings for your picture, then there are seven types of picture modes available: **Vivid**, **Standard**, **Energy Saving**, **Theater**, **Game**, **Sport** and **Calibrated**.

Sound Mode

Select a preset sound mode to suit the type of content you are listening to: **Standard**, **Theater**, **Music**, **Speech** and **Late Night**.

Aspect Ratio

Adjust the Aspect Ratio to stretch or zoom in on your picture. You can choose from the following settings: **Auto**, **Normal**, **Zoom**, **Wide**, **Direct**, **Dot-By-Dot**, **Panoramic** or **Cinema**.

CC

You can switch between **CC Off**, **CC On** and **CC On When Mute.**

Audio Language(MTS)

You can choose the audio language in DTV mode and you can set MTS for Mono, Stereo or SAP in ATV mode.

Audio Only

When you select this option, the screen will not display the picture. You can only listen the audio. Press any button except the **[ ]** button, **Volume [+/-]** buttons and **[ ]** button to restore operation.

Settings

The Settings Menu consists of the following settings: Picture, Sound, Network, Channel, Accessibility, System and Support.

Basic Settings

Your TV comes with many TV setting features to allow you to customize the picture based on your viewing preference and environment. As you navigate throughout different screens to access settings, some of the indicators appear as words On and Off.

Using the Settings Menu

You can press the **[ ]** button to access the **Menu**, press the **[v]** button on the D-pad to select **Settings**, and then press **[OK]** button to enter the **Settings Menu**.

The **Settings Menu** consists of the following settings:

- **Picture**
- **Sound**
- **Network**
- **Channel**
- **Accessibility**
- **System**
- **Support**

In each menu, you can:

- Press the **[∧ / v]** buttons to select an item.
- Press the **[OK]** buttons to enter the sub-menu or to set on or off.
- Press the **[< / >]** buttons to adjust the value.
- Press the **[BACK]** button to return to the previous menu.
- Press the **[EXIT]** button to exit the menu.

Picture Menu

- **Backlight:** Some models have a **Dynamic Backlight Control** setting that you can turn Off and set to High, Middle or Low. Some models have a **Local Dimming** setting is available that will enable the TV to automatically adjust the backlight by sections according to the changes in image and increase the contrast. The **Backlight Level** setting enables you to adjust how bright you want images to appear, lower settings create darker images. In addition, an **Automatic Light Sensor** setting is available that will enable the TV to automatically adjust the picture settings according to the amount of ambient light in your room. The **Minimum Backlight** setting enables you to adjust the lower point of the dynamic backlight adjustment scope. This is a money-saving feature because it reduces power consumption.
- **Picture Mode:** If you'd like to configure the settings for your picture, then there are seven types of picture modes available: **Vivid**, **Standard**, **Energy Saving**, **Theater**, **Game**, **Sport** and **Calibrated**.

Once you choose the mode, you can adjust the picture based on the following settings:

- **Contrast:** Adjust the Contrast level to increase or decrease how bright images appear.
- **Brightness:** Adjust the Brightness level to generate lighter or darker images.
- **Color:** Adjust the color intensity of the picture for a more vibrant image.
- **Tint:** Adjust the colors from a green to magenta tint to view the natural skin tones of people on the screen.
- **Sharpness:** Adjust how sharp or soft edges of images appear.
- **Aspect Ratio:** Adjust the Aspect Ratio to stretch or zoom in on your picture. You can choose from the following settings: **Auto**, **Normal**, **Zoom**, **Wide**, **Direct**, **Dot-By-Dot**, **Panoramic** or **Cinema**.
- **Advanced Picture Options:** Adjust advanced picture settings based on your viewing preference.
  - **Overscan:** Change the video size settings to slightly crop the edges of the displayed image.
  - **Color Temperature:** Select a preset color temperature. Adjust how warm(red) or cool(blue) the white areas of an image appears.
  - **Motion Enhancement:** This setting minimizes afterimages that are left on the screen when viewing fast-moving objects. You can adjust it from Smooth, Standard, Clear, Film,Custom or Off. A Smooth setting will produce a smoother picture whereas a Clear setting will result in a picture that has less judder (shaking).
  - **Judder Reduction:** To enhance picture smooth, please try to reduce picture judder, but it may cause picture blur.
  - **Blur Reduction:** To avoid missing picture details, please try to reduce blur, but it may cause picture fluter.

NOTE

- Some models don't support the function of Motion Enhancement, Judder Reduction or Blur Reduction.

  - **Digital Noise Reduction:** Improve how clear the picture appears by reducing noise.
  - **HDMI Dynamic Range:** Adjust the HDMI signal range to be more suitable for the content.
  - **Active Contrast:** Automatically darken dark areas and lighten light areas of images to see more details.
  - **Color Space:** Change the range of colors the TV displays.

NOTE

- Some models don't support this function.

- **Expert Settings:**
  - **Color Tuner:** Adjust the Hue, Saturation and Brightness of color settings.
  - **White Balance:** Adjust the intensity of red, green and blue lights to view the true colors of all images in the picture.
  - **Gamma Adjustment:** Adjust the Gamma to choose how the TV will respond to the content grayscale. In a dark room choose a Higher number like 2. In a brighter area select a lower number like 0. In general, 1 is normally recommend.

NOTE

- Some models don't support this function.

- **RGB Only Mode:** View images based on default settings or choose the color red,blue or green.
- **Apply Picture Settings:** Adjust current picture mode to apply to all sources or just current source.
- **Reset Picture Settings:** Reset all the picture settings in the current picture mode to the factory default values.

Sound Menu

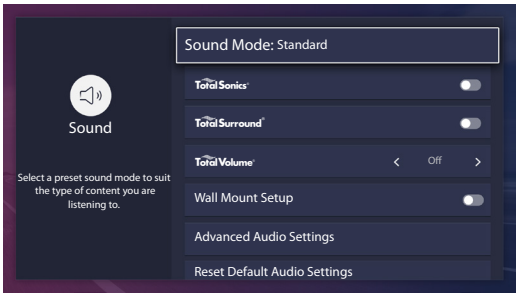

- **Sound Mode:** Select a preset sound mode to suit the type of content you are listening to: **Standard**, **Theater**, **Music**, **Speech** and **Late Night**.

Set the sound effects to suit your preference.

Configure your audio settings for your sound preferences. Once you choose the mode, you can adjust the audio based on the following settings:

- **Total Sonics™ Total Sonics:** Optimizes overall sound quality by increasing bass, making dialog clear and natural, and widening the sound field.
- **Total Surround™ Total Surround:** Provides surround sound experience with psychoacoustic processing to place sounds beside, behind, and above the viewer. For best results use with Total Sonics.
- **Total Volume™ Total Volume:** Maintains consistent loudness levels from wide dynamic range programs, too-loud commercials, and channel or input changes.
- **Wall Mount setup:** Automatically optimize the sound based on the position of the TV.
- **Advanced Audio Settings:** Tune the audio settings and quality of the TV.
  - **Balance:** Adjust the left and right speaker strength to optimize audio for a specific location.
  - **TV Speaker:** Disable the TV speaker when you are using a sound bar, ARC or any other external audio amplifier.
  - **Digital Audio Out:** Select the digital audio output format that best suits the audio device type. For example, choose **RAW** (which is uncompressed audio in RAW form) if you have 5.1 Channel Surround Sound Speaker set up. Choose **PCM** if you have an amplifier that does not support Dolby Digital technology.
  - **Digital Audio Delay:** Adjust the digital audio output delay time to sync sound from an external speaker with the images on the TV.
  - **Lip Sync:** Synchronize the displayed image with the audio output.
  - **Equalizer:** Boost the volume at different frequencies.
  - **Preferred Audio Language:** Set the default audio output language for the type of digital broadcast content that you're viewing.
  - **Audio Out:** Change the way audio is sent through the type of device that's connected to your TV Audio Out port.
- **Reset Default Audio Settings:** Reset all of the audio settings in current audio mode to the factory default values.

Network Menu

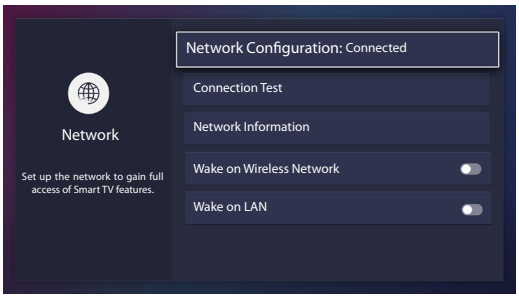

- **Network Configuration:** Set up the network to gain full access of Smart TV features.

  When the Connection Type is **Ethernet**, means you choose a wired network connection to access the Internet.

  - **IP Settings:** Configure the IP setting for your network connection.

  When the Connection Type is **Wireless**, means you choose a wireless network connection to access the Internet.

  - **Refresh:** Refresh wireless network.
  - **Add:** You can add wireless network.
  - **Advanced Settings:** Configure the advanced wireless network settings for the TV.
- **Connection Test:** Start a network connection test.
- **Network Information:** View information about your network connection.
- **Wake on Wireless Network:** Using a wireless connection, turn on your TV with a screencast feature inside an app.
- **Wake on LAN:** Using an Ethernet connection, turn on your TV with a screencast feature inside an app.
- **Bluetooth:** Connect to the network using Bluetooth technology.

NOTE

- Some models don't support this function.
- A Bluetooth device may hum or malfunction, if the problem persists, try connecting the device using the digital optical port or the HDMI (ARC) port.

Channel Menu

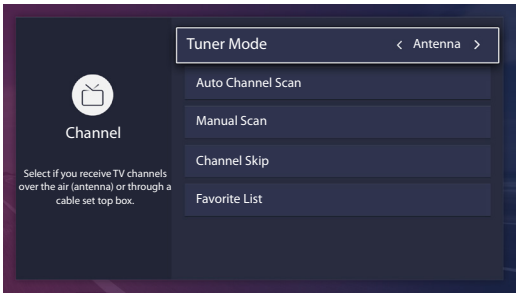

- **Tuner Mode:** Select if you receive TV channels over the air (antenna) or through a cable set top box.
- **Auto Channel Scan:** Automatically scan for channels to view programming from your TV source.
- **Manual Scan:** Type in a channel to add it manually to your TV.
- **Channel Skip:** Skip a channel that your TV picked up during a previous channel scan search.
- **Favorite List:** Quickly access your most-watched channels by adding them to the Favorite list.

Accessibility

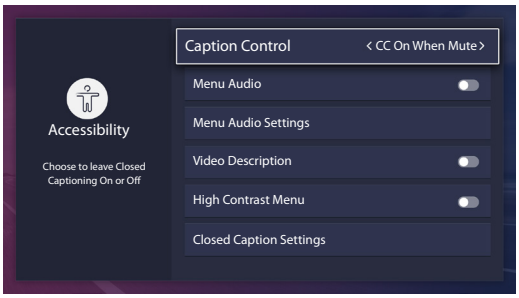

- **Caption Control:** Choose to leave Closed Captioning On or Off.
- **Menu Audio:** Choose to leave the Audio Menu Prompts On or Off.
- **Menu Audio Settings:** Adjust Menu Audio settings to your preference.
  - **Volume:** Set the Menu Audio volume.
  - **Language:** Set the Menu Audio language.
  - **Rate:** Set the Menu Audio speed.
  - **Pitch:** Set the Menu Audio pitch.
  - **Focus Menu Audio:** Turn down the background volume when Menu Audio is playing.
- **Video Description:** Choose to leave the Video description feature On or Off.
- **High Contrast Menu:** Choose to leave the high contrast menu On or Off.
- **Closed Caption Settings:** Adjust Closed Caption settings to your preference.
  - **Analog Caption:** Select an Analog Caption setting from Off, CC1-CC4, Text 1-TEXT4.

    CC1-CC4: Closed captioning appears in a small banner across the bottom of the screen. CC1 is usually the "printed" version of the audio. CC2-CC4 display content are provided by the broadcaster.

    Text1-Text4: Closed captioning that covers half or all of the screen. Text1-Text4 display content are provided by the broadcaster.

    Off: To turn off the Analog Caption.
  - **Digital Caption:** Select a Digital Caption setting: Off, CS1-CS6.
  - **Digital CC Settings:** There are two caption styles. One is the **Automatic** function set as the broadcaster, while the other is the **Custom** style where you can adjust the **Size**, **Font**, **Text Color**, **Text Opacity**, **Background Color** etc.

System Menu

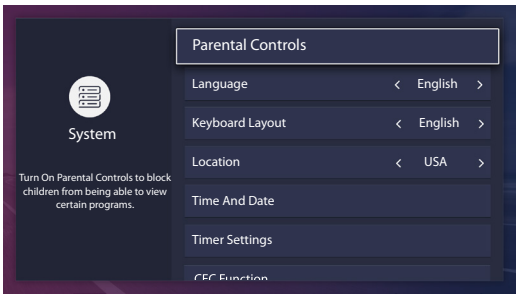

- **Parental Controls:** Turn On Parental Controls to block children from being able to view certain programs. The password is required to be set when you use this function for the first time. For more information about Parental Controls, See *Parental Controls on page 24*.
- **Language:** Adjust the default Language settings for the TV.
- **Keyboard Layout:** Change TV keyboard layout language.
- **Location:** Choose the location from where you will watch your TV.
- **Time And Date:** Set the current time based on your location.
  - **Time Zone:** Select your time zone.
  - **Time Format:** Set the time to display in a 12 or 24-hour format.
  - **Daylight Savings:** Select whether to apply Daylight Savings Time to the TV.
  - **Date/Time:** Set the Date and Time.
- **Timer settings:** Adjust the timer settings to suit your preference.
  - **Sleep Timer:** Set the sleep timer to automatically turn the TV Off within a specified time: Off, 10 Minutes, 20 Minutes, 30 Minutes, 40 Minutes, 50 Minutes, 60 Minutes, 90 Minutes and 120 Minutes.
  - **Power On Timer:** Set the clock for the time you want the TV to turn On automatically.
  - **Power Off Timer:** Set the clock for the time you want the TV to turn Off automatically.
  - **Menu Timeout:** Set the amount of time that you'd like for the menu to display : 10s, 20s , 30s , 60s or Off.
- **CEC Function:** Configure how to control CEC-enabled devices with your TV remote.
  - **CEC Control:** Allow CEC-enabled devices that are connected to HDMI ports to control the TV.

- **Device Auto Power Off:** Allow CEC-enabled devices to turn off with the TV.
- **TV Auto Power On:** Allow the TV to turn On with CEC-enabled devices.
- **Audio Receiver:** Allow the Audio Receiver to send audio over an HDMI cable and back to or from your TV.
- **CEC Device Lists:** View a list of all CEC-enabled devices.
- **Device Connect:** Allow connected devices to the HDMI ports to communicate back and forth with the TV.

NOTES

- HDMI cables must be used to connect HDMI CEC-compatible devices to your TV.
- The HDMI CEC feature of the connected device must be turned on.
- If you connect an HDMI device that is not HDMI CEC-compatible, all the HDMI-CEC Control features do not work.
- Depending on the connected HDMI device, the HDMI-CEC Control feature may not work.

- **HDMI 2.0 Format:** Match the connected device output format. Select Enhanced for devices of 4K, 60Hz, 4:4:4:4:2:2 or 4:2:0, 10 bit and above.
- **TV Name:** Choose a name for your TV. The name will be shown to devices that are available for sharing data.
- **Application Settings:** Set settings for apps on your TV.
  - **Anyview Stream:** Share video, music or other content from compatible device on your TV screen.
  - **Netflix:** Remove this TV from your Netflix account. Please contact Netflix if you want to stop being billed for your service.
  - **VUDU:** Remove this TV from your VUDU account. Please contact VUDU if you want to stop being billed for your service.
- **Advanced Settings:** Access the Advanced Settings menu.
  - **Power LED:** Set the power indicator light to stay On or Off when standby mode.
  - **Audio Only:** Turn off the screen display to save energy. Press any button except the **[⏻]** button, **Volume [+/-]** buttons and **[🔇]** button to turn the picture back on.
  - **Input Labels:** Edit the input labels.
  - **Default Live TV Source:** Set up a source as the default source, which is launched with the Live TV button.
  - **Screensaver:** Select to show an active screensaver when the TV is idle.
  - **Notifications:** Allow pop-up notifications to appear for useful information and events that occur with your TV.
  - **Send Diagnostics and Usage:** Send TV running errors and usage statistics to the server to improve service quality (No personal information is collected).
  - **Use Mode:** Set the TV to use in Home or Store Mode (Some models have a Store Mode with 4K Video).
- **Setup Wizard:** Use the Setup Wizard for instructions to help you set up your TV.

Support Menu

- **About:** View system information.
- **Disclaimer:** Click to read the Disclaimer details.
- **Check Firmware Upgrade:** Check to ensure that your TV has received the latest firmware.
- **Signal Diagnosis:** Check diagnostic information for current input source.
- **Reset To Default:** Reset your TV back to the factory default.

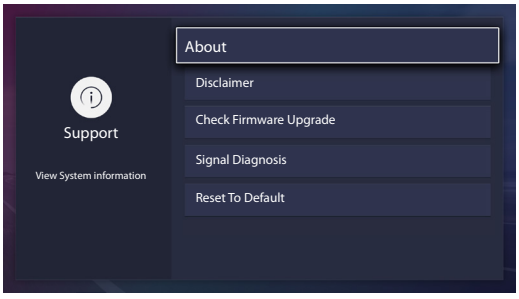

Parental Controls

The Parental Controls setting allows you to block content that is not appropriate for children to watch. You can do this by creating a 4-digit password.

Turning Parental Controls On

1. Press the **[ ]** button on your remote.
2. Press the **[v]** button on the D-pad to select **Settings**, press **[OK]** button to enter the Settings menu.
3. Select **System** > **Parental Controls**.
4. Press the **[OK]** button on your remote, a Create PIN window displays. Using the numerical keypad on the window, create the password.
5. Go to **Locks**.
6. Press the **[OK]** button to turn the locks On.

You will see the other Parental Control settings change from a greyed out state and become highlighted. When this occurs, begin adding other settings to the **Block Time**, **Channel Block**, **Program Block**, **Input Block, App Restriction, Change PIN** or **Reset Parental Control Defaults** features.

- **Block Time:** Block certain channels and programs during certain periods of time.
- **Channel Block:** Block programs by channels when you turn on the Parental Controls feature.
- **Program Block:** Certain programs are blocked when you activate the parental control settings.
- **Input Block:** Block content from devices that are connected to certain TV ports.
- **App Restriction:** Block specific apps when Parental Controls is on.
- **Change PIN:** Change your PIN that you use to access Parental Controls. If you want to change your parental control password, first enter the new password then enter the same password again.

NOTE

- If you forget your password, call the **Consumer Electronics Care Center**.

- **Reset Parental Control Defaults:** Reset Parental Controls back to the factory setting.

Description of US TV Ratings

Content	Defined as
A	All
D	Suggestive dialog
L	Coarse or crude language
S	Sexual situations
V	Violence
FV	Fantasy Violence

Description of Age-based Ratings

Age	Defined as
TV-Y	All children
TV-Y7	Directed to older children
TV-G	General audience
TV-PG	Parental Guidance Suggested
TV-14	Parents strongly cautioned
TV-MA	Mature Audiences Only

US Movie Ratings

Rating	Defined as
G	General audience
PG	Parental Guidance suggested
PG-13	Parents strongly cautioned
R	Restricted
NC-17	No one 17 and under permitted
X	A rating that has now been superseded by NC-17

Canadian English Ratings

Rating	Defined as
C	Children
C8+	Children 8 years and older
G	General programming that is suitable for all audiences
PG	Parental Guidance
14+	Viewers 14 years and older
18+	Adult Programming

Canadian French Ratings

Rating	Defined as
G	General (appropriate for all ages and must contain little to no violence or sexual content)
8ans+	General but inadvisable for young children(could contain scenes disturbing to children under eight). Recommended for viewing with parent.
13ans+	Programming is appropriate for children 13 and older and may contain moderate violence, language and some sexual situations.
16ans+	Recommended for children 16 and older and may contain strong violence, language and sexual content.
18ans+	Programming intended for viewers that are 18 and older. Programming may contain extreme violence and graphic sexual content/pornography.

NOTE

- All ratings that are higher than those you select are also blocked. For example, if you choose to block the PG-13 rating, then the higher ratings (R and NC-17) are automatically blocked too.

Open V-Chip

Turn this On to automatically block programs based on the US rating.

Block Unrated

Block or unblock unrated movies.

Advanced TV Settings

Getting familiar with the Home screen

The simple design of the **Home** screen menu makes it easy to navigate. It serves as the central location to access **Notifications**, **All Apps**, **LiveTV**, **All Inputs**, **Media**, **Settings** and **Edit** on the back of the TV that you've connected external devices to.

To access the Home screen, press the **[⌂]** button on your remote control and use the arrows on the D-pad to make your selection.

Indicators and Icons on the top of the Home screen

You can always view the current time in the top left corner of the Home screen.

If your TV is connected to the Internet through a wireless connection, then an icon will display in the top right corner of the screen. This location makes it very convenient for you to determine if you still have Internet connectivity as you use the TV.

Names of sections that appear on the Home screen

The Home screen displays the following section names:

- **Notifications**
- **All Apps**
- **LiveTV**
- **All Inputs**
- **Media**
- **Settings**
- **Edit**

Notifications

If your TV is connected to an external device, the screen will be prompted.

All Apps

Numerous factory-installed apps are available for you to choose from for your entertainment preferences.

Installing an App

- To install an app from the **App Installer**:

1. From the Home screen, click on the **All Apps** to select the **App Installer** icon.
2. Use the navigation buttons on your remote to select the app that you want to install.
3. Press the **[OK]** button on your remote.

- To install an app from the **Opera TV Store**:

Even though your TV has numerous factory-installed apps, there may be others that you'd like to download.

1. From the Home screen, click on the **All Apps** to select the **Opera TV Store** icon.
2. Navigate to the **SEARCH** tab.
3. Begin typing the name of the app. As you begin typing the first two to three letters the Opera Store suggests words to quicken your search time.
4. Use the navigation buttons of your remote to select the app. A page displays that shows a written description of the app.
5. Click on **OPEN** or **ADD TO FAVORITES**.

Removing an App

You can only delete apps that you've installed to the TV. Factory-installed apps can not be deleted.

To delete an app:

1. From the All Apps screen, click on the **Delete** icon.
2. Use the navigation buttons on your remote to select the app that you want to remove.
3. Press the **[OK]** button on your remote. A dialog message displays that asks if you're sure you want to remove the app.
4. Click on **Delete**. A confirmation message displays and the icon is removed from the Apps list screen.

NOTE

- If an app is deleted,the information related to that app is also removed.

Moving App Icons around

Apps can not be moved around on the screen.

Customizing the name of your TV

If you have several TV's in your home then you may want to customize the name of your TV. By giving your TV a name, it will make it easier for you to identify it when connecting devices to the TV to stream or mirror content.

To customize the name of your TV:

1. Press the **[ ]** button on your remote.
2. Press the **[v]** button on the D-pad to select **Settings**, press **[OK]** button to enter the Settings menu.
3. Go to **System** > **TV Name**.
4. Select **User Input** to bring up the keyboard and begin typing the name.
5. When you are finished, power off the TV and power it back on for the change to take effect.

Media

Media is a central location for you to view or listen to different types of content (for example, your photos, music and movies) through the following methods:

- A USB thumb drive or hard drive
- Compatible mobile phone, tablet or other personal device: You can stream movies, music and photos that are stored on Compatible personal device and play or view the content on your TV.

Panels that appear on the Media screen

The Media screen displays four panels: **Picture**, **Video**, **Music** and **All**.

File formats that may be supported

NOTE

- Due to differences in programming tools and other factors, some of the file formats that are listed may or may not be supported.

Medium	File Format
Video	.avi (MPEG2, Divx), .mkv (Divx), .mpeg (MPEG2), .wmv (Divx, XviD)
Picture	.JPG
Music	.mp3

Browsing Content

To browse through content based on the type that you wish to access:

1. Navigate to the appropriate menu tab on the left side of the screen and select **Music**, **Video**, **Picture** or **All**.
2. Click on the name of the folder that contains your content.
3. Make your selection to play or view the content.

If you want to close out of the Media center, then press the **[EXIT]** button on your remote.

Viewing Pictures as a Slideshow

To view pictures in a slideshow:

1. Navigate to the Picture tab.
2. Click on start the Slideshow.

The slideshow of your pictures begins to play. To stop the slideshow, press the **[OK]** button on your remote and press it again to restart it.

Viewing Video

To stop or restart the video, you can press the **[OK]** button on your remote. You can use the navigation buttons of your remote to control the video.

Edit

By operating this option, you can edit the home page, add a title, add an input, add an app and add a channel.

Using the [**∧ / ∨**] buttons of your remote to change or remove it, also you can select **Reset** to return your operation.

Using Anyview Cast to mirror content from your device to the TV screen

The Anyview Cast is an app that enables you to share (or cast) a video, audio or image from your Android-based device to the TV.

From your tablet or phone

To mirror content from your tablet or phone to the TV:

1. Press the **[ ]** button on your remote, press the **[v]** button on the D-pad to select **Settings**, press **[OK]** button to enter the Settings menu. Go to **Network** > **Network Configuration** and select **Wireless**.
2. Press the **[INPUT]** button on your remote and select the **Anyview Cast**.
3. Turn on the wireless display function on your Android-based device.

NOTE

- Some Android-based devices may not support casting.

4. Find your TV in the list of devices that displays and select it.
5. Wait for the Creating Connection progress bar to complete on the TV screen and the video or image will display in a moment.

Software updates for your TV

The software (also referred to as firmware) is part of what powers your TV. We will provide software updates to continuously enhance your TV and correct any issues that may impact your user experience; therefore, we recommend that you keep your TV connected to the Internet to receive updates when they are available.

You can choose to receive updates manually or check for software updates and install them manually.

Checking for the latest firmware

To manually check for the latest firmware:

1. Using your remote, press the **[ ]** button.
2. Press the **[v]** button on the D-pad to select **Settings**, press **[OK]** button to enter the Settings menu.
3. Go to **Support** > **Check Firmware Upgrade**.

Quick Problem-Solving Tips

When you experience an issue with your TV, turn it off and on again. If this does not resolve the problem, then refer to the tips below. If the problem is still not resolved, then contact us.

ISSUES	POSSIBLE SOLUTIONS
No sound or picture	• Check if the power cord is plugged into a powered AC outlet. • Press the [⏻] button on the remote control to activate the unit from 'Standby' mode. • Check to see if the LED light is on or not. If it is, then the TV is receiving power.
I have connected an external source to my TV and I get no picture and/or sound	• Check for the correct output connection on the external source and for the correct input connection on the TV. • Make sure you have made the correct selection for the input mode for the incoming signal.
When I turn on my TV, there is a delay for a few seconds before the picture appears. Is this normal?	• Yes, this is normal. The TV is initializing and searching for previous setting information.
The picture is normal but there is no sound	• Check the volume settings. • Check if 'Mute' mode is set to On.
Sound but no picture or black and white picture	• If the picture is black and white, unplug the TV from the AC outlet and replug it after 60 seconds. • Check that the Color is set to 50 or higher. • Try different TV channels.
The sound and/or picture is distorted or appears wavy	• An electric appliance may be affecting the TV. Turn off any appliances that are nearby and move it farther away from the TV. • Insert the power plug of the TV set into another power outlet.
The sound and picture is blurry or cuts out	• If using an external antenna, check the direction, position and connection of the antenna. • Adjust the direction of your antenna or reset or fine tune the channel.
A horizontal or vertical stripe appears on the picture and/or the picture is shaking	• Check if there is an appliance or electric tool nearby that is causing interference.
The plastic cabinet makes a "clicking" type of sound	• The 'click' sound can occur when the temperature of the television changes. This change causes the television cabinet to expand or contract, which makes the sound. This is normal and the TV is OK.
The remote control does not work	• Confirm that TV still has power and is operational. • Change the batteries in the remote control. • Check if the batteries are correctly installed.

NOTE

- For usage in Mexico , operation of this equipment is subject to the following two conditions : 1) it is possible that this device doesn't cause any detrimental interference and 2) this device must take any kind of interference, including that which may cause its malfunctioning.