ES-A171533-1

Hisense • Roku TV

R6 Series

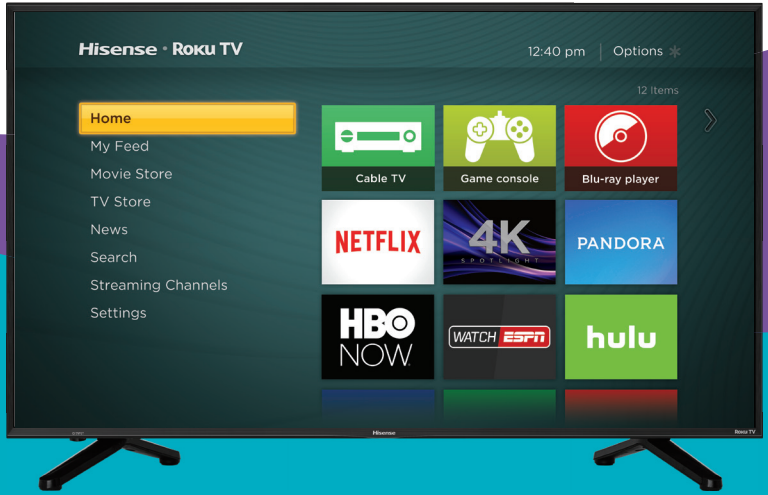

Quick Start Guide

Help Hisense and Roku improve the environment by reducing paper waste. For detailed instructions and feature descriptions, access the full User Manual online at www.hisense-usa.com/support.

©Hisense Company Ltd. and Roku, Inc. 2017

All material in this Quick Start Guide is the property of Hisense Company Ltd. and Roku Inc. and its subsidiaries, and is protected under U.S. and International copyright and/or other intellectual property laws. Reproduction or transmission of the materials, in whole or in part, in any manner, electronic, print, or otherwise, without the prior written consent of Hisense Company Ltd. and Roku, Inc. is a violation of the rights of Hisense Company Ltd. and Roku, Inc. rights under the aforementioned laws.

No part of this publication may be stored, reproduced, transmitted or distributed, in whole or in part, in any manner, electronic or otherwise, whether or not for a charge or other or no consideration, without the prior written permission of Hisense Company Ltd. and Roku, Inc.

Requests for permission to store, reproduce, transmit or distribute materials may be made to the following address:
USA: Hisense USA Corporation
PO Box 3289
Suwanee, GA 30024

Hisense, and any and all other Hisense product names, logo's, slogans or marks are registered trademarks of Hisense Company Ltd. and its subsidiaries. All other trademarks are the property of their respective holders. ROKU, ROKU TV and the ROKU logo are trademarks and the property of Roku, Inc. Other channel logos, brand and product names are trademarks or registered trademarks of their respective holders.

©2017. All rights reserved. Hisense and the Hisense logo are registered trademarks of Hisense. Other brand and product names are registered trademarks of their respective owners.

© 2017 Roku, Inc. All rights reserved. ROKU, ROKU TV and the ROKU logo are trademarks and the property of Roku, Inc. Other channel logos, brand and product names are trademarks or registered trademarks of their respective holders.

Your easy way to endless entertainment

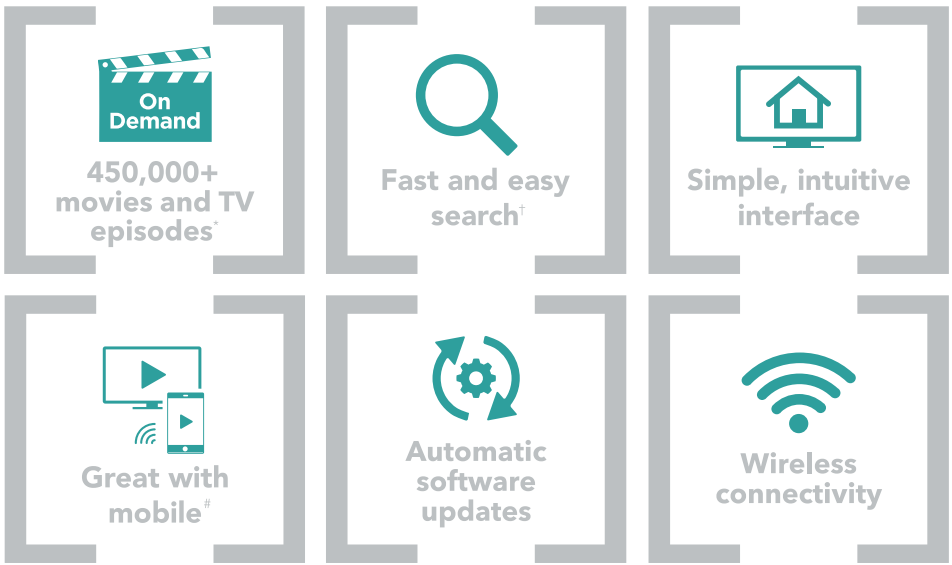

Legal Disclaimers:

** Subscription or other payment may be required to access certain channels. Content may not be available in all areas in which the Roku TVs are sold and channel availability is subject to change.*

† Roku search is for movies and TV shows and does not work with all channels.

 # Limitations apply to the Roku mobile app. Please see support.roku.com for device compatibility information.

WELCOME TO THE HISENSE FAMILY!

Congratulations on the purchase of your new Hisense Roku TV R6 Series! This Quick Start Guide will walk you through a few easy steps to set up your TV.

Because we value your business, we want to keep you in the know of 'all things Hisense'. Using your mobile phone, scan the Registration page QR code to register your TV. Depending on the make and model of your phone, you may need to download a QR code scanning app.

Country	Customer Care Center	Hisense Support Page	REGISTER YOUR TV
U.S.A	• **Phone:** 1-888-935-8880 • **Hours of Operation:** Monday - Friday: 9 AM to 9 PM EST Saturday - Sunday: 9 AM to 6 PM EST • **Service Email:** Service@hisense-usa.com	http://www.hisense-usa.com/support/	http://www.hisense-usa.com/support/register
CANADA	• **Phone:** 1-855-344-7367 • **Hours of Operation:** Monday - Friday: 8 AM to 8 PM EST • **Service Email:** canadasupport@hisense.com	http://www.hisense-canada.com/support/	http://www.hisense-canada.com/support/productReg.asp
MEXICO	• **Phone:** 01-800-008 8880 • **Hours of Operation:** Monday - Friday 9:00-18:00 • **Service Email:** servicio@hisense.com.mx	http://www.hisense.com.mx/support/ *Scan to download user manual	http://www.hisense.com.mx/support/productReg.asp

Disclaimer: *This Quick Start Guide is intended as a general guideline to help you set up your Hisense Roku TV. Images throughout this document are for illustrative purposes only and may differ from the actual product.*

Packaged contents

Your package in which you purchased your new TV contains the following items:

- TV
- Remote Control
- *Quick Start Guide (this document)*
- 2 legs that form the TV stand
- 4 screws (ST4×25C) (for 50")
- 4 screws (M4×25) (for 65")
- Power Cord
- 2 AAA batteries
- *Important Safety Information and Warranty Card leaflet*
- 4 screws (ST4×16) (for 43")
- 4 screws (M4×20) (for 55")

IMPORTANT:

To prevent accidentally discarding items that came with your TV, be sure to **check ALL of the foam** in the carton box.

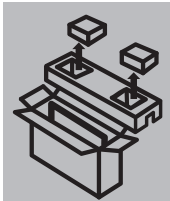

- Please check foam for accessories before discarding.
- Veuillez vérifier la mousse pour qu'il n'y ait pas d'accessoires avant de la jeter.
- Antes de desechar la espuma, asegúrese de retirar todos los accesorios.

Required tools and devices

- Wireless router (not included) for Internet connectivity
- Phillips screwdriver (not included) to secure the TV stand
- HDMI and other types of cables (not included) to connect external devices to the TV
- Wall mount bracket (not included) if you prefer to mount the TV to the wall

Buttons and ports on the Hisense Roku TV

Back View of the TV (43"/50"/55")

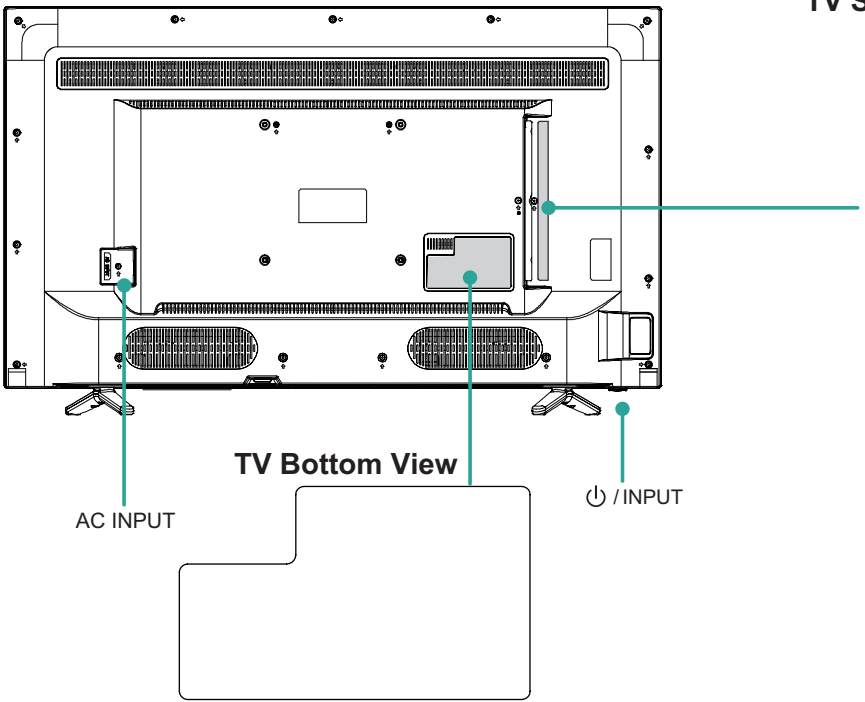

TV Side View

Back View of the TV (65")

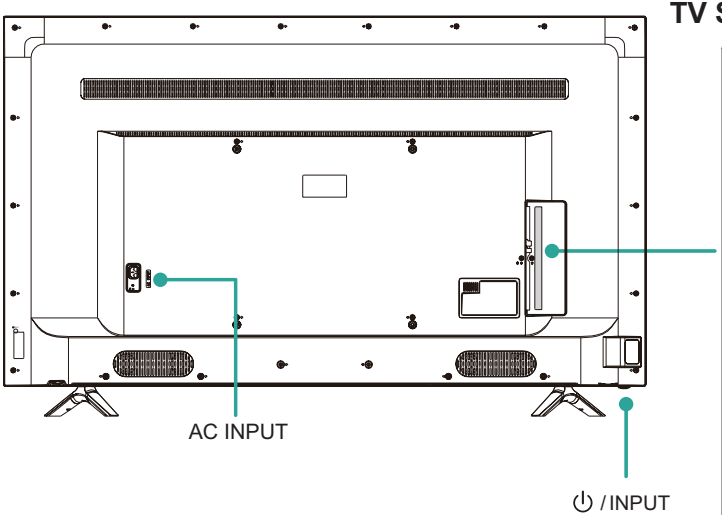

TV Side View

STEP 1. Attach the TV stand or wall mount bracket (not included)

Attach the TV Stand (For steps to attach the wall mount see page 7)

Follow the illustrations and instructions below to complete the installation steps:

1. Carefully place your TV facing down on a soft, flat surface to prevent damage to the TV or scratches to the screen.
2. Remove the two legs (that form the stand) from the accessory bag and then insert them into the bottom slots of the TV.
3. Secure the legs to the TV with the screws in the accessory bag.

for 43"/50"/55"

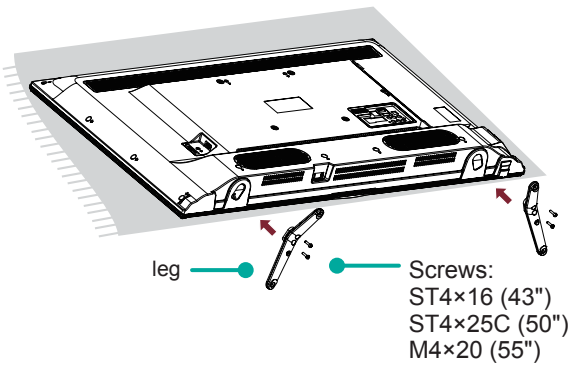

for 65"

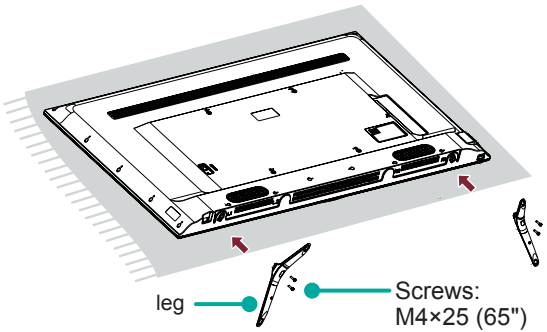

Attach the Wall Mount Bracket (not included)

Before you begin the third-party manufacturer instructions, be sure to do the following things:

1. Place the TV face down on a flat, clean, safe and cushioned surface.
2. Remove the TV stand if you already attached it.
3. Place the spacers (not included) in the corresponding bracket holes.

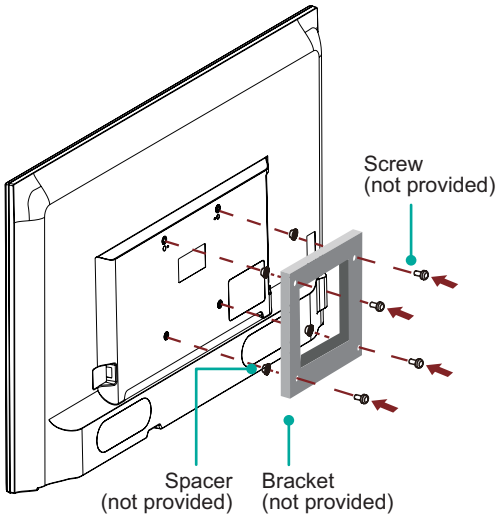

CAUTION:

- **When you attach the mount, be sure to use the spacers (provided by the third-party manufacturer) between the TV and the bracket.**
- **To prevent internal damage to the TV and ensure it is mounted securely, be sure to use fixing screws (not provided) that are 9.5 - 11.5 mm in length when measured from the attaching surface of the mounting hook.**

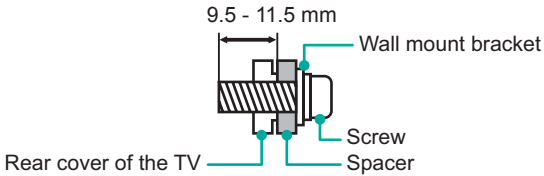

Wall mount hole pattern VESA (mm)	200 × 200 (for 43"/50"/55") 400 × 400 (for 65")
Wall mount screw size (mm)	M6

Follow instructions provided with the Wall mount bracket.

- If you have additional questions, please contact the wall-mount manufacturer or the retailer from which you purchased the TV.
- The selected screws are 9.5 - 11.5 mm in length when measured from the attaching surface of the rear cover.

NOTE: The diameter and length of the screws differ depending on the wall mount bracket model.

STEP 2. Connect devices to your TV

Check to ensure that you have selected the right cables for the ports and that they are connected securely. Loose connections can affect the quality of the picture image and color. (Cables and External Equipment not included.)

TV label		Port	Cable	External Equipment	Brief Description
ANT/CABLE				Antenna; VHF/UHF Antenna, Cable, ANT OUT	Connect an outdoor or indoor antenna.
HDMI				VCR; DVD Player/Recorder; Video Camera; Set-top Box; Satellite antenna cable; Satellite Receiver	Connect a High Definition Multimedia Interface (HDMI®) cable from an external device.
AV IN	VIDEO		Yellow		Connect a composite video cable and left-right audio cables from an external AV device.
	L		White		
	R		Red		
DIGITAL AUDIO OUT				Audio Amplifier; Speaker	Connect a digital audio cable from an external digital audio system.

TV label	Port	Cable	External Equipment	Brief Description
AUDIO OUT / 🎧				Connect headphone for audio out of the TV.
		White Red	Speaker Audio Amplifier	Connect an audio adapter (not provided) from an external analog audio system.
USB DC 5V ⎓ 0.5A(MAX)				Connect a USB device for browsing photos, music and movies. The unit only recognizes a USB Memory Stick.
RESET		Restart or factory reset your TV.		

Buttons on your TV remote

The TV remote should feel right at home in your hand. We designed it to be incredibly intuitive for watching TV and navigating on-screen menus.

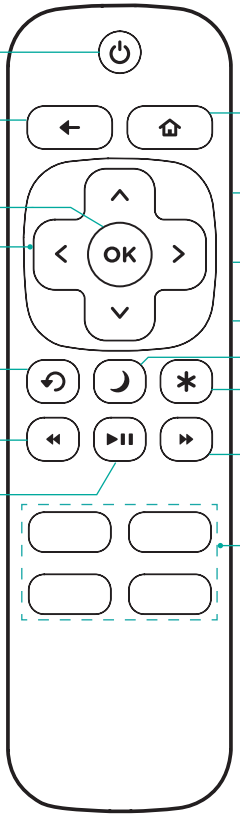

POWER
Turns your TV on or off

BACK
Returns to the previous screen

OK
Select an option from a menu

Directional keypad

CHANNEL RECALL/JUMP BACK AND INSTANT REPLAY
Changes to the previous channel when viewing antenna or cable (no set-top box) programming
Jumps back one position in video when viewing streaming content
Backspaces one letter during menu entries, such as Search

REWIND
Rewind streaming video, jumps to the previous audio track or selection, jumps up one page in menus

PLAY/PAUSE
Pauses or resumes playback

HOME
Displays your TV's Home screen / Stops playback if you are watching TV or streaming content

VOLUME UP (Side view)
Increases the volume or un-mutes the sound

VOLUME DOWN (Side view)
Decreases the volume

MUTE (Side view)
Mutes or un-mutes the sound

SLEEP Sets the sleep timer

VIEW MORE OPTIONS
Gives you easy access to picture settings, display options, and more / Press ✱ on any screen to access options

FAST FORWARD
Fast forwards streaming video, jumps to the next audio track or selection, jumps down one page in menus

STREAMING CHANNELS SHORTCUTS
When you press a button:
- If you have not added the channel, displays a sign up page
- If you have added the channel, displays the channel's home page
- If your TV is off, turns on your TV and displays the channel's home page

Disclaimer: Remotes may vary.

STEP 3. Begin using your remote

Power up your TV remote by inserting the included batteries.

CAUTION

- Dispose of the batteries in a designated disposal area. Do not throw them into a fire.
- Remove old batteries immediately to prevent them from leaking into the battery compartment.
- If you do not intend to use the remote control for a long time, remove the batteries.
- Battery chemicals can cause a rash. If the batteries leak, clean the battery compartment. If chemicals touch your skin, wash it immediately.
- Do not mix old and new batteries.
- Do not mix alkaline, standard (carbon-zinc) or rechargeable (for example, NiCd or NiMH) batteries.
- If your remote gets warm/hot during use, discontinue use and contact customer support immediately at www.hisense-usa.com/support.

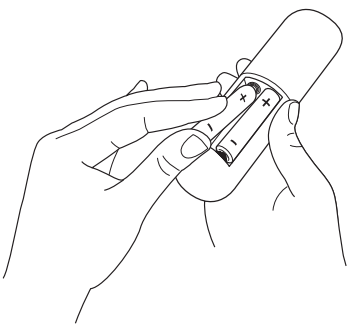

Using Your Cable Set-top Box or Satellite Receiver Remote as a ‘Universal’ Remote.

If you prefer to use your Cable Set-top Box or Satellite Receiver Remote as a ‘Universal Remote’, please refer to the manual that your cable or satellite service provided. It will include instructions on how to program their remote to your television. You can find codes that work with your Hisense Roku TV and the most common cable and satellite provider’s universal remote control at www.roku.com/universalremote.

Turn on the TV

Connect the power cord to the back of your TV and plug it into a power outlet.

for 43"/50"/55"

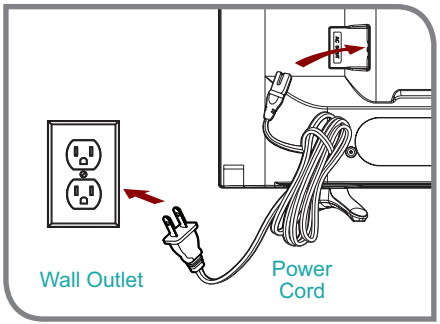

for 65"

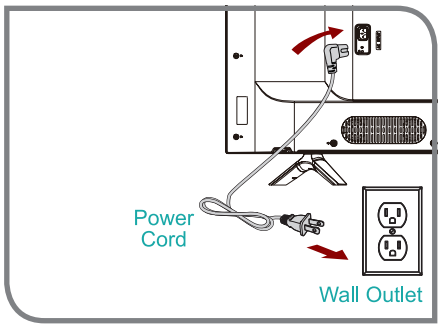

Press the **Power** button on the remote to turn on the TV. A startup screen appears that displays the **Hisense • Roku TV** logo.

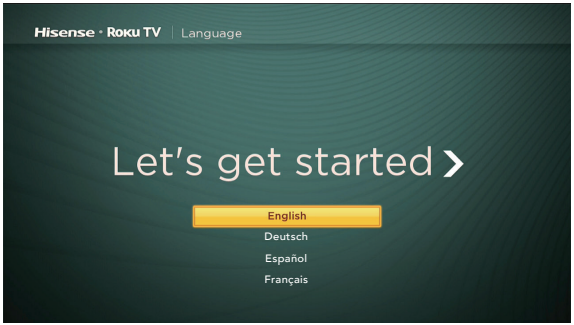

Choose **Set up for home use** to access all TV features and maximize Eco Save.

NOTE: Only retailers that need to set up the TV for display should select **Set up for store use**.

Connect your TV to the Internet to access thousands of streaming channels like Netflix & YouTube.

Make any night a movie night

Access more than 450,000* movies and TV episodes across major streaming services like Netflix, Hulu, Amazon Video, VUDU and more. Choose from free, rental, and subscription services.

Stream sports on the big screen

Choose from over 140 sports channels like WatchESPN, FOX Sports Go, NBA, NFL, MLB, WWE, CBS Sports, and more.

Explore loads of free channels and free trials

Your Roku TV has hundreds of popular free channels like Crackle, CBS News, PBS, VEVO, and more. Plus, take advantage of free trials** to popular subscription services like HBO NOW, SHOWTIME, Netflix, Amazon Video, and Hulu.

Explore your passions

Your Roku TV offers hundreds of streaming channels to fuel your passions – including fitness, kids & family, cooking, sports, religion, travel, International programming and more.

**Subscription or other payment may be required to access certain channels. Content may not be available in all areas in which the Roku TVs are sold and channel availability is subject to change.*

***Cancel before free trial ends to avoid subscription fees. Credit card may be required. Eligibility restrictions may apply.*

STEP 4. Complete the guided setup

Connect your Hisense Roku TV to your home network:

1. **Sign in to your wireless network.** Your TV will automatically detect wireless networks in your area. Have your network name and password handy and follow the easy on-screen instructions.
2. **Activate your Roku account.** From your smartphone, tablet, or computer, go to www.roku.com/link and enter the code that is displayed on your TV screen. Roku accounts are free, and while a valid credit card number is not required to create your account, providing your credit card information makes renting and purchasing entertainment from the Roku Channel Store fast and convenient.

If you are not ready to connect your TV to a wireless network, you can still use it to view live broadcast channels through your antenna, Set Top Box (STB) or Satellite.

Complete the rest of the on-screen prompts and setup is done. Congratulations!

NOTE: Once you're connected, your TV will automatically update with the latest software—plus you can start streaming the entertainment you know and love. Unlike other TVs, your new **Hisense Roku TV** automatically receives regular software updates in the background when it's connected to the Internet. This allows it to give you a better experience.

All software, applications, services and content accessible through the Television belong to providers who are not controlled by or affiliated with Hisense, are protected by copyright, patent, trademark and/or other intellectual property laws and are the sole property of their respective owners. Software, applications, services and content accessible through the Television are at the sole discretion and control of such providers and are completely outside Hisense's control. These services and/or content may be unavailable, discontinued or suspended by such providers, temporarily or permanently, at any time, without liability and without notice to you. HISENSE AND ROKU EXPRESSLY DISCLAIM ANY AND ALL RESPONSIBILITY FOR THE AVAILABILITY, CONTINUITY OF SERVICE, OR THE CONTENT PROVIDED BY ANY OR ALL SUCH PROVIDERS.

STEP 5. Personalize your Home screen

Easily switch between streaming channels and inputs.

The **Home** screen menu lets you access a ton of streaming entertainment, search for streaming movies and TV shows and change your settings.

The grid of tiles on the right lets you visually choose among your favorite streaming channels and the inputs where you have attached devices such as a DVR, game console, antenna, or set top box.

You can easily rearrange the order of the tiles on the Home screen to suit your viewing preferences. Highlight the tile you wish to move and press the * button on your Roku TV remote.

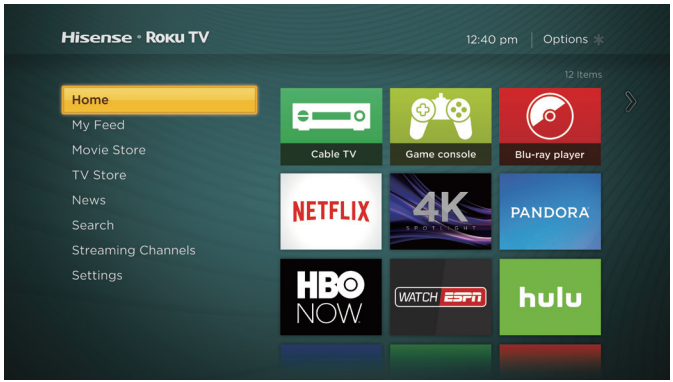

Product specifications

MODEL NAME		43R6D	50R6D	55R6D	65R6D
Dimension (W x H x D)	Without Stand	38.2×22.4×3.5 inches (970×568×88 mm)	44.4×25.7×3.3 inches (1129×654×84 mm)	49.0×28.6×3.3 inches (1244×726×85 mm)	57.6×33.1×3.4 inches (1463×842×87 mm)
	With Stand	38.2×23.8×7.6 inches (970×604×192 mm)	44.4×27.7×9.7 inches (1129×703×247 mm)	49.0×30.4×10.6 inches (1244×773×269 mm)	57.6×37.4×13.9 inches (1463×950×353 mm)
Weight	Without Stand	22.2 lbs (10.1 kg)	29.3 lbs (13.3 kg)	36.2 lbs (16.4 kg)	52.2 lbs (23.7 kg)
	With Stand	22.5 lbs (10.2 kg)	30.0 lbs (13.6 kg)	37.3 lbs (16.9 kg)	54.0 lbs (24.5 kg)
DISPLAY					
Active Screen Size (Diagonal)		42.5 inches	49.5 inches	54.6 inches	64.5 inches
Screen Resolution		3840×2160	3840×2160	3840×2160	3840×2160
Panel Selected		Ultra High Definition backlight	Ultra High Definition backlight	Ultra High Definition backlight	Ultra High Definition backlight
POWER					
Power Supply		AC 120V, 60Hz	AC 120V, 60Hz	AC 120V, 60Hz	AC 120V, 60Hz
Standby Consumption		Less than 1W	Less than 1W	Less than 1W	Less than 1W
Audio Power		7W + 7W	10W + 10W	10W + 10W	12W + 12W

Product specifications (continued)

CHANNELS & SIGNALING	
Receiving Channels	VHF: 2 - 13, UHF: 14 - 69, CATV: 1 - 125 Digital Terrestrial Broadcast (8VSB): 2 - 69 Digital cable (64/256 QAM): 1 - 135
Tuner Type	Frequency synthesized
Receiving System	Analog: NTSC Digital: ATSC/QAM
HDMI Input	RGB/60Hz (640×480, 800×600, 1024×768, 1280×1024, 1360×768, 1440×900, 1680×1050, 1920×1080, 3840×2160) YUV/60Hz (480I, 480P, 720P, 1080I, 1080P, 2160P)
OTHER FEATURES	
Parental Control	Yes
HD Supported Definitions	480i, 480P, 720P, 1080i,1080P, 2160P
Sleep Timer	Yes
Wall Mount Support	VESA Standard (excluded)
Wireless Built In	Yes
Environmental Conditions	Temperature: 41°F - 95°F (5°C - 35°C) Humidity: 20% - 80% RH Atmospheric pressure: 86 kPa - 106 kPa

Quick problem-solving tips

When you experience an issue with your TV, turn it off and on again. If this does not resolve the problem, then refer to the tips below. If the problem is still not resolved, then contact us at one of the phone numbers on Page 2.

SOUND OR PICTURE ISSUES	POSSIBLE SOLUTIONS
You do not see a picture when turning on the TV	• Check if the LED light is on. If it is, then there is power to the TV. • The TV may be in Standby mode. Press the **Power** ⏻ button on the remote control to activate the unit from Standby. • Check if the power cord is plugged into an active electrical outlet.
You have connected an external source to your TV but can not find it on the **Home** screen	• Make sure your external source is turned on. • Check to see if the correct input tile is selected on the **Home** Screen for the external source you want to view. • Check to see if the external source device connection is snug and fully inserted into the TV port.
When you turn on your TV, there is a delay for a few seconds before the picture appears	• This is normal. If you have already set up your TV, it is initializing and searching for previous setting information.
You see a normal picture but do not hear any sound	• Check that volume is turned up. • Check if “Mute” mode is ON. Turn off mute by pressing the **Mute** 🔇 button again, or pressing volume up.
You hear sound but picture color is faded or in black and white	• Check that the Color value is set to 50 or greater. • Check the color on another channel or input tile.
Your sound or picture is distorted or appears wavy	• Turn off and/or remove any electrical appliance that may be nearby the TV panel. • Insert the power plug of the TV set into another power outlet.

Quick problem-solving tips (continued)

SOUND OR PICTURE ISSUES	POSSIBLE SOLUTIONS
Your sound or picture is blurry or cuts out	• If you are using an external antenna, check the connections for a snug and tight fit. • Adjust or reposition the antenna placement.
You see horizontal/vertical stripes on the picture, or it is shaking	• Turn off and/or remove any electrical appliance that may be nearby the TV panel. • Insert the TV power cord into another electrical outlet.

CONNECTIVITY ISSUES	POSSIBLE SOLUTIONS
You cannot connect to your wireless network	• Make sure you have selected the correct wireless network name on the **Choose Wireless Network** screen. • Make sure that you entered the correct wireless password for your network (passwords are case sensitive). • If you have turned off SSID broadcasting on your wireless router, add your network by selecting **Add Private Network** from the **Select Wireless Network** screen. • To check if it is a password problem, temporarily disable security on the wireless router. • If you are not getting 3 or more signal strength bars above the wireless network icon, adjust the position of the TV (if possible) or the wireless router. Even a few inches in one direction or another may help.

REMOTE CONTROL ISSUES	POSSIBLE SOLUTIONS
Your remote control is not responding to button presses	• Check that the TV is still on. • Check that the batteries are good and are inserted properly. • Check that there are no obstacles between the remote control and the front of the TV. • Try moving closer to the TV. If the LED on the TV flashes when you press any of the buttons on the remote control, the issue is not with the remote control.

Certification and Compliance

FCC Notice

This device has been tested and found to comply with the limits for a Class B digital device pursuant to Part 15 of the FCC Rules. These limits are designed to provide reasonable protection against harmful interference in a residential installation. This device generates, uses, and can radiate radio frequency energy and, if not installed and used in accordance with the instructions, may cause harmful interference to radio communications.

However, there is no guarantee that interference will not occur in a particular installation. If this device does cause harmful interference to radio or television reception, which can be determined by turning the device off and on, the user is encouraged to try to correct the interference by one or more of the following measures:

- Reorient or relocate the receiving antenna.
- Increase the separation between the device and receiver.
- Connect the device into an outlet on a circuit different from that to which the receiver is connected.
- Consult the dealer or an experienced radio/TV technician for help.

NOTE: The manufacturer is not responsible for any radio or TV interference caused by unauthorized modifications to this equipment. Such modifications could void the user's authority to operate the equipment.

The WiFi Module complies with FCC radiation exposure limits set forth for an uncontrolled environment. This device should be installed and operated with a minimum distance of 20 centimeters between the radiator and your body.

Manufactured under license from Dolby Laboratories. Dolby, Dolby Audio, and the double-D symbol are trademarks of Dolby Laboratories.

The terms HDMI and HDMI High-Definition Multimedia Interface, and the HDMI Logo are trademarks or registered trademarks of HDMI Licensing LLC in the United States and other countries.