ES-

Hisense

75H10D

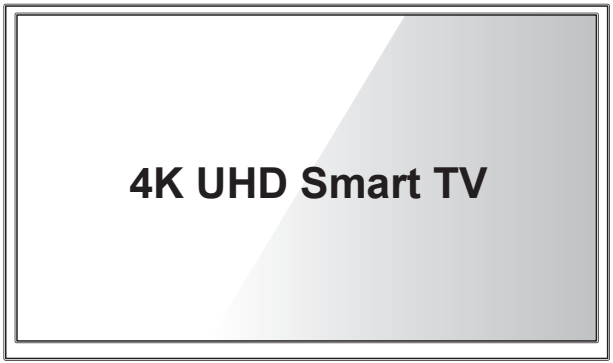

Quick Start Guide

Help Hisense improve the environment by reducing paper waste.
For detailed instructions and feature descriptions, access the full User Manual online.
Before using the TV, please read this guide carefully and keep it for future reference.

© 2017 Hisense Company Ltd. All Rights Reserved.

All material in this Quick Start Guide is the property of Hisense Company Ltd. and its subsidiaries, and is protected under US, CANADA, MEXICO and International copyright and/or other intellectual property laws. Reproduction or transmission of the materials, in whole or in part, in any manner, electronic, print, or otherwise, without the prior written consent of Hisense Company Ltd. is a violation of Hisense Company Ltd. rights under the aforementioned laws.

No part of this publication may be stored, reproduced, transmitted or distributed, in whole or in part, in any manner, electronic or otherwise, whether or not for a charge or other or no consideration, without the prior written permission of Hisense Company Ltd.

Requests for permission to store, reproduce, transmit or distribute materials may be made to one of the following addresses:

USA: Hisense USA Corporation
PO Box 3289
Suwanee, GA 30024

CANADA: Hisense Canada Co., Ltd
2283 Argentia Road, Unit 16
Mississauga, ON, Canada
L5N 5Z2

MEXICO: Hisense Mexico S. de R.L. de C.V.
Blvd. Miguel de Cervantes Saavedra No 301
Torre Norte Piso 2, Col. Ampliación Granada
Miguel Hidalgo, Ciudad de México, C.P. 11520

Hisense, and any and all other Hisense product names, logo's, slogans or marks are registered trademarks of Hisense Company Ltd. and its subsidiaries. All other trademarks are the property of their respective holders.

Table of Contents

Register Your TV! 2
Packaged Contents 3
Buttons and Ports on the TV 4
Attach the TV Stand or Wall Mount Bracket 5
Connect Devices to your TV 8
Establish a Network Connection 10
Buttons on your TV Remote 12
Begin Using your Remote 13
Power on the TV 14
Complete the First-Time Setup Menu 15
Begin to Enjoy your TV 16
Product Specifications 17
Quick Problem-Solving Tips 18
Certification and Compliance 20

Register Your TV!

Congratulations on the purchase of your new TV! This Quick Start Guide will walk you through a few easy steps to set up your TV. For detailed instructions, access the User Manual on the support pages listed below.

Because we value your business, we want to keep you in the know of 'all things Hisense'. Using your mobile phone, scan the Registration page QR code to register your TV. Depending on the make and model of your phone, you may need to download a QR code scanning app.

Country	Customer Care Center	Hisense Support Page	REGISTER YOUR TV
U.S.A	• **Phone:** 1-888-935-8880 • **Hours of Operation:** Monday - Friday: 9 AM to 9 PM EST Saturday - Sunday: 9 AM to 6 PM EST • **Service Email:** Service@hisense-usa.com	http://www.hisense-usa.com/support/	https://www.hisense-usa.com/support/register
CANADA	• **Phone:** 1-855-344-7367 • **Hours of Operation:** Monday - Friday: 8 AM to 8 PM EST • **Service Email:** canadasupport@hisense.com	http://www.hisense-canada.com/support/	http://www.hisense-canada.com/support/productReg.asp
MEXICO	• **Phone:** 01-800-008 8880 • **Hours of Operation:** Monday - Friday 9:00-18:00 • **Service Email:** servicio@hisense.com.mx	http://www.hisense.com.mx/support/ *Scan to download user manual	http://www.hisense.com.mx/support/productReg.asp

Disclaimer: *This Quick Start Guide is intended as a general guideline to help you set up your TV. Images throughout this document are for illustrative purposes only and may differ from the actual product.*

PACKAGED CONTENTS

Your package in which you purchased your new TV contains the following items:

- TV
- Power Cord
- Remote Control
- Front Base
- Cover Plate
- 6 Screws (M5×12)
- Quick Start Guide (this document)
- set of AAA batteries
- Important Safety Information and Warranty Card
- Back Base
- 8 Screws (M4×10)

IMPORTANT:

To prevent accidentally discarding items that came with your TV, be sure to **check ALL of the foam** in the carton box.

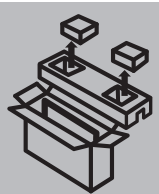

· Please check foam for accessories before discarding.
· Veuillez vérifier la mousse pour qu'il n'y ait pas d'accessoires avant de la jeter.
· Antes de desechar la espuma, asegúrese de retirar todos los accesorios.

Required tools and devices

- Wireless router (not included) for Internet connectivity
- Phillips screwdriver (not included) to secure the TV stand
- HDMI and other types of cables (not included) to connect external devices to the TV
- Wall mount bracket (not included) if you prefer to mount the TV to the wall

BUTTONS AND PORTS ON THE TV

Back View of the TV

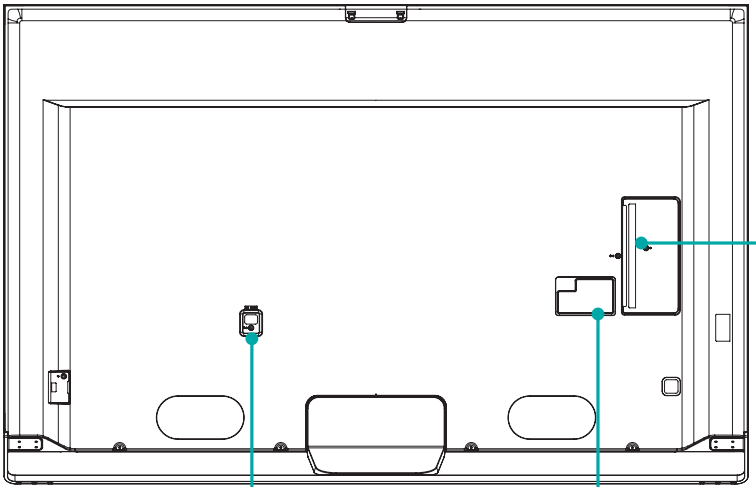

Power Input

TV Bottom View

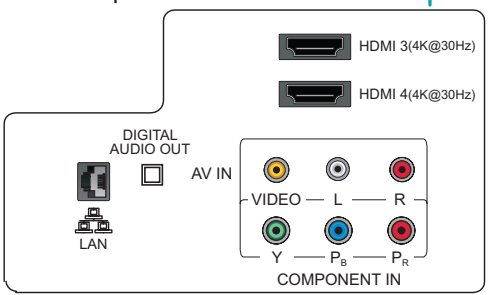

TV Side View

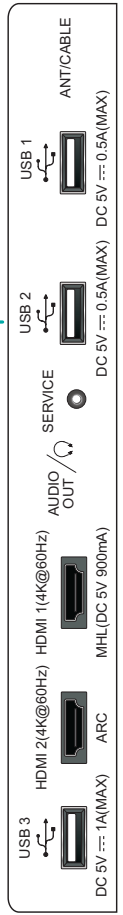

STEP 1. Attach the TV Stand or Wall Mount Bracket

Attach the TV Stand

CAUTION:

- Be sure to disconnect the A/C power cord before removing a base stand or installing Wall-Mount brackets.
- The screen display is very fragile, and must be protected at all times when installing the base stand. Be sure that no hard or sharp object, or anything that could scratch or damage the screen display, comes into contact with it. DO NOT exert pressure on the front of the TV at any time because the screen could crack.

Follow the illustrations and instructions below to complete the installation steps:

1. Carefully place your TV face-down on a soft, flat surface to prevent damage to the TV or scratching to the screen.
2. Remove the screws of the base covers as shown in figure, and then take away the two base covers.

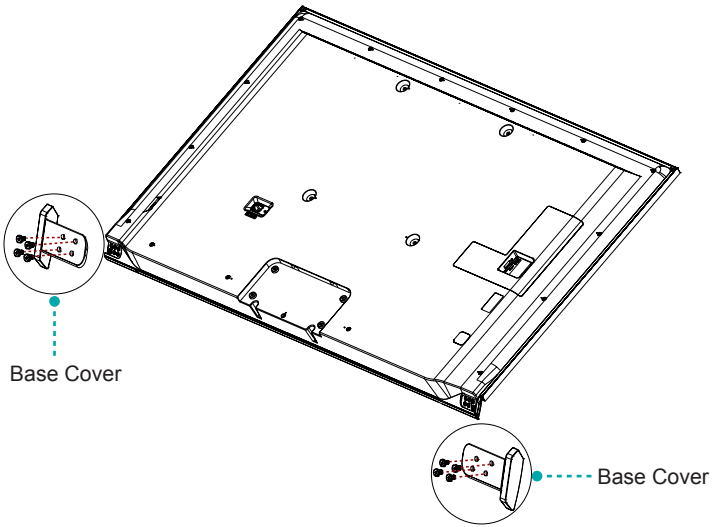

3. Take out the front base, put the side with spacer face to you and secure it to the TV with the 8 provided screws in the accessory bag.

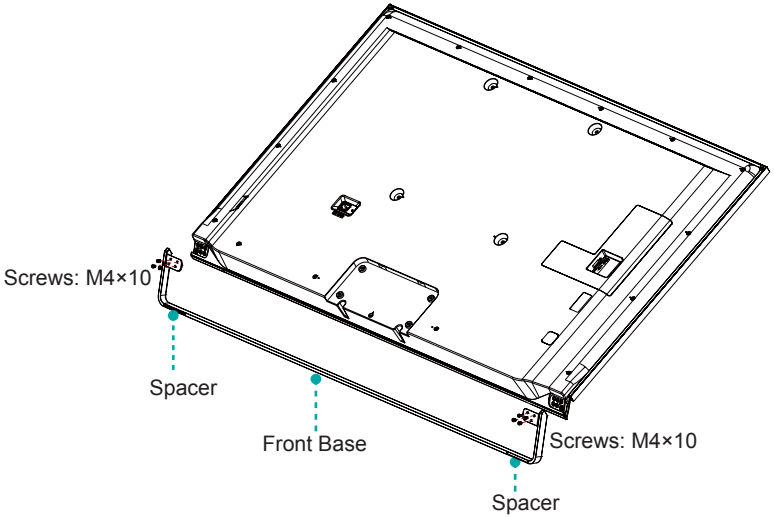

4. Take out the back base, secure it to the TV with the 6 provided screws in the accessory bag and then fix the cover plate (magnet adsorption).

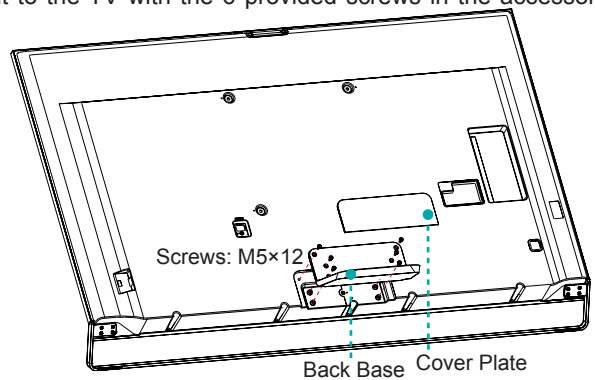

Attach the Wall Mount Bracket (not included)

Before you begin the third-party manufacturer instructions, be sure to do the following things:

1.Place the TV face down on a clean, safe and cushioned surface.
2.Remove the TV stand if you already attached it.
3.Place the spacers (not included) in the corresponding bracket holes.

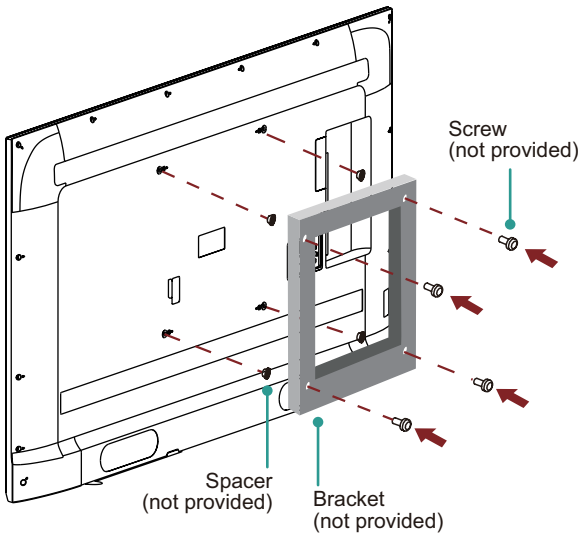

CAUTION:

- **When you attach the mount, be sure to use the spacers (provided by the third-party manufacturer) between the TV and the bracket.**
- **To prevent internal damage to the TV and ensure it is mounted securely, be sure to use fixing screws (not provided) that are 9.5 - 11.5 mm in length when measured from the attaching surface of the mounting hook.**

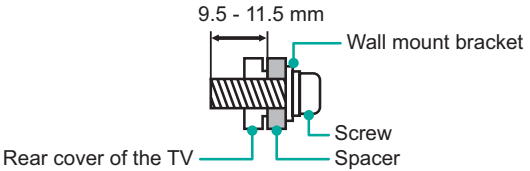

Wall mount hole pattern VESA (mm)	400 × 400
Wall mount screw size	M6

Follow instructions provided with the Wall mount bracket.

- To complete the installation, please contact the wall-mount manufacturer or the retailer from which you purchased the TV.
- The selected screws are 9.5 - 11.5 mm in length when measured from the attaching surface of the rear cover.

NOTE: The diameter and length of the screws differ depending on the Wall-mount bracket model.

STEP 2. Connect devices to your TV

Check to ensure that you have selected the right cables for the ports and that they are connected securely. Loose connections can affect the quality of the picture image and color.

TV label		Port	Cable	External Equipment	Brief Description
ANT/CABLE				Antenna; VHF/UHF Antenna Cable ANT OUT	Connect an outdoor VHF/UHF antenna.
HDMI				VCR; DVD Player/Recorder; Video Camera; Set-top Box; Satellite antenna cable; Satellite Receiver	This 4K TV has two different software versions of HDMI ports to connect HDMI-enabled devices. The two high-powered HDMI version 2.0(HDMI 1, HDMI 2) inputs enable you to connect 4K Ultra-HD external devices that require more bandwidth to transmit to the TV screen. For example, if you have an X-box or Blu-ray player that supports the 2.0 standard. The two HDMI version 1.4 inputs are great for any of your external devices that support a standard full high-definition resolution of 1080p.
COMPO-NENT IN	Y		Green		Connect a component video cable and left-right audio cables from an external AV device.
	P_B		Blue		
	P_R		Red		
	L		White		
	R		Red		
AV IN	VIDEO		Yellow		Connect a composite video cable and left-right audio cables from an external AV device.
	L		White		
	R		Red		

TV label	Port	Cable	External Equipment	Brief Description
DIGITAL AUDIO OUT			Audio Amplifier Speaker	Connect an optical cable from an external digital audio system.
AUDIO OUT/ 🎧				Connect headphones to hear audio from the TV.
		White Red	Speaker Audio Amplifier	Connect an audio adapter (not provided) from an external analog audio system.
USB				Connect a USB 3.0 device to transfer photos, music and movies to your TV at a rate that's 10 times faster than the USB 2.0 port NOTE: You can still plug a USB 2.0 device into a USB 3.0 port; however, the rate of speed will not be as fast. USB 3.0 devices are also backwards compatible with USB 2.0 ports.
LAN			LAN	Connect an Ethernet cable to access a network or the Internet. The TV also has a wireless connectivity feature.
SERVICE		This port is not available for you to connect an external device. It can only be used by our factory for testing purposes.		

STEP 3. Establish a network connection

1. Press the **[ ]** button on the remote control, press**[∨]** button to select **Settings** and then press **[OK]** to enter the Settings menu.
2. Select **Network** → **Network Configuration**.

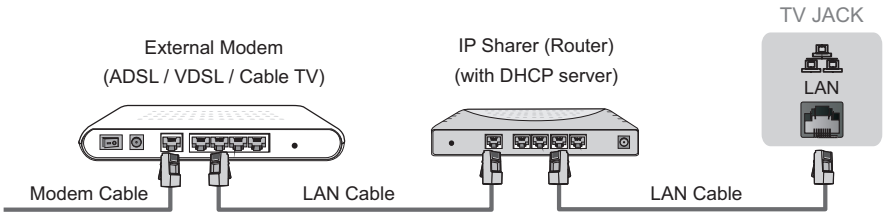

Establish a wired network connection

Automatically obtain an IP address

1. Select **Ethernet**. The TV will automatically obtain an IP address and connect to the network.
   NOTE: The default option of IP Settings Mode is DHCP.
2. If the connection fails then "**Disconnected**" will display for the Ethernet status. Retry or enter the **IP Settings**, select **Manual** to input the information again.

Manually enter the IP address

1. Select **Manual**.
2. Enter the IP Address, Netmask, Gateway, DNS Server 1 and DNS Server 2 in the menu. Next, select **Save**.

Establish a wireless network connection

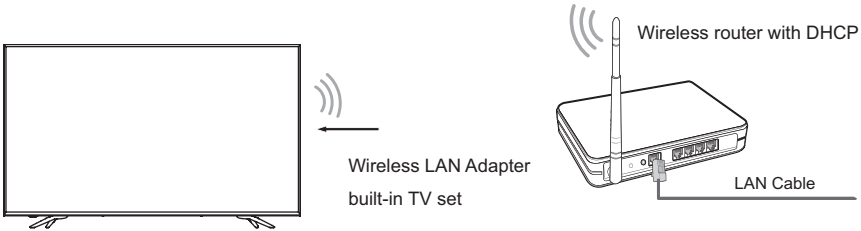

The TV can directly receive network signals via wireless router

1. Select **Wireless**. The list of networks will be displayed automatically.
2. Select a wireless network from the list, input the password and select **Connect**.
3. If the network connection does not appear in the list, select **Refresh** to refresh the list or select **Add** to manually enter SSID and Security mode selection

Close the network connection

Select **Off**. The network connection will close.

Buttons on your TV remote

BUTTON	DESCRIPTION
⏻	Power on / off
INPUT	Change TV input source
Number	Enter Channels / input numbers
CC	Turn Closed Caption On/Off
—	Dash button / Select a digital sub-channel
▬ (Red / Green / Yellow / Blue)	Special function buttons
TV	Live TV
🗨	The button for the Quick setup menu
∧ / ∨ / < / >	D-pad (up/down/left/right navigation buttons)
OK	Confirmation button
BACK	Return to the previous place in the menu or app
EXIT	Exit the application

BUTTON	DESCRIPTION
⌂	Display the Home screen
+ VOL −	Volume (up/down)
+ CH −	Channel (up/down)
🔇	Mute and restore sound
MTS	Set the audio language(MTS)
◀◀ / ▶ / ▶▶ / ■ / ❚❚	Media content control function buttons
NRT	Choose to leave the Video description feature On or Off
APP	Quick access buttons to apps

NOTE: The buttons are only for reference, actual remote may vary in appearance.

STEP 4. Begin using your remote

1. Slide the back cover to open the battery compartment of the remote control

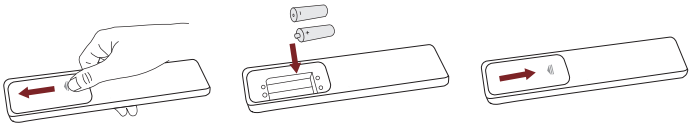

Gently push and slide | Insert the batteries | Gently push and slide

2. Insert two AAA size batteries. Make sure to match the (+) and (-) ends of the batteries with the (+) and (-) ends indicated in the battery compartment.
3. Replace the battery compartment cover.

Important Information about the remote and batteries

- **Discard batteries in a designated disposal area. Do not throw them into a fire.**
- **Remove old batteries immediately to prevent them from leaking into the battery compartment.**
- **If you do not intend to use the remote control for a long time, then remove the batteries.**
- **Battery chemicals can cause a rash. If the batteries leak, clean the battery compartment with a cloth. If chemicals touch your skin then wash it immediately.**
- **Do not mix old and new batteries.**
- **Do not mix alkaline, standard (carbon-zinc) or rechargeable (NiCd, NiMH, etc.) batteries.**
- **Do not continue using the remote if it gets warm or hot. Call our Support Center immediately on the support website.**

Remote Control Range Information

- The remote control can work at a distance of up to 26 feet in front of the TV set.
- It can work at a 30 degree horizontal or vertical angle.

Program Your Universal Cable or Satellite Remote Control to Operate Your New Television (only for USA)

If you would like to program your other household remote controls to your new television, please refer to the User Manual supplied by your Cable or Satellite provider. It should include instructions on how to program their remote to your television. A list of codes for the most common Cable and Satellite providers are listed below. Use the code that is associated with your Cable or Satellite provider (if applicable).

DIRECTV.....0178, 10178, 10019, 10748, 11314, 11660, 11710, 11780, 12049, 10171, 11204, 11326, 11517, 11564, 11641, 11963, 12002, 12183

Time Warner Cable.....386, 0178, 10178, 400, 450, 461, 456, 0748, 1463, 0463, 10463

Comcast.....0178, 10178, 10463, 11463, 10748, 11314, 11660, 10171, 11204, 11326, 11517, 11641, 11780, 11785, 11892, 11963, 12002
Cox Communications.....0178, 10178, 1326, 1463
Dish Network.....505, 627, 538, 720, 659
If the code associated with your Cable or Satellite provider is not listed, does not work or you cannot locate the instructions to program your remote, call your local Cable or Satellite provider's customer service center.
If your Cable or Satellite provider does not have a code available, please contact us at one of the phone numbers on Page 2.

Using Your Cable Set-top Box or Satellite Receiver Remote as a 'Universal' Remote

If you prefer to use your Cable Set-top Box or Satellite Receiver Remote as a 'Universal Remote', then visit the Support page to view a list of the codes.

STEP 5. Power on the TV

Plug the power cord into a wall outlet.

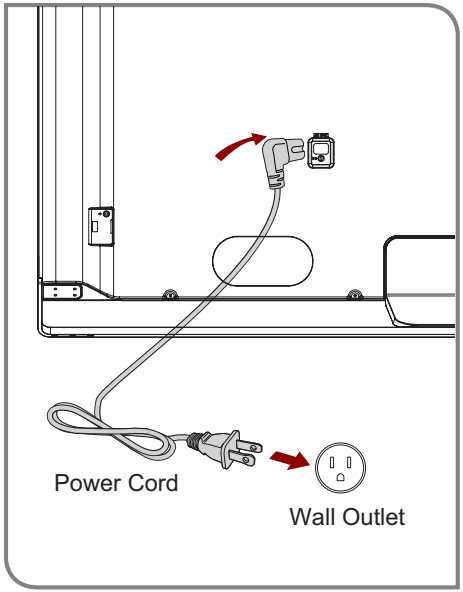

Press the **Power button** ⏻ on the remote to turn on the TV. A splash screen that shows the logo appears. Next, the First-Time Setup Menu begins by prompting you to choose your **Language**, **Country**, and **Time Zone**.

STEP 6. Complete the first-time setup menu

After the splash screen that shows the logo appears, begin the first-time setup menu.

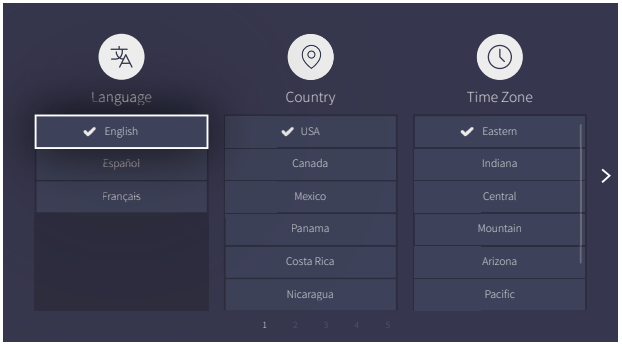

Screen	Task
Language and Location	• Using the D-pad arrows of your remote, chooseyour **Language**, **Country** and **Time Zone**.
End User License Agreement	• Choose **Decline** or **Agree**, then select **Confirm** icon and press **[OK]**.
TV Usage	• Select **Home Mode** (which appears by default). • **NOTE:** 'Store mode' should only be selected by Retailers who plan to demonstrate the TV.
Network Connection	• If your TV does not automatically detect an Ethernet connection, then use a wireless network. Select your network from the list that displays, input the password. Also you can add a hidden network.

Screen	Task
Select your primary input source	Select how you receive your TV channels. Choose from one of the following sources below. • HDMI • ANT/CABLE • AV • COMPONENT • NONE **TIP:** If you use an antenna to receive channels, then you must complete the first-time setup menu in order to run a channel scan.

STEP 7. Begin to enjoy your TV

Your Smart TV is easy to use and brag-worthy!

Now that you've completed the first-time setup menu, the Home screen is your starting point for navigating the TV. Gone are the days where your TV only provides one way for you to be entertained. This showpiece provides you the convenience of watching a program on a live channel, accessing Video on Demand to watch a movie and many other entertainment options.

Using your remote, press the **Home** button to begin enjoying your TV.

Disclaimer: *Subscriptions or other payments may be required to access content through some applications. Some or all of the included or downloaded application services in this Hisense device may not function depending on the Internet connection, local limitations of included applications or other reasons outside of Hisense's control. HISENSE EXPRESSLY DISCLAIMS RESPONSIBILITY FOR ANY APPLICATION SERVICE FROM FUNCTIONING AT ANY TIME, FOR CONTENT IN ANY APPLICATION SERVICE, FOR DISRUPTIONS OF SERVICE, LOCAL OR REGIONAL LIMITATIONS, WARRANTIES OF TITLE, NO INFRINGEMENT, AND FOR IMPLIED WARRANTIES OF MERCHANTABILITY OR FITNESS FOR A PARTICULAR PURPOSE. By purchasing this device, you accept such Disclaimer without any claim on Hisense at any time.*

PRODUCT SPECIFICATIONS

Model Name		**75H10D**
Dimension (W × H × D)	Without Stand	66.0 × 39.6 × 4.5 inches (1677 × 1005 × 114 mm)
	With Stand	66.0 × 41.9 × 13.8 inches (1677 × 1065 × 350 mm)
Weight	Without Stand	98.1 lbs (44.5 kg)
	With Stand	108.0 lbs (49 kg)
Active Screen Size (Diagonal)		74.5 inches
Screen Resolution		3840 × 2160
Audio Power		15 W + 15 W
Power consumption		450W
Power Supply		120 V ~ 60 Hz
Connectivity		Built-in Wireless feature (2x2 dual band)
Key Apps		Netflix, Vudu, YouTube, Amazon Instant Video, Pandora and Opera App (Some apps only for USA)
Ports		4 HDMI ports, 3 USB ports, 1 LAN port for Ethernet, 1 Digital Audio Output, 1 RF Input, 1 Earphone Audio Output, 1 RCA Composite Video Input , 1 left/right Audio Input for Composite, 1 RCA Component Video Input
Other features		Smart TV, Dynamic contrast Picture, VESA standard wall mount support, Web browser, Parental Control and Closed Caption, High Dynamic Range (HDR*)

*HDR viewing experience will vary by model, content availability and Internet connection.

Disclaimer: *All products, product specifications, and data are subject to change without notice to improve reliability, function, design or otherwise.*

QUICK PROBLEM-SOLVING TIPS

When you experience an issue with your TV, turn it off and on again. If this does not resolve the problem, then refer to the tips below. If the problem is still not resolved, then contact us at one of the phone numbers on Page 2.

ISSUES	POSSIBLE SOLUTIONS
No sound or picture	• Check if the power cord is plugged into a powered AC outlet. • Press the ⏻ **Power button** on the remote control to activate the unit from 'Standby' mode. • Check to see if the LED light is on or not. If it is, then the TV is receiving power.
I have connected an external source to my TV and I get no picture and/or sound.	• Check for the correct output connection on the external source and for the correct input connection on the TV. • Make sure you have made the correct selection for the input mode for the incoming signal.
When I turn on my TV, there is a delay for a few seconds before the picture appears. Is this normal?	• Yes, this is normal. The TV is initializing and searching for previous setting information.
The picture is normal but there is no sound	• Check the volume settings. • Check if 'Mute' mode is set to **On**.
Sound but no picture or black and white picture	• If the picture is black and white, unplug the TV from the AC outlet and replug it after 60 seconds. • Check that the Color is set to 50 or higher. • Try different TV channels.
The sound and/or picture is distorted or appears wavy	• An electric appliance may be affecting the TV. Turn off any appliances that are nearby and move it farther away from the TV. • Insert the power plug of the TV set into another power outlet.
The sound and picture is blurry or cuts out	• If using an external antenna, check the direction, position and connection of the antenna. • Adjust the direction of your antenna or reset or fine tune the channel.
A horizontal or vertical stripe appears on the picture and/or the picture is shaking	• Check if there is an appliance or electric tool nearby that is causing interference.

The plastic cabinet makes a "clicking" type of sound	• The 'click' sound can occur when the temperature of the television changes. This change causes the television cabinet to expand or contract, which makes the sound. This is normal and the TV is OK.
The remote control does not work	• Confirm that TV still has power and is operational. • Change the batteries in the remote control. • Check if the batteries are correctly installed.

Need more help?

Additional help is available online at support links on Page 2. You will find answers to frequently asked questions, downloadable firmware and more.

Certification and Compliance

FCC Notice

This device has been tested and found to comply with the limits for a Class B digital device pursuant to Part 15 of the FCC Rules. These limits are designed to provide reasonable protection against harmful interference in a residential installation. This device generates, uses, and can radiate radio frequency energy and, if not installed and used in accordance with the instructions, may cause harmful interference to radio communications. However, there is no guarantee that interference will not occur in a particular installation. If this device does cause harmful interference to radio or television reception, which can be determined by turning the device off and on, the user is encouraged to try to correct the interference by one or more of the following measures:

- Reorient or relocate the receiving antenna.
- Increase the separation between the device and receiver.
- Connect the device into an outlet on a circuit different from that to which the receiver is connected.
- Consult the dealer or an experienced radio/TV technician for help.

NOTE: The manufacturer is not responsible for any radio or TV interference caused by unauthorized modifications to this equipment. Such modifications could void the user's authority to operate the equipment.

The Wi-Fi Module complies with FCC radiation exposure limits set forth for an uncontrolled environment. This device should be installed and operated with a minimum distance of 20 centimeters between the radiator and your body.

Manufactured under license from Dolby Laboratories. Dolby, Dolby Audio, and the double-D symbol are trademarks of Dolby Laboratories.

The terms HDMI and HDMI High-Definition Multimedia Interface, and the HDMI Logo are trademarks or registered trademarks of HDMI Licensing LLC in the United States and other countries.

Manufactured under license from THAT Corporation. THAT Corporation, dbx-tv, Total Sonics, Total Surround and Total Volume are registered trademarks of THAT Corporation. Total Technology is a trademark of THAT Corporation.

©2017. All rights reserved. Hisense and the Hisense logo are registered trademarks of Hisense. Other brand and product names are registered trademarks of their respective owners.