PROFESSIONAL 3G WEATHER STATION

Operation Manual

Note: The stainless steel pole is not included

Contents

Introduction....2
Package Content:....2
Outdoor 7-in-1 sensor array:....3
Indoor sensor:....3
Receiver unit....4
Solar panel Unit....5
Installation....5
Outdoor unit....5
Install wind vane....5
Install wind speed....6
Install Batteries....7
Mount outdoor sensor....7
Indoor Sensor....8
Sensor Set up....8
Sensor Placement....9
Initial Receiver Unit Set Up....10
USB Configure Tool Operation....12
1. Setup Menu....13
1.1 Basic Settings....14
1.2 Alarm....15
1.3 Calibration....15
1.4 Rain....18
1.5 Mobile Network....19
2. Record Menu....19
2.1 Max/Min....20
2.2 SDCard File....20
3. Upload....22
4. Update Firmware....22
5. Factory Reset....23
Mobile Phone Control via SMS....24
SMS data from station....26
Weather Server....28
Maintenance....30
Troubleshooting Guide....31
Specifications....33
FCC Statement....34
Warranty Information....35

Introduction

Thank you for your purchasing this professional weather station. This device is working based on WCDMA /GSM network. It can be configured to send data to a specified server by WCDMA/GSM so that users can run remote monitoring of weather condition.

This manual will guide you step-by-step through setting up your device. Use this manual to become familiar with your professional weather station, and save it for future reference.

The device can measure the below weather data and transmit them to web:www.wunderground.com by WCDMA/GSM network.

1. **Wind direction**
2. **Wind speed**
3. **Solar radiation rate**
4. **UV index**
5. **Absolute pressure**
6. **Relative pressure**
7. **Gust**
8. **Indoor Temperature**
9. **Indoor Humidity**
10. **Outdoor Temperature**
11. **Outdoor Humidity**
12. **Dew point**
13. **Rain fall**

Package Content:

It includes a receiver with built in WCDMA module, a 7-in-1 outdoor sensor array, an indoor temperature & humidity sensor and a solar panel. Below please find the package content:

QTY	Item
1	Receiver unit
1	Outdoor sensor(Thermo-hygrometer / Rain Gauge / Wind Speed & direction Sensor /Transmitter)
1	Wind Vane
1	Solar panel Unit
1	Indoor temperature & humidity sensor
1	USB cable
1	5 meter connection cable for solar panel to connect to Receiver
1	User manual

Outdoor 7-in-1 sensor array:

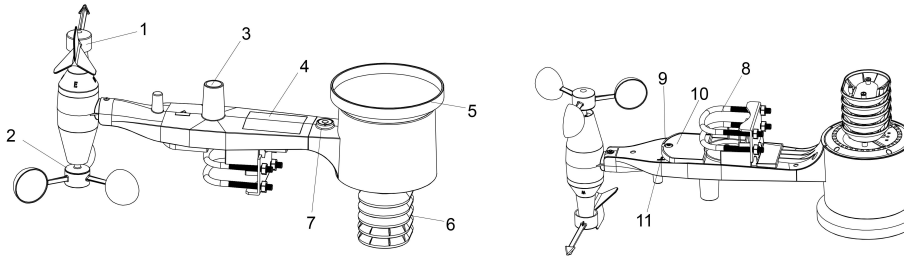

1. Wind Vane
2. Wind Speed Sensor
3. UV sensor/ Light sensor
4. Solar panel
5. Rain collector
6. Thermo-hygro sensor
7. Bubble level
8. U-Bolt
9. LED Indicator: light on for 4s if the unit power up. Then the LED will flash once every 16 seconds (the sensor transmission update period).
10. Battery compartment
11. Reset button

Indoor sensor:

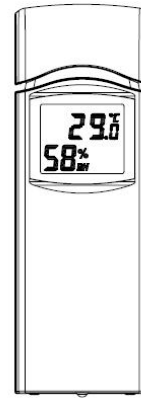

Receiver unit

Outside

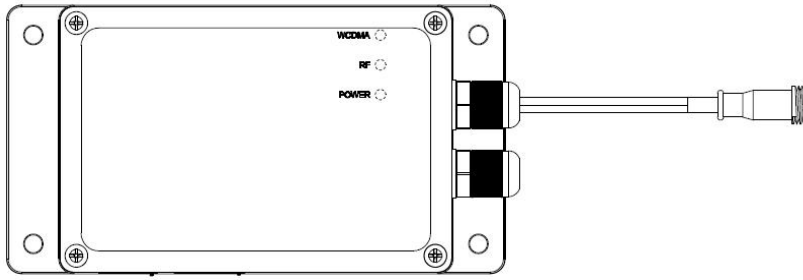

Inside

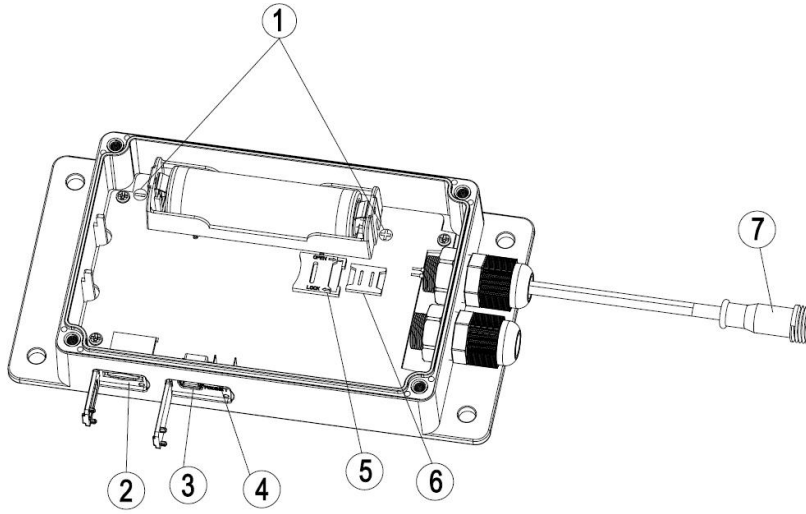

1. +/- electrode symbol of battery
2. TF card slot
3. USB interface
4. Reset button
5. Micro SIM card slot
6. Nano SIM card slot
7. Connector for solar power unit

Solar panel Unit

The solar panel base is to be connected to the power connector for receiver via a 2 core 5 meter extending cable.

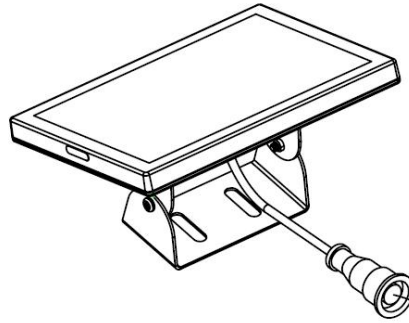

Installation

Before placing and installing all components of the weather station at their final destination, please set up the weather station with all parts being nearby for testing the correct function. Also please note configuring parameters on PC software is necessary before permanent installation. (Refer to USB Configure Tool Operation part).

Outdoor unit

Install wind vane

Push the wind vane into the shaft. as shown in figure 1.
Tighten the set screw with as shown in figure 2. Make sure the wind vane spin freely.

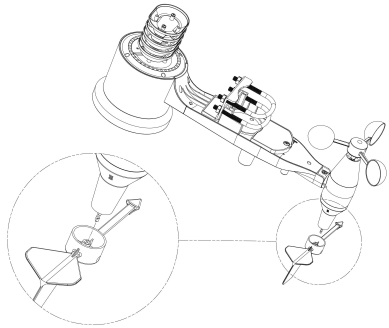

Figure1

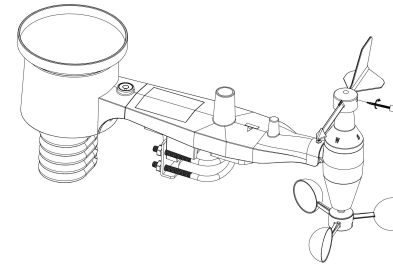

Figure 2

There are four alphabet letter of "N", "E", "S" and "W" around the wind direction, representing for the direction of North, East, South and West. Wind direction sensor has to be adjusted so that the directions on the sensor are matching with your real location. Permanent wind direction error will be introduced when the wind direction sensor is not positioned correctly during installation.

Install wind speed

Push the wind cup into the shaft. as shown in figure 3.
Tighten the set screw with as shown in figure 4. Make sure the wind speed spin freely.

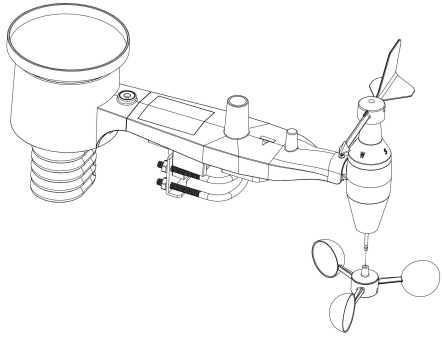

Figure 3

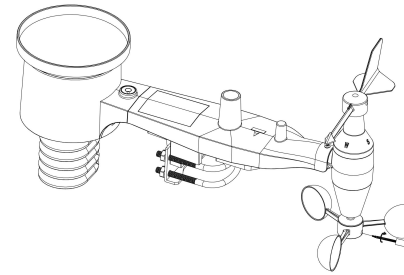

Figure 4

Install Batteries

Insert 2XAA batteries in the battery compartment. The LED indicator on the back of the transmitter will turn on for four seconds and normally flash once every 16 seconds (the sensor transmission update period).

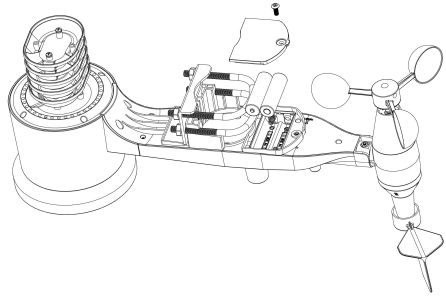

Figure 5

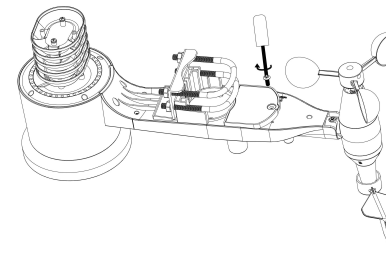

Figure 6

Note: If no LED light up or is lighted permanently, make sure the battery is inserted the correct way or a proper reset is happened. Do not install the batteries backwards. You can permanently damage the outdoor sensor

Note: We recommend lithium batteries for cold weather climates, but alkaline batteries are sufficient for most climates. We do not recommend rechargeable batteries. They have lower voltages, do not operate well at wide temperature ranges, and do not last as long, resulting in poorer reception.

.

Mount outdoor sensor

Reference 8&9. The mounting assembly includes two U-Bolts and a bracket that tightens around a 1 to 2” diameter pole (not included) using the four U-Bolt nuts.

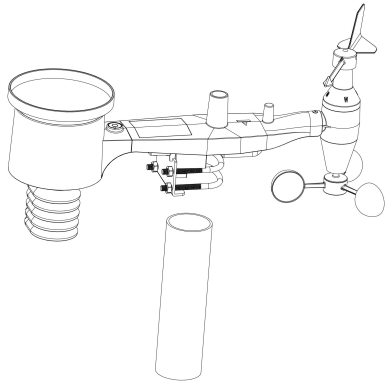

Figure 7

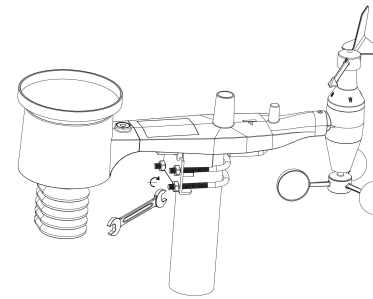

Figure 8

Use the bubble level beside the rain sensor as a guide to verify that sensors are level.

Indoor Sensor

Sensor Set up

Note: To avoid permanent damage, please take note of the battery polarity before inserting the batteries.

Remove the battery door on the back of the sensor. Insert two AA batteries.

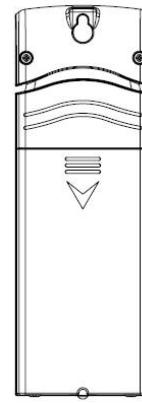

Figure 9

We recommend lithium batteries for cold weather climates, but alkaline batteries are sufficient for most climates. We do not recommend rechargeable batteries. They have lower voltages, do not operate well at wide temperature ranges, and do not last as long, resulting in poorer reception.

Replace the battery door. Note that the temperature and humidity will be displayed on the LCD display. Looking at the back of the unit from left to right, the polarity is (-) (+) for the top battery and (+) (-) for the bottom battery.

Sensor Placement

Direct sunlight and radiant heat sources will result in inaccurate temperature readings. Although the sensor is weatherproof, it is best to mount in a well-protected area, such as an eve.

1. Use a screw or nail to affix the remote sensor to the wall, as shown in Figure 10
2. Hang the remote sensor up on string, as shown in Figure 11.

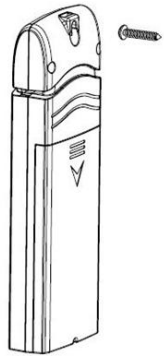

Figure 10

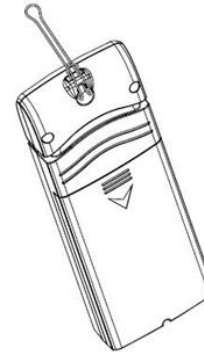

Figure 11

Note: Make sure the sensor is mounted vertically and not lying down on a flat surface. This will insure optimum reception. Wireless signals are impacted by distance, interference (other weather stations, wireless phones, wireless routers, TVs and computer monitors), and transmission barriers, such as walls. In general, wireless signals will not penetrate solid metal and earth (down a hill, for example).

Initial Receiver Unit Set Up

1. Before power on the device, please open the case (Figure 12) and use a 3G SIM card to install in one of the SIM card slots. (Figure 13).The Bigger slot is for micro SIM card and the other is for Nano SIM card.

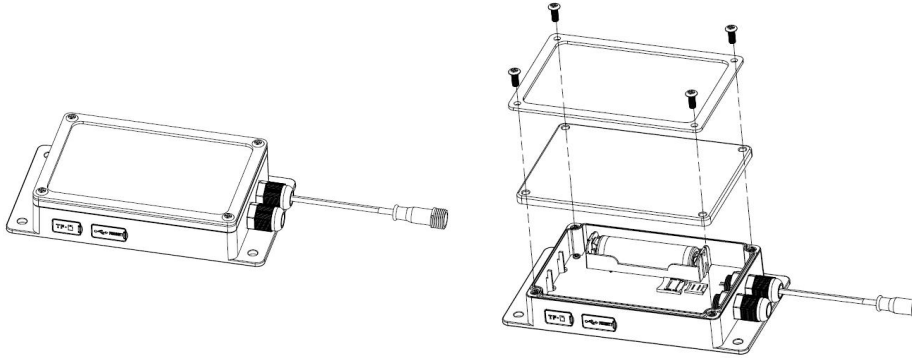

Figure 12

Micro SIM card slot: 1.Unfold the foil of Micro sim card slot 2.Put the SIM card into the compartment. 3. Cover the foil and lock the slot.

Nano SIM card slot: Insert the sim card into slot directly as shown in Figure 13.

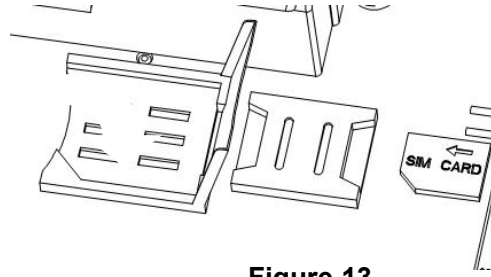

Figure 13

Note: The SIM card must support SMS and mobile data. SIM card lock must be disabled. Prepaid SIM cards are not recommended, as data will not be uploaded when you run out of credit.

Note: Please install only 1 SIM card to work.

2. Open the rubber seal on Micro SD card slot and install a Micro SD card. (Figure 14)

3. Install the supplied li-ion battery into the battery chamber. Do not install the batteries incorrect to the polarity markings. You can permanently damage the receiver. Until now the receiver is able to charge, work and supply power to outdoor unit (Figure 14)

The battery must be full charged before you set up the receiver unit. To charge the battery, Open the rubber seal on USB interface and connect the receiver to PC or an USB charger via USB cable. Charge the battery for at least 1 hour.

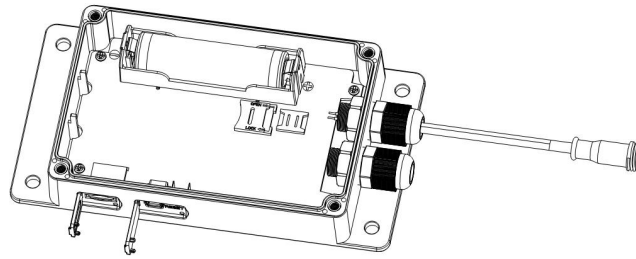

Figure 14

4. Use the 5 meter extending cable(included) to connect between the solar panel and the power connector of receiver unit.

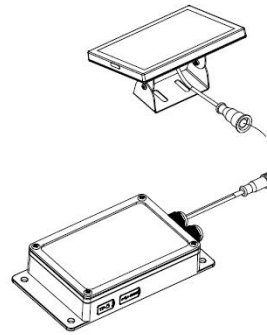

Figure 15

5. All LED lights will be light up after power on:

- WCDMA/GSM network indicator: Once the device is establishing the connection to internet, it will turn on and flash .The flash indicating data is uploading to website in a certain interval.(Set up on PC software).

Receiver switches between WCDMA and GSM automatically based on network availability.

Quick flash in every 2 seconds means failure deliver. Please check the network availability or the battery.

- RF Data collecting indicator: It will flash when receive data from outdoor sensor or indoor sensor.

  Quick flash in every 2 seconds means failure communication between indoor/outdoor sensor and receiver unit. Please check weather station and re-establish the RF communication.

- Power indicator: It flashes every 3 seconds during working.

  Stop flashing means power failure. Please check battery.

6. Time and date will be synchronized with internet after start up.
7. Open the rubber seal on there is a RESET button beside the USB interface. Use a pen to click it can reset the receiver unit.

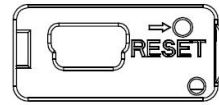

USB Configure Tool Operation

Before using the weather station, you need to configure the settings on the PC via" **WEATHER LOGGER".**
Receiver unit doesn't have to be powered on during configuring, unless you need to check current weather data and MIN/MAX records.

1. Decompress the Weather Logger file from CD, open the Weather Logger Setup.exe to install the software.

2. Connect the receiver device to PC via an USB wire, and launch the software.

When base unit is connected to PC, it shows “USB Connected” at the bottom of screen. If no base station is connected, it shows "USB Unconnected".

All weather data will be displayed in table, if receiver grabs data from indoor sensor and outdoor sensor.

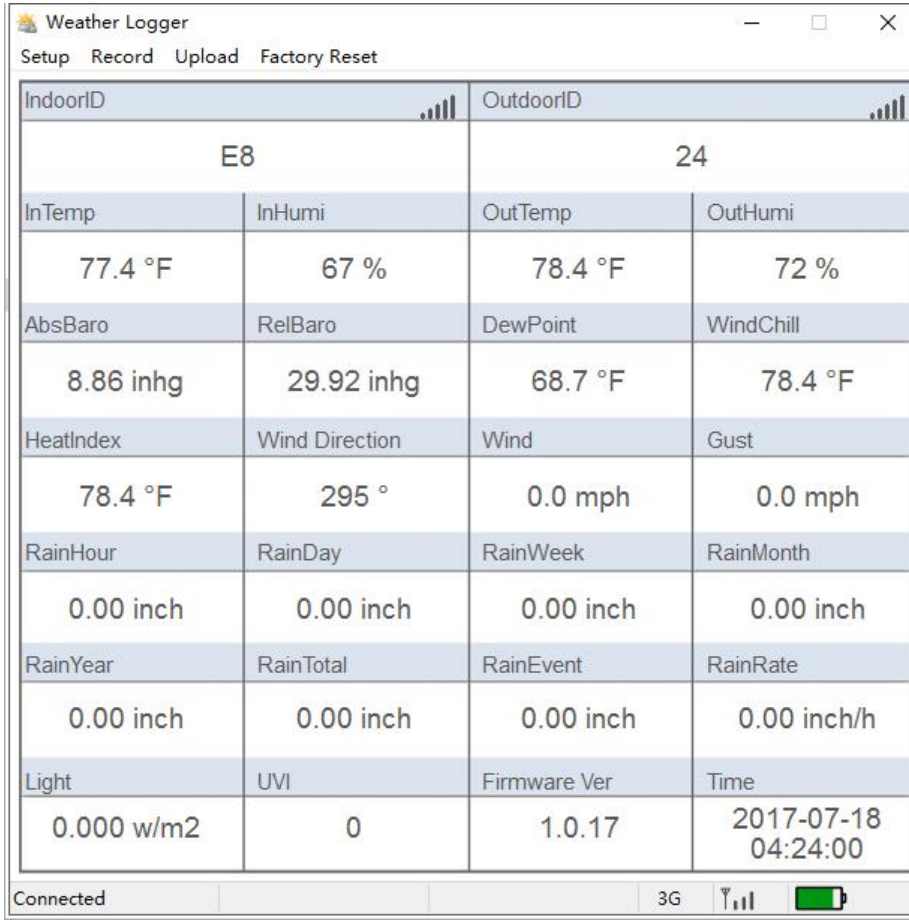

1. Setup Menu.

Click **Setup** menu, there are **Basic settings, Alarm, Calibration, Rain, Mobile Network** options.

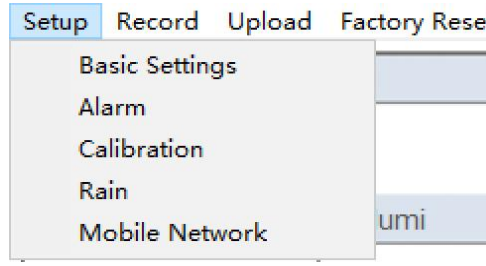

1.1 Basic Settings

Click **Basic Settings** option to enter setting menu. Units of weather parameters, time zone, DST on/off, data logging interval can be configured here. Once you made your choice, press Save to make the setting effective.

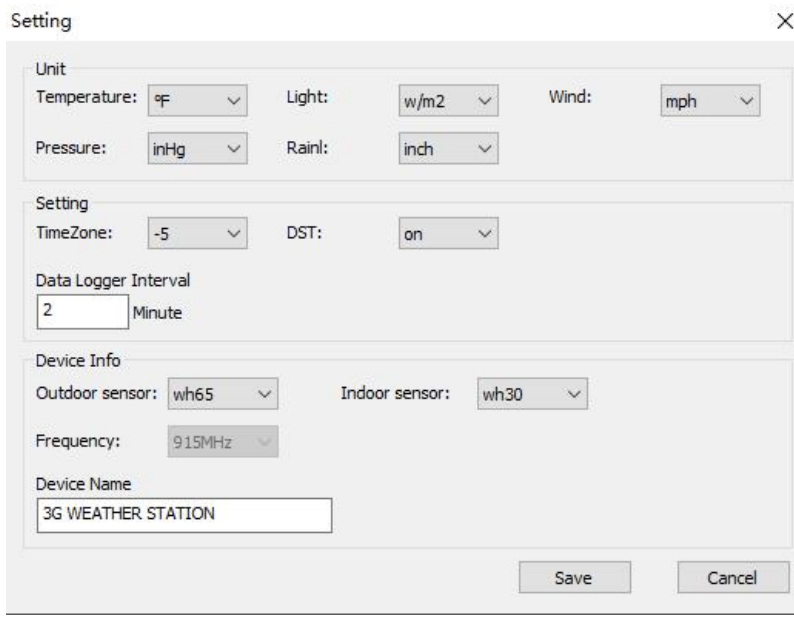

Note: Do not configure the units from time to time. Every time some unit is changed, a new log file would be generated in the micro SD card.

1.2 Alarm

Click **Alarm** option to enter setting menu. This section is used to set the desired time, high or low alarm value for the base unit, as well as able or disable the corresponding alarm function. Once you made your choice, choose Save to make the setting effective. If you don't want to make any change, just press Cancel and exit without change.

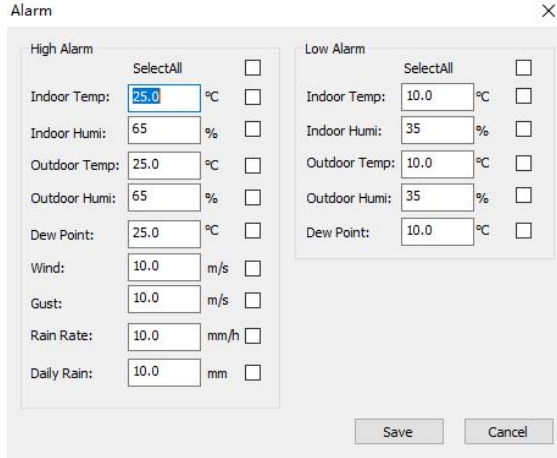

1.3 Calibration

Click **Calibration** option to enter setting menu.
If the data measured by device is found not in complete accord with official data, a reference coefficient can be configured here to make it as accurate as possible.

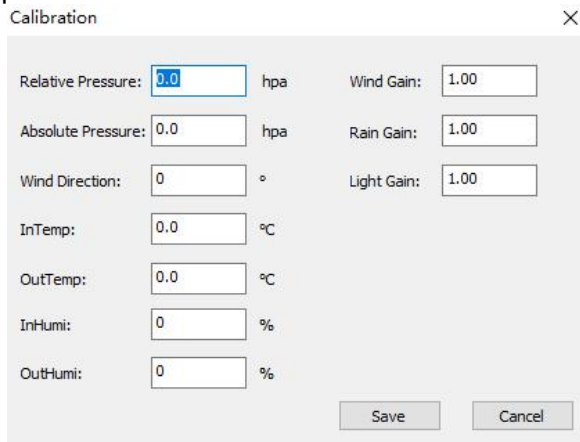

Parameter	Type of Calibration	Default	Typical Calibration Source
REL Barometer	Offset	Current Value	Local airport (3)
ABS Barometer	Offset	Current Value	Calibrated laboratory grade barometer
Wind Direction	Offset	Current Value	GPS, Compass (4)
Temperature	Offset	Current Value	Red Spirit or Mercury Thermometer (1)
Humidity	Offset	Current Value	Sling Psychrometer (2)
Wind	Gain	1.00	Calibrated laboratory grade wind meter (6)
Rain	Gain	1.00	Sight glass rain gauge with an aperture of at least 4” (7)
Solar Radiation	Gain	1.00	Calibrated laboratory grade solar radiation sensor

(1) The receiver displays two different pressures: absolute (measured) and relative (corrected to sea-level).

To compare pressure conditions from one location to another, meteorologists correct pressure to sea-level conditions. Because the air pressure decreases as you rise in altitude, the sea-level corrected pressure (the pressure your location would be at if located at sea-level) is generally higher than your measured pressure.

Thus, your absolute pressure may read 28.62 inHg (969 mb) at an altitude of 1000 feet (305 m), but the relative pressure is 30.00 inHg (1016 mb).

The standard sea-level pressure is 29.92 in Hg (1013 mb). This is the average sea-level pressure around the world. Relative pressure measurements greater than 29.92 inHg (1013 mb) are considered high pressure and relative pressure measurements less than 29.92 inHg are considered low pressure.

To determine the relative pressure for your location, locate an official reporting station near you (the internet is the best source for real time barometer conditions, such as Weather.com or Wunderground.com®), and set your weather station to match the

official reporting station.

(2) Only use this if you improperly installed the weather station sensor array, and did not point the direction reference to true north.

(3) Temperature errors can occur when a sensor is placed too close to a heat source (such as a building structure, the ground or trees).

To calibrate temperature, we recommend a mercury or red spirit (fluid) thermometer. Bi-metal (dial) and digital thermometers (from other weather stations) are not a good source and have their own margin of error. Using a local weather station in your area is also a poor source due to changes in location, timing (airport weather stations are only updated once per hour) and possible calibration errors (many official weather stations are not properly installed and calibrated).

Place the sensor in a shaded, controlled environment next to the fluid thermometer, and allow the sensor to stabilize for 48 hours. Compare this temperature to the fluid thermometer and adjust the ObserverIP receiver to match the fluid thermometer.

(4) Humidity is a difficult parameter to measure electronically and drifts over time due to contamination. In addition, location has an adverse affect on humidity readings (installation over dirt vs. lawn for example).

Official stations recalibrate or replace humidity sensors on a yearly basis. Due to manufacturing tolerances, the humidity is accurate to ± 5%. To improve this accuracy, the indoor and outdoor humidity can be calibrated using an accurate source, such as a sling psychrometer.

(5) Wind speed is the most sensitive to installation constraints. The rule of thumb for properly installing a wind speed sensor is 4 x the distance of the tallest obstruction. For example, if your house is 6m tall and you need mount the sensor on a 1.5m pole:

Distance = 4 x (6 – 1.5)m = 18m.

Many installations are not perfect and installing the weather station on a roof can be difficult. Thus, you can calibrate for this error with a wind speed multiplier.

In addition to the installation challenges, wind cup bearings (moving parts) wear over time.

Without a calibrated source, wind speed can be difficult to measure. We recommend using a calibrated wind meter (available from Ambient Weather) and a constant speed, high speed fan.

(6) The rain collector is calibrated at the factory based on the funnel diameter. The bucket tips every 0.03 of rain (referred to as resolution). The accumulated rainfall can be compared to a sight glass rain gauge with an aperture of at least 10mm..
Make sure you periodically clean the rain gauge funnel.

The default conversion factor based on the wavelength for bright sunlight is 126.7 lux / w/m^2 . This variable can be adjusted by photovoltaic experts based on the light wavelength of interest, but for most weather station owners, is accurate for typical applications, such as calculating evapotranspiration and solar panel efficiency.

1.4 Rain

Rain fall data initial value can be set up here. Setting up as “0” is to zero the rain fall data and restart counting.

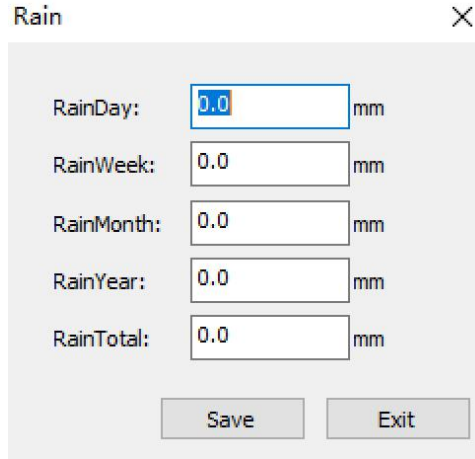

1.5 Mobile Network

Before you set up, please inquire SIM card carrier for APN, APN USER, APN PASSWORD information.

Note: If you change a SIM card belongs to a different carrier, APN information needs to be changed as well.

Telephone: You can set up at most 3 authorized numbers to send commands/receive alarm information.
And you need to define an ID No. for the device for identify. It can be consists of at most 20 digits or characters.

MSG Test: to send a message to test the WCDMA/GSM network.

SMS Alarm Interval: the interval of sending alarm indications by SMS to authorized smart phone, ranges from 10 minutes to 120 minutes. Set up as"0" means alarm indication will not repeat.

SMS send Current interval: the interval of sending real weather data to authorized smart phone, ranges from 1 minute to 24hours. Set up as"0" means real time weather data will not be sent.

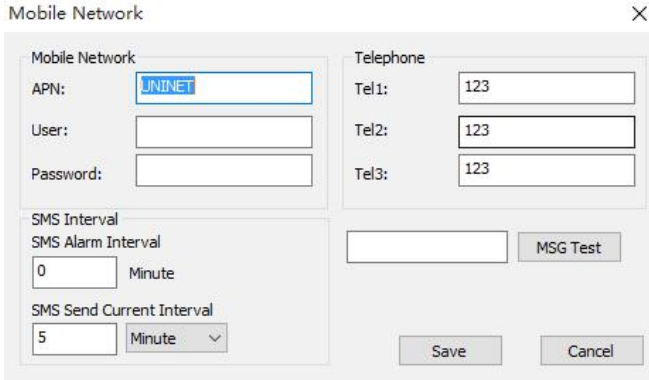

2. Record Menu

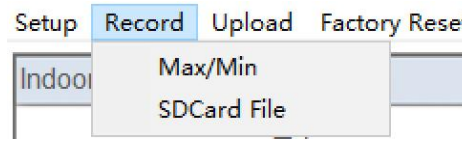

Click **Record** menu, there are **Max/Min** and **SDCard File** options.

2.1 Max/Min

This section is used to display the recorded min and max value.

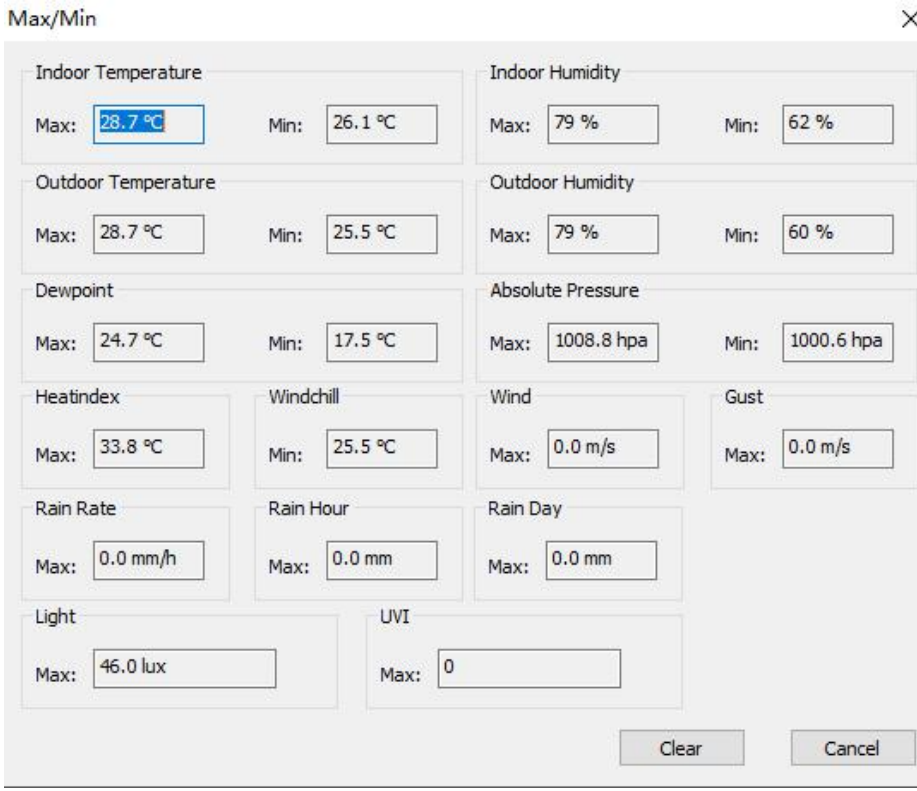

2.2 SDCard File

Click **SDCard File** to download and analyze data stored on the SD Card.

Select the file you wish to view from the list and press **Select** to view the data.

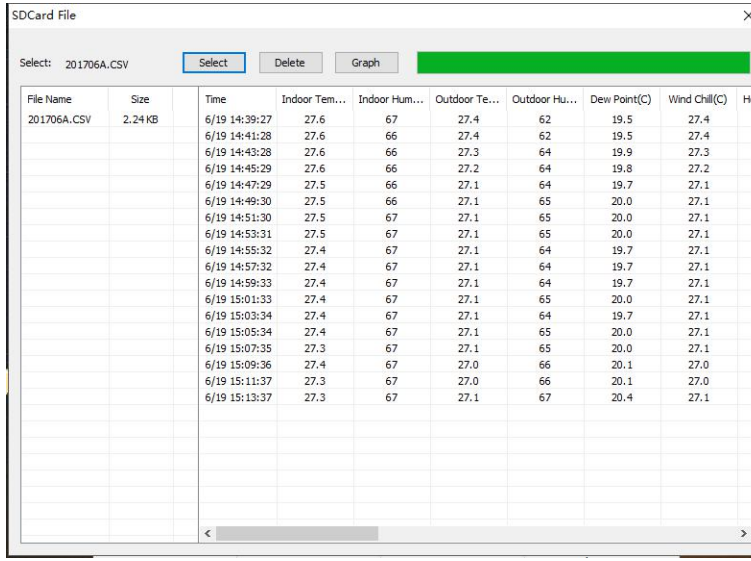

File Name	Size
201706A.CSV	2.24 KB

Time	Indoor Tem...	Indoor Hum...	Outdoor Te...	Outdoor Hu...	Dew Point(C)	Wind Chill(C)
6/19 14:39:27	27.6	67	27.4	62	19.5	27.4
6/19 14:41:28	27.6	66	27.4	62	19.5	27.4
6/19 14:43:28	27.6	66	27.3	64	19.9	27.3
6/19 14:45:29	27.6	66	27.2	64	19.8	27.2
6/19 14:47:29	27.5	66	27.1	64	19.7	27.1
6/19 14:49:30	27.5	66	27.1	65	20.0	27.1
6/19 14:51:30	27.5	67	27.1	65	20.0	27.1
6/19 14:53:31	27.5	67	27.1	65	20.0	27.1
6/19 14:55:32	27.4	67	27.1	64	19.7	27.1
6/19 14:57:32	27.4	67	27.1	64	19.7	27.1
6/19 14:59:33	27.4	67	27.1	64	19.7	27.1
6/19 15:01:33	27.4	67	27.1	65	20.0	27.1
6/19 15:03:34	27.4	67	27.1	64	19.7	27.1
6/19 15:05:34	27.4	67	27.1	65	20.0	27.1
6/19 15:07:35	27.3	67	27.1	65	20.0	27.1
6/19 15:09:36	27.4	67	27.0	66	20.1	27.0
6/19 15:11:37	27.3	67	27.0	66	20.1	27.0
6/19 15:13:37	27.3	67	27.1	67	20.4	27.1

To graph the data:

1. Identify the data file start and end date and times.
2. Press the **Graph** button.
3. Enter the start and end date and times in the appropriate fields identified in Step 1.
4. Select the parameter you wish to graph, and press the **Select** button.

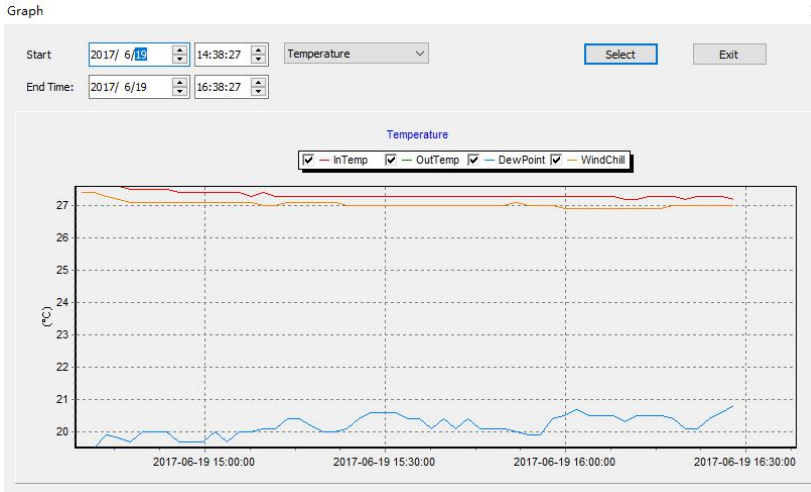

3. Upload

To upload weather data to the internet, from EasyWeather, select **Upload** from the menu bar.

User can upload data to website. www.wundergound.com or their own website. If user choose www.wundergound.com, he do not need to set the server, server type and port. If user choose custom, he need to set the server, server type and port. And web server update interval can be set up.

Note: Minimum uploading interval is 10 minutes using battery and solar panel in the package. If you use USB charger minimum uploading can be 3 minutes. It won't upload data to internet if you set up as"0".

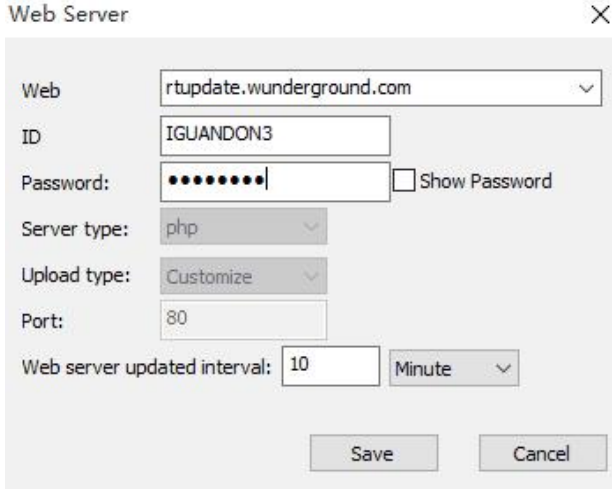

4. Update Firmware

After install the PC software and open on computer, if there is new version firmware available, a dialog box will pop up indicating to upgrade or not. Click "**OK**" will guide to upgrade the firmware.

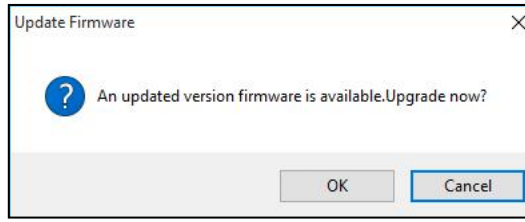

System will download firmware first. After that it upgrades the new firmware.

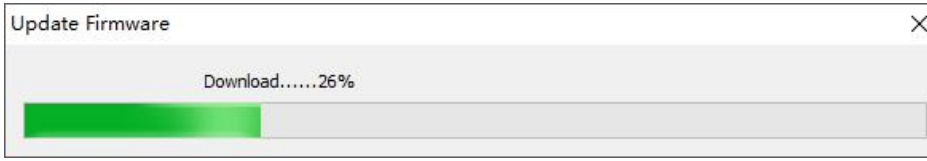

During upgrading:

5. Factory Reset

Press **Factory Reset** button, below indication will be displayed:

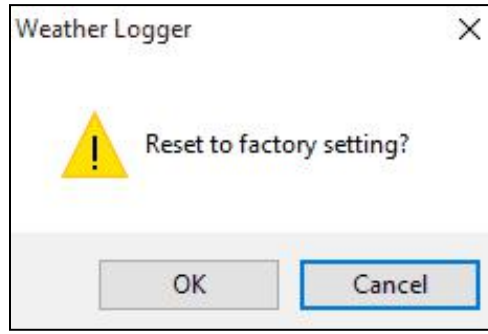

Click ”**OK**" to return to factory default settings or click ”cancel” to cancel the factory reset.

Mobile Phone Control via SMS

Users can check current weather data by sending SMS to the receiver terminal via any of the 3 pre-programed mobile numbers (only to be programed with PC software, please refer to USB configure tool Operation).

SMS command list:

1. **Current** : send current weather data
2. **MAX** : send Maximum value record
3. **MIN** : send Minimum value recorded
4. **Interval**: send interval value setting
5. **Status**: send system status, like battery voltage, sensor status, network condition
6. **Alarm ON:** turn on sending alarm SMS function
7. **Alarm Off:** turn off sending alarm SMS function.

1. View current weather Data: **Current**

Sending a SMS of “Current” to the station will trigger a command to the weather station to send its latest weather data to your mobile phone via SMS.

Answer from the weather station is as shown in below figure by 2 messages:

2. View Max/Min weather data record: **MAX::MIN**

Sending SMS of “**Max**” or “**Min**” to weather station triggers sending recorded maximum value to your mobile phone.

The SMS from station looks like this:

Max:
InTemp=28.0C
InHumi=68%
OutTemp=28.8C
OutHumi=73%
Dewpoint:23.5C
AbsBaro:1006.6hpa
HeatIndex:32.8C

Max:
Wind:0m/s
Gust:0m/s
RainRate:0mm/h
RainHour:0mm
RainDay:0mm
Light:0lux
UVI:0

Min:
InTemp=27.5C
InHumi=70%
OutTemp=26.1C
OutHumi=67%
AbsBaro:997.5hpa
Dewpoint:19.5C
WindChill:26.1C

3. Check programed interval time: **Interval**

Send SMS “Interval” to station triggers sending its pre-programed interval value stored on station, it is mainly for reminding the value programed on station. The reply of SMS from station is like this:

Alarm=10min
Send=12h
Save=2min
Updata=3min

Alarm: The interval of alarm repeating. A repeated alarm will only be send after this interval
Send: The interval of sending current weather data by SMS.
Save: The logging history data interval that to be saved on Mirco SD Card.
Updata: The interval of uploading data to internet.

4. Enable or disable alarm function: Alarm On :: **Alarm Off**

Send SMS “Alarm On” or “Alarm Off” will enable or disable the pre-programed alarm function. Station will reply “Alarm disable” or “Alarm Enable” to confirm.

Alarm enable

Alarm disable

5. Check weather station status: **Status**

Send SMS "**Status**" to station will trigger station to send back current condition of the station system. The SMS from station looks like this:

Status:
(In)Transmitter:normal
(Out)Transmitter:error
Network:normal
SDCard:normal
Battery:3.5V

(In)Transmitter=normal The weather station indoor sensor is functioning without errors

(In)Transmitter =error A error has occurred, check the indoor sensor

(Out) Transmitter=normal The weather station outdoor sensor is functioning without errors

(Out) Transmitter =error A error has occurred, check the outdoor sensor

Network=normal The weather station network is functioning without errors

Network= error A error has occurred, check the weather station SIM card.

SD card= normal The SD card is functioning without errors

SD card=not exist No Micro SD card is detected or available. Check the weather station and insert a suitable Micro SD card.

Battery=3.5V The voltage of battery in console is 3.5V

SMS data from station

Main base station will send weather, alarm or critical condition to system value regularly via SMS. Below are the SMS received looked like:

Current:
InTemp:28.9C
InHumi:92%
OutTemp:31.9C
OutHumi:77%
AbsBaro:8.86inHg
RelBaro:29.92inHg
DewPoint:27.4C
WindChill:31.9C
HeatIndex:42.7C
WindDir:267deg

Current:
Wind:2.5mph
Gust:3.4mph
Rain:
Rate:0inch/h
Day:0.73inch
Week:1.36inch
Month:1.36inch
Year:1.36inch
Light:390.37w/m2
UVI:3
Battery:3.8V

AlarmHigh:
InTemp:29.4C
RainRate:36.6mm
RainDay:6.1mm

AlarmLow:
OutTemp:22.5C
OutHumi:55%

● Low Power alarm

The receiver unit constantly monitors the battery voltage. Battery voltage is 4.2V when it is fully charged. An SMS alert will be sent to authorized smart phone when battery voltage drops below 3.3V:

Warning: Battery voltage low: 3.3V. Device will soon suspend internet uploading

We suggest the battery be charged or replaced once battery drops below 3.3V.
When battery voltage drops further and below 3.1v, 3G module will be suspended pushing data to weather server. SMS below will be sent to smart phone. After that No SMS will be sent or no data will be uploading to internet.

Warning: Battery voltage low: 3.1V. Internet uploading is suspended

All functions will be suspended when battery voltage drops below 2.9V. The last SMS you receive is like this:

> Battery levels sufficient.
> Restart RF and data Upload

After that system will enter hibernate mode and current consumption is reduced to its minimum. During the time if battery is charged and above 3.9v, then system will activate again by sending a restart SMS:

> Device startup

When battery voltage reached its critical low minimum, it should be considered for too long environment low solar radiation (solved by using a larger solar panel) or battery is not holding up enough energy and it should be replaced.

Weather Server

The receiver is configured to send real-time data to wunderground.com® Enter the Station ID and Password from wunderground.com®. The weather data will be displayed on the user interface.

Note: How to create a Wunderground.com account and station ID.

1. Visit Wunderground.com, click on the person icon and create a free account.
2. Select the Basic – Free account. A paid account is not required.

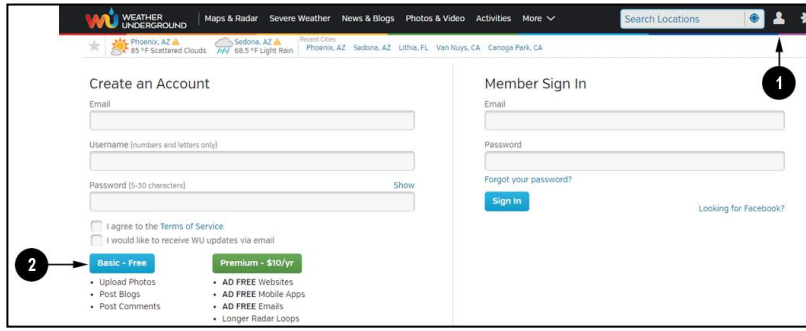

3. Select **More | Register Your PWS**.
4. Click **Send Validation Email**. Respond to the validation email from Wunderground (it may take a few minutes).

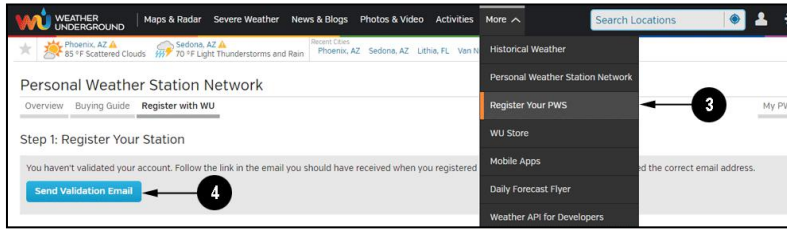

5. Select More | Register Your PWS again and enter all of the information requested.

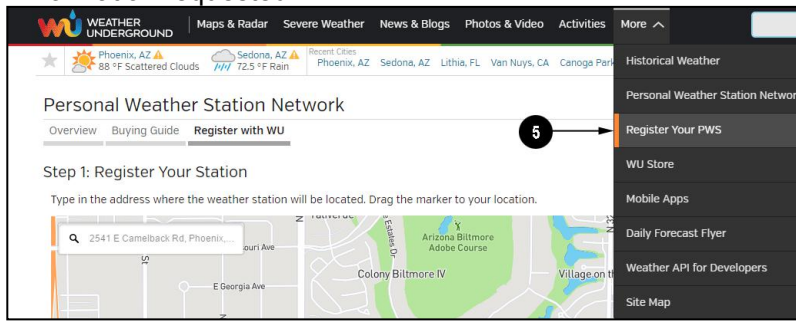

6. Once registered, you receive a station ID and password. Make a note of this. You will need to enter it into PC software。

Congratulations. Your station is now registered with Wunderground!

You are almost done. Now go to your weather station software and add the following:

Your Station ID:

KAZPHOEN424

Your Station Key/Password:

mdreeley

Maintenance

1. Clean the rain gauge once every 3 months. Rotate the funnel counter-clockwise and lift to expose the rain gauge mechanism, and clean with a damp cloth. Remove any dirt, debris and insects. If bug infestation is an issue, spray the array lightly with insecticide

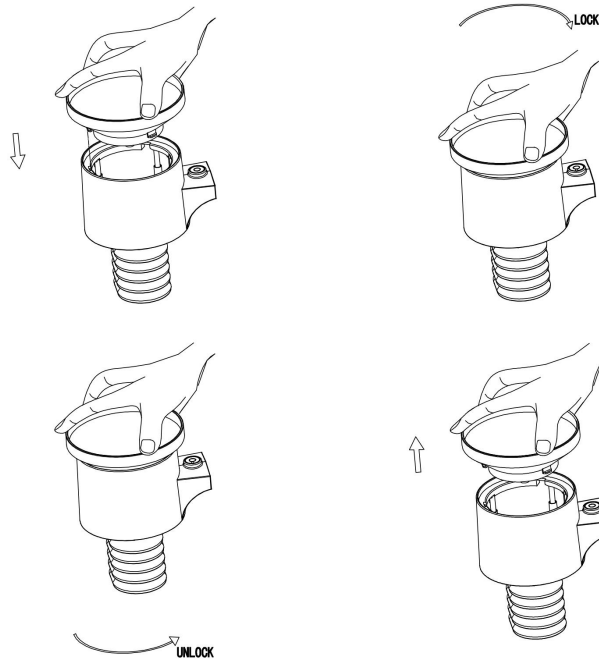

.

2. Clean the solar radiation sensor and solar panel every 3 months with damp cloth.
3. Replace batteries every 1-2 years. If left in too long, the batteries may leak due to environmental challenges. In harsh environments, inspect the batteries every 3 months (when cleaning the solar panel).
4. When replacing the batteries, apply a corrosion preventive compound on the battery terminals, available at Amazon and most hardware stores.
5. In snowy environments, spray the top of the weather station with anti-icing silicon spray to prevent snow build up.

Troubleshooting Guide

Problem	Solution
Outdoor data not transmitted.	The outdoor sensor array may have initiated properly and the data is registered by the console as invalid, and the console must be reset. Press the reset button as described in **Initial Receiver Unit Set Up** Take out the batteries and wait one minute, while covering the solar panel to drain the voltage. Put batteries back in and resync the console with the sensor array about 10 feet away. The LED next to the battery compartment will flash every 16 seconds. If the LED is not flashing every 16 seconds… Replace the batteries in the outside sensor array. If the batteries were recently replaced, check the polarity. If the sensor is flashing every 16 seconds, proceed to the next step. There may be a temporary loss of communication due to reception loss related to interference or other location factors, or the batteries may have been changed in the sensor array and the console has not been reset. The solution may be as simple as powering down and up the console (remove AC power and batteries, wait 10 seconds, and reinsert AC power and batteries).

Problem	Solution
Temperature sensor reads too high in the day time.	Make certain that the sensor array is not too close to heat generating sources or strictures, such as buildings, pavement, walls or air conditioning units. Use the calibration feature to offset installation issues related to radiant heat sources.
Relative pressure does not agree with official reporting station	You may be viewing the absolute pressure, not the relative pressure. Select the relative pressure. Make sure you properly calibrate the sensor to an official local weather station.
Rain gauge reports rain when it is not raining	An unstable mounting solution (sway in the mounting pole) may result in the tipping bucket incorrectly incrementing rainfall. Make sure you have a stable, level mounting solution.
Data not reporting to Wunderground.com	1. **Confirm your password or key is correct. It is the password you registered on Wunderground.com.** Your Wunderground.com password cannot begin with a non-alphanumeric character (a limitation of Wundeground.com, not the station). Example, $oewkrf is not a valid password, but oewkrf$ is valid. 2. **Confirm your station ID is correct.** The station ID is all caps, and the most common issue is substituting an O for a 0 (or visa versa). Example, KAZPHOEN11, not KAZPH0EN11 3. Make sure the date and time is correct on the console. If incorrect, you may be reporting old data, not real time data. 4. Check your router firewall settings. The console sends data via Port 80.

Specifications

Outdoor data
Transmission distance in open field: 100m(300 feet)
Frequency: 433MHz/868MHz(Europe)/915MHz(North America)
Temperature range: -40˚C--60˚C(-40℉ to +140℉)
Resolution: 0.1˚C (0.2℉)
Measuring range rel. humidity: 10%～99%
Rain volume display: 0 – 9999mm (show --- if outside range)
Resolution: 0.3mm (if rain volume < 1000mm)
1mm (if rain volume > 1000mm)
Wind speed: 0-160km/h (0~100mph) (show --- if outside range)
Light: 0-300000 lux
UV index: 0-15(0-2000 w/m2)
Measuring interval thermo-hygro sensor: 16 sec
Water proof level: IPX3

Indoor data
Measuring interval: 61 sec
Indoor temperature range: -40˚C--60˚C(-40℉ to +140℉)
Resolution: 0.1˚C (0.2℉)
Measuring range rel. humidity: 10%～99%
Resolution: 1%
Measuring range air pressure: 300-1100hPa (8.85-32.5inHg)
Accuracy: +/-3hpa under 700-1100hPa
Resolution: 0.1hPa (0.01inHg)

Power consumption
Base station: 1x 18650 battery (included) or USB charger (USB cable included)
Solar panel as backup power: Voc: 5.4V, Isc : 200Ma, Size:110*80mm

Indoor sensor: 2xAA Alkaline batteries (not included)
Outdoor sensor: 2xAA Alkaline batteries (not included)
Battery life: Minimum 12 months for base station
Minimum 12 months for indoor & outdoor sensor

Please help in the preservation of the environment and return used batteries to an authorized depot.

All rights reserved. This handbook must not be reproduced in any form, even in excerpts, or duplicated or processed using electronic, mechanical or chemical procedures without written permission of the publisher.

FCC Statement

Statement according to FCC part 15.19:
This device complies with part 15 of the FCC rules. Operation is subject to the following two
conditions:
1. This device may not cause harmful interference.
2. This device must accept any interference received, including interference that may cause
undesired operation.

Statement according to FCC part 15.21:
Any changes or Modifications not expressly approved by this company could void the user's authority to
operate the equipment.

Statement according to FCC part 15.105:
NOTE: This equipment has been tested and found to comply with the limits for a Class B digital
device, pursuant to Part 15 of the FCC Rules. These limits are designed to provide reasonable
protection against harmful interference in a residential installation. This equipment generates, uses and
can radiate radio frequency energy and, if not installed and used in accordance with the instructions,
may cause harmful interference to radio communications.

However, there is no guarantee that interference will not occur in a particular installation. If this
equipment does cause harmful interference to radio or television reception, which can be determined
by turning the equipment off and on, the user is encouraged to try to correct the interference by one or

more of the following measures:
• Reorient or relocate the receiving antenna.
• Increase the separation between the equipment and receiver.
• Connect the equipment into an outlet on a circuit different from that to which the receiver is connected.
• Consult the dealer or an experienced radio/TV technician for help.

Warranty Information

We disclaim any responsibility for any technical error or printing error, or their consequences.
All trademarks and patents are recognized.

We provide a 1-year limited warranty on this product against manufacturing defects in materials and workmanship.

This limited warranty begins on the original date of purchase, is valid only on products purchased and only to the original purchaser of this product. To receive warranty service, the purchaser must contact us for problem determination and service procedures.

This warranty covers only actual defects within the product itself, and does not cover the cost of installation or removal from a fixed installation, normal set-up or adjustments, claims based on misrepresentation by the seller or performance variations resulting from installation-related circumstances.