規格承認書
Specification for Approval

客　　戶：　TESTO
Customer
品　　名：　ANTENNA
Part name
料　　號：　ARY196-0361-015-00
Part No.

CHIEF	SALES	CHIEF	ENGINEER
ROX	ALAN	ROX	WAH
Date: 2024/05/14		Date: 2024/05/14	

驊 陞 科 技 股 份 有 限 公 司
WIESON TECHNOLOGIES CO., LTD.

(SR-83-16)

Customer Drawing

RoHS Compliant

REV	DATE	DESCRIPTION	ECN NO.	NAME
01	24.04.03	NEW RELEASE		LIEF

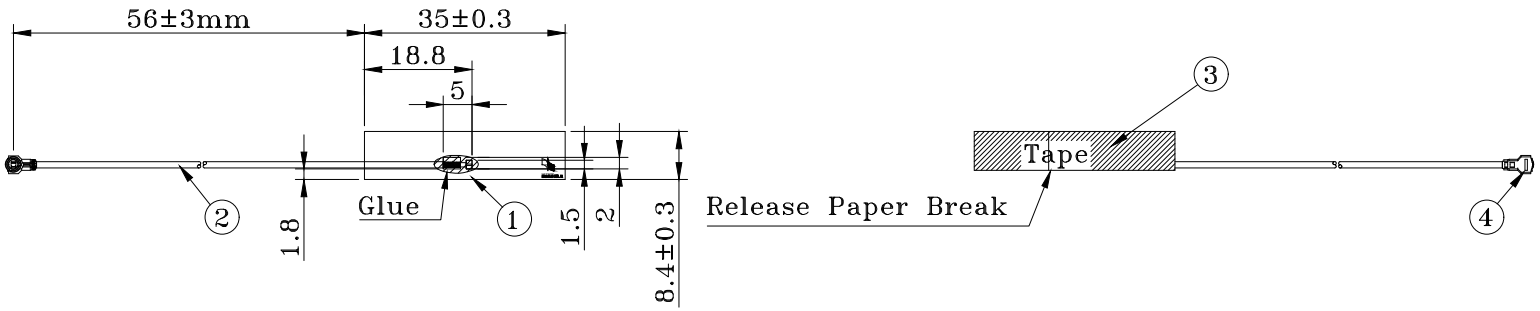

Note:
1.Frequency:2.4~2.5GHz
2.V.S.W.R.:≤2(With Case)
3.Efficiency:>40%
4.Impedance:50ohm

NO.	ITEM	DESCRIPTION	QTY
⑦			
⑥			
⑤			
④	MHF	I-PEX(IV) Connector For 0.81mm Cable , Gold Plated	1
③	Tape	3M9448HK Tape , Size:35 x 8.4mm	1
②	Cable	0.81mm Normal Coaxial Cable , FEP Black Jacket	1
①	FPC	FPC , FPC Size: 35 x 8.4mm	1

WIESON TECHNOLOGIES CO., LTD
WIESON

PART NO.: ARY196-0361-015-00

TITLE: ANTENNA

DRAWN BY	LIEF(WST)	DRAWING NO.	WSTSXXXXXX
CHECKED BY		DRAWING SIZE	A4
APPROVED BY		UNIT	mm
SORTING NO.	WSC	PAGE	1 OF 1

[ARTICLE: SR-83-41 V1]

WIESON TECHNOLOGIES CO.,LTD

BILL OF MATERIAL

Cust.	TESTO	TITLE	ANTENNA
Cust.P/N		WIESON P/N	ARY196-0361-015-00

NO.	DESCRIPTION	SUPPLIER	SUPPLIER PART NO.	UL NO.	AVL	QUANTITY	REMARK
1	FPC , FPC Size: 35 x 8.4mm	/	/	/	/	PCS	/
2	0.81mm Normal Coaxial Cable , FEP Black Jacket	/	/	/	/	MM	/
3	3M9448HK Tape , Size:35 x 8.4mm	/	/	/	/	PCS	/
4	I-PEX(IV) Connector For 0.81mm Cable , Gold Plated	/	/	/	/	PCS	/
5							
6							
7							
8							

APPROVED BY: ROX CHECKD BY: FOUNTAIN DESIGNED BY: WAH

WIESON TECHNOLOGIES CO., LTD.

WIESON 3D CHAMBER TEST REPORT

Customer:	**Testo**
Project Name:	**55X**
WIESON P/N:	**ARY196-0361-003-00**
Antenna Type:	**Internal**
Version No. :	**02**

Contact Information:
Tel:02-2647-1896

PM: **Paul Lin**
paul_lin @wieson.com
Ext.6636

Engineer: **George Hung**
george_hung@wieson.com
Ext.6687

15F., No.237, Sec.1, Datong Rd., Xizhi Dist., New Taipei City, Taiwan

WIESON

WIESON TECHNOLOGIES CO., LTD.

INDEX.

I. ELECTRONIC CHARACTERISTICS 3

II. Summary： 4

III. S-Parameter Measurement： 4

IV. Antenna Photos： 5

V. S-Parameter Measurement Result： 6

VI. The Test Information Anechoic Chamber 8

VII. Antenna Measurement Photo 12

VIII. Antenna Measurement Result 13

IX. 3D Radiation Pattern 14

Revision History

Revision	Date	Engineer	Description
01	2020/07/15	vicky	NEW RELEASE
02	2022/09/15	George Hung	Add Equipment List

No part of the information shown of this document may be used in any way without office stamp or written consent of WIESON TECHNOLOGIES CO., LTD.

I. ELECTRONIC CHARACTERISTICS

Item	Specification
Operating Frequency(GHz)	2.4-2.5
Bandwidth	100 MHz (Min.)
Return Loss	-10 dB (Max)
Polarization	Linear
Azimuth Bandwidth	Omni-directional
Peak Gain	2.5 dBi (Max)
Impedance	50Ω
Material	FPC
Maximum Power	1W
V.S.W.R	2 : 1
Radiation	Omni directional
Efficiency	> 40%
Cable type	OD:0.81
Operating Temperature	-10~60℃
Storage temp	-10~70℃

WIESON

Ⅱ. Summary：

This report to account for the measurement setup and result of the Antenna.
The measurement setup includes s-parameter, pattern, and gain measurement.
The measured data for Antenna are presented and analysis.

Ⅲ. S-Parameter Measurement：

A. Reflection coefficient：

(a) Instrument：Network Analyzer.

(b) Setup：

(1) Calibrate the Network Analyzer by one port calibration using O.S.L. calibration kits.
(2) Connect the antenna under test to the Network Analyzer.
(3) Measure the S11(reflection coefficient) shown in Fig. 1.
(4) Generally, the S11 is less than –10dB to ensure the 90% power into antenna and only less than 10% power back to system.

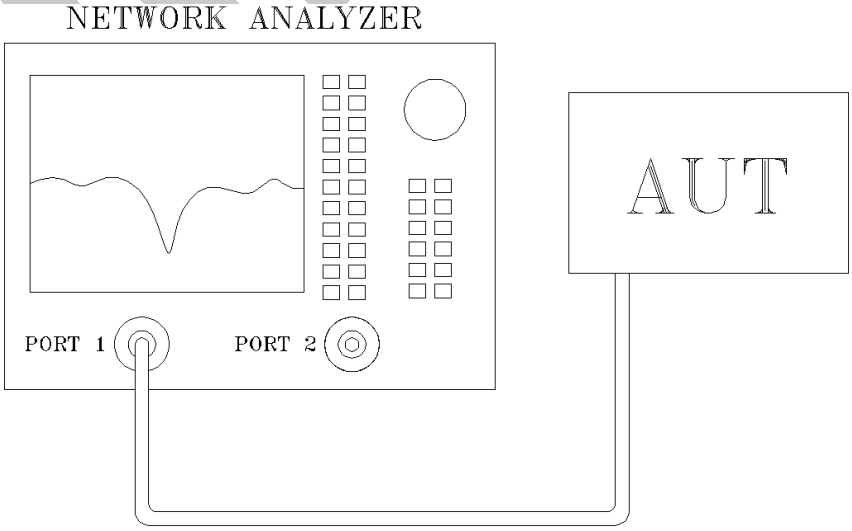

Fig.1 Antenna measured in Network Analyzer

WIESON

Ⅳ. Antenna Photos：

WIESON

V. S-Parameter Measurement Result：

Return Loss

Frequency (MHz)	2400	2450	2500
dB	-13.99	-23.84	-18.99

VSWR

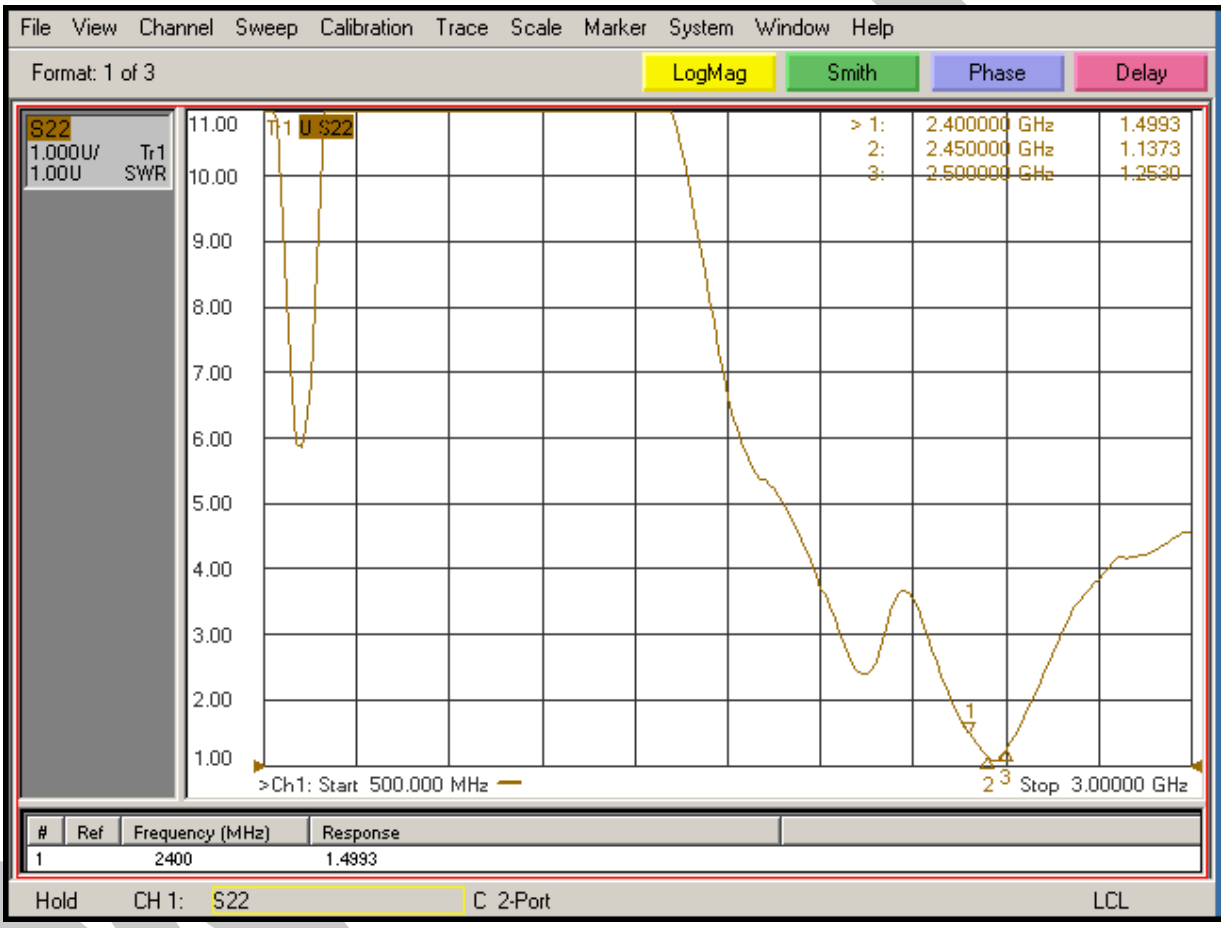

Frequency (MHz)	2400	2450	2500
VSWR	1.49	1.13	1.25

VI. The Test Information Anechoic Chamber

A. Scope

This statement of work defines the requirements of a far-field antenna measurement range, which includes
(1) One 560 cm (W) x 325 cm (H) x 620 cm (L) Antenna Measurement Anechoic Chamber, detailed requirements refer section B .
(2) One Far-field Antenna Measurement System with spinning linear CP measurement capabilities, detailed requirement refer section E & F .
(3) One broad-band transmitted antenna, detailed requirements refer section G .

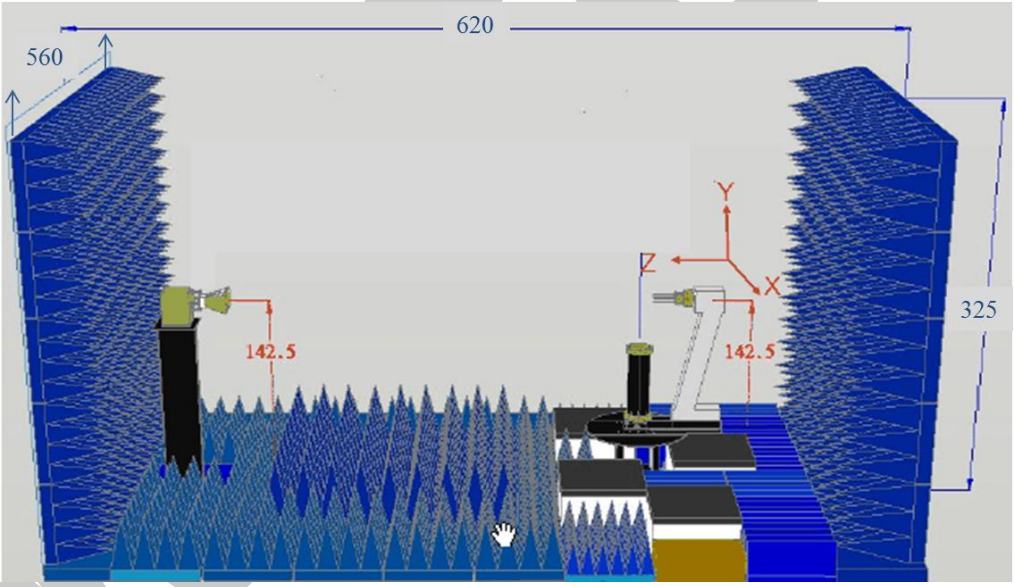

B. Antenna Measurement Anechoic Chamber

Fully anechoic chamber with dimension 560 cm in width, 325 cm in height and 620 cm in length. The quiet zone of this Chamber shall be greater than

60 cm @ 400MHz~900MHz, 43 cm @2.4 GHz, 31 cm @5.8 GHz,. Contractor should be aware of this anechoic chamber is going to be used for performing far-filed antenna measurement.

C. Electrical specifications
Frequency Range: 400 MHz to 6 GHz,
Quiet zone size: >60 cm @ 400MHz~900MHz, >43 cm @2.4 GHz, >31 cm @5.8 GHz.
Quiet zone ripple: < +/- 1.5 dB @500(400)MHz~800MHz, < +/-0.75 dB @800MHz~1.5GHz, < +/- 0.5 dB @1.5GHz~6.0GHz

Field Probing Frequency	Peak-to-Peak Amplitude Taper (Within specified Quiet Zone Area)	Quiet Zone Size (cm)	Compliant
0.9 GHz	< 0.75 dB	60	Yes
1.575 GHz	< 0.5 dB	43	Yes
1.8 GHz	< 0.5 dB	43	Yes
2.4 GHz	< 0.5 dB	43	Yes
5.8 GHz	< 0.5 dB	31	Yes

WIESON

D. Absorbers

We shall design and install proper absorbers on the inner walls of the chamber to guarantee the electrical specifications. However, the absorbers height shall be no less than 24" which enables the space in the chamber to be around 438 cm (W) x 203 cm (H) x 513 cm (L). All the absorber used shall meet NRL-8093 fire retardant regulations

E. Far-field Antenna Measurement System

We shall supply all the hardware and software which are capable of characterizing antenna radiation patterns from 30 KHz to 6 GHz using the existed Agilent 5230A PNA-L or Agilent 8753ES Vector Network Analyzer. The system shall be able to automatically measure and plot single axis amplitude and phase antenna patterns in either Cartesian or polar formats.

F. Far-field measurement software

The software consists of the control or data acquisition software and the data plotting software.

(1) The data acquisition software shall at least be capable of the following functions:
*measuring single frequency per cut - single axis (azimuth); system can automatically switch frequency at the end of a scan.
*measuring data in Uni-direction or bi-direction
*measuring data at least with azimuth 360 degrees. (+/- 180 degrees or 0-360 degrees)
*real time plot in Cartesian or polar format
*screen shows real time angle position

WIESON

*system automatically calculates S/N ratio level based on measured signal fluctuation
*function to set positioner zero position
*operator can set data taking velocity and data sampling interval
*entry to allow positioner offset to any angle

(2) The data plotting software shall at least be capable of the following functions:
*Editing plot data
*plotting data in Cartesian, Polar or delimited ASCII output with header information
*plotting data in linear or dB scales
*normalizing data to peak (dB), standard gain reference (dBi), or no normalization
*overlaying data, (drag and drop capability is preferable)
*outputting data to any Windows supported printers

G. Broadband Transmitted antenna

We shall provide a linear-polarized broadband antenna with the specifications better than those listed hereafter in this article,
Frequency: 0.5-6 GHz, Gain: >12 dBi @10 GHz, VSWR:<2,0:1, Front to Back Ration > 20 dB

H. Equipment List

Device	Ttype/Model	Serial#	Manufacturer	Cal. Date	Cal. Due Date
Anechoic Chamber	FFC-600L	FFC-600L-285	wavepro	30-Apr-22	30-Apr-23
Network Anylyzer	N5230A	MY45000163	Agilent Technologies	11-May-21	11-May-23
Turntable	NSI-SC-5606-3DZ	011	NSI-MI	N/A	N/A
Measurement SW	NSI 2000	SOM-SM-2000-V4	NSI-MI	N/A	N/A
Dual Polarization Vivaldi Antenna 0.6~8GHz	-	-	WavePro Inc.	30-Oct-20	30-Oct-23
Computer Monitor	HS-CM145	0410006420	CCTVINDIA	30-Aug-20	30-Aug-23
Industrial PC	IPC-610BP		Advantech Co., Ltd	30-Aug-20	30-Aug-23
Standard Beam Controller (SBC)	NSI-RF-5918	070	NSI-MI	30-Oct-20	30-Oct-23
Antenna Range Controller (ARC	NSI-SC-5911-4	0335	NSI-MI	30-Oct-20	30-Oct-23
RF Cable 240in 22GHz	UFA210C-1-2400-300300	MFR 64639 207908-005	Carlisle Interconnect Tech.	30-Aug-20	30-Aug-23
RF Cable 240in 22GHz	UFA210C-1-2400-300300	MFR 64639 209026-013	Carlisle Interconnect Tech.	30-Aug-20	30-Aug-23
RF Cable 60cm 26.5GHz	EC-A5-60-1678	Z0066	E-INSTUMENT TECH LTD.	30-Aug-20	30-Aug-23

WIESON

Ⅶ. Antenna Measurement Photo

WIESON

VIII. Antenna Measurement Result

Freq(MHz)	Gain(dBi)	3D-avgGain(dBi)	Efficiency(%)
2400	2.28	-3.88	40.93
2410	2.21	-3.85	41.21
2420	2.18	-3.76	42.07
2430	2.28	-3.61	43.55
2440	2.43	-3.4	45.71
2450	2.5	-3.24	47.42
2460	2.24	-3.35	46.24
2470	2.24	-3.3	46.77
2480	1.96	-3.52	44.46
2490	1.71	-3.76	42.07
2500	1.59	-3.94	40.36

IX. 3D Radiation Pattern

2.4GHz

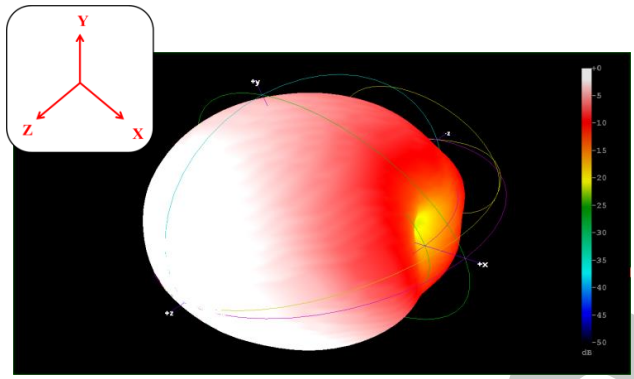

3D Pattern

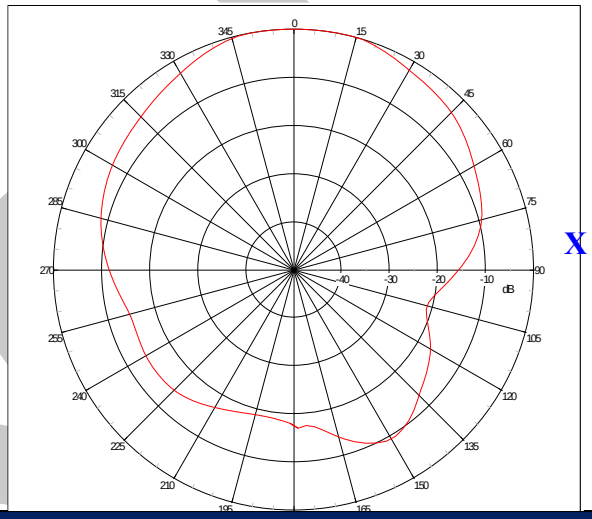

Far-field Pattern @Phi=0 deg. (E-Theta Plane-Cut)

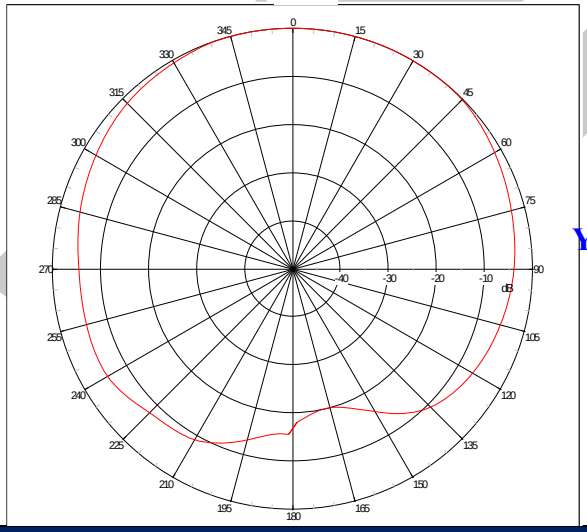

Far-field Pattern @Phi=90 deg. (E-Theta Plane-Cut)

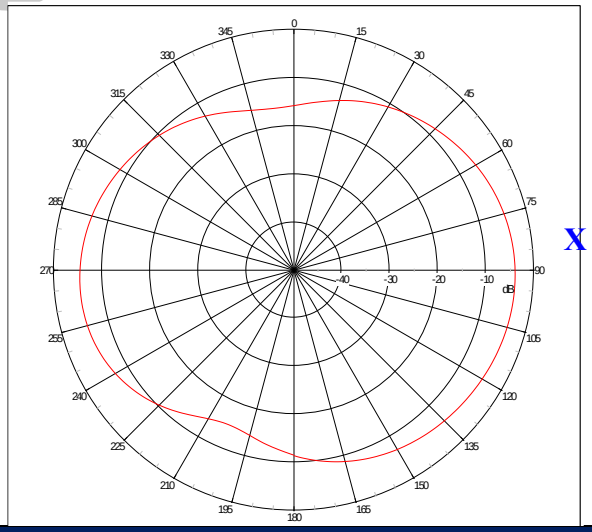

Far-field Pattern @Theta=90 deg. (E-Phi Plane-Cut)

2.45GHz

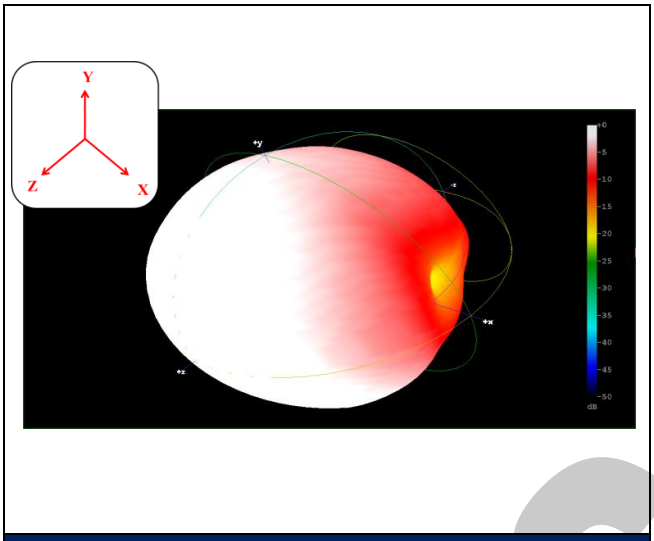

3D Pattern

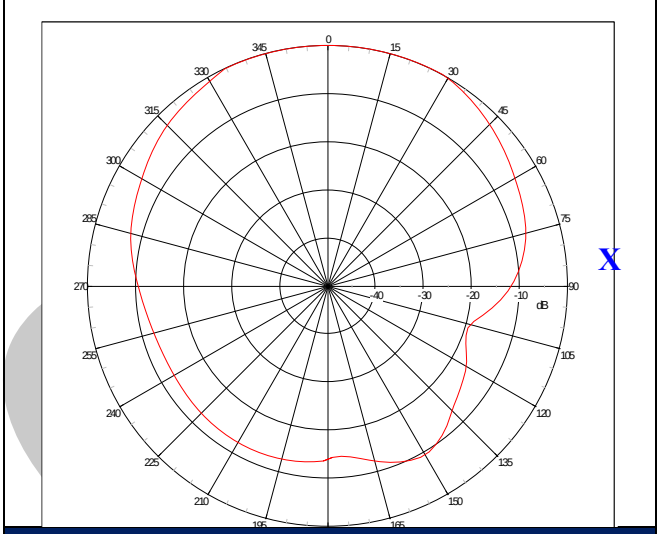

Far-field Pattern @Phi=0 deg. (E-Theta Plane-Cut)

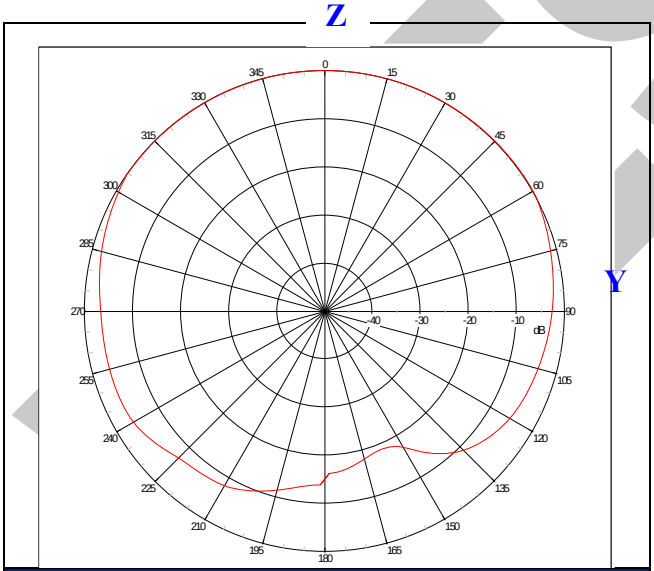

Far-field Pattern @Phi=90 deg. (E-Theta Plane-Cut)

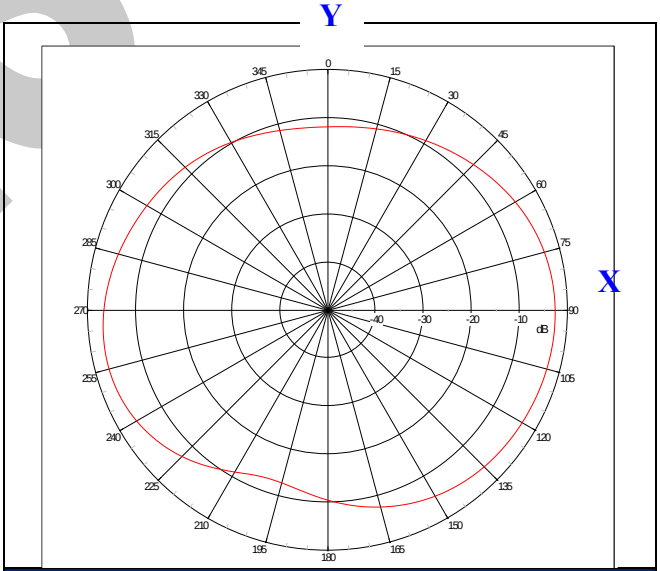

Far-field Pattern @Theta=90 deg. (E-Phi Plane-Cut)

2.5GHz

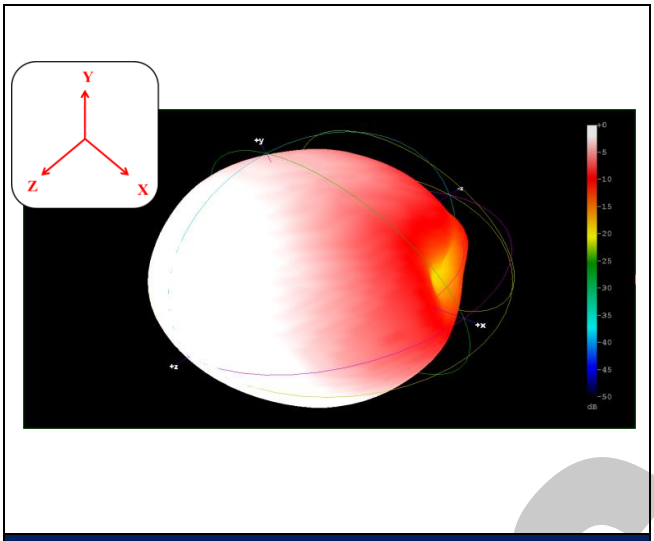

3D Pattern

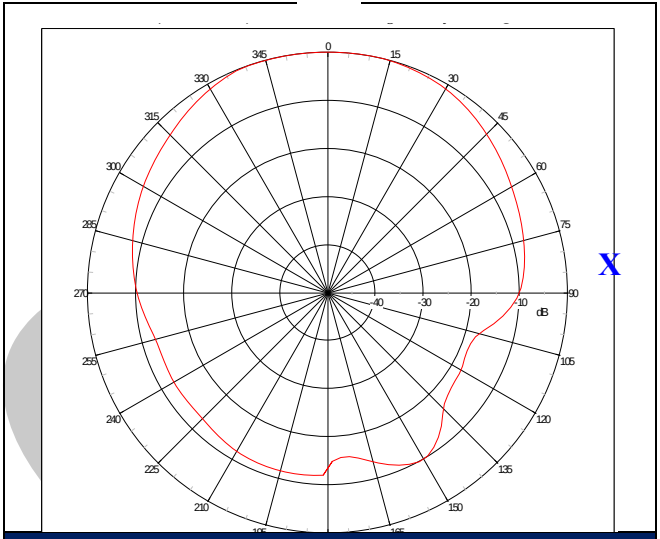

Far-field Pattern @Phi=0 deg. (E-Theta Plane-Cut)

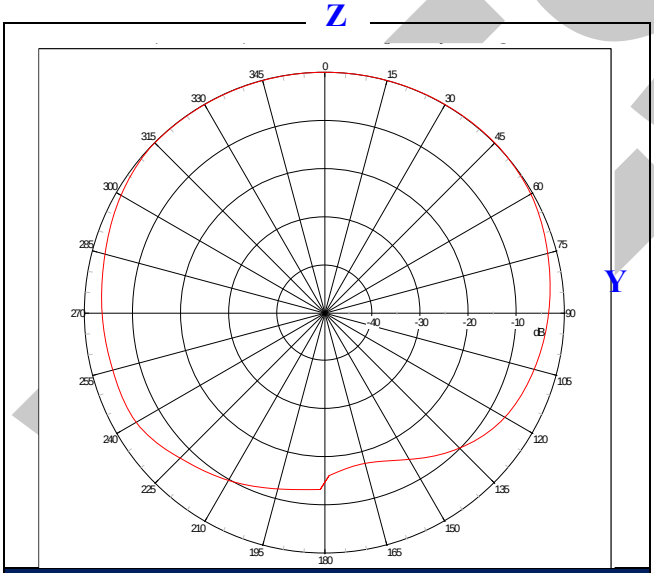

Far-field Pattern @Phi=90 deg. (E-Theta Plane-Cut)

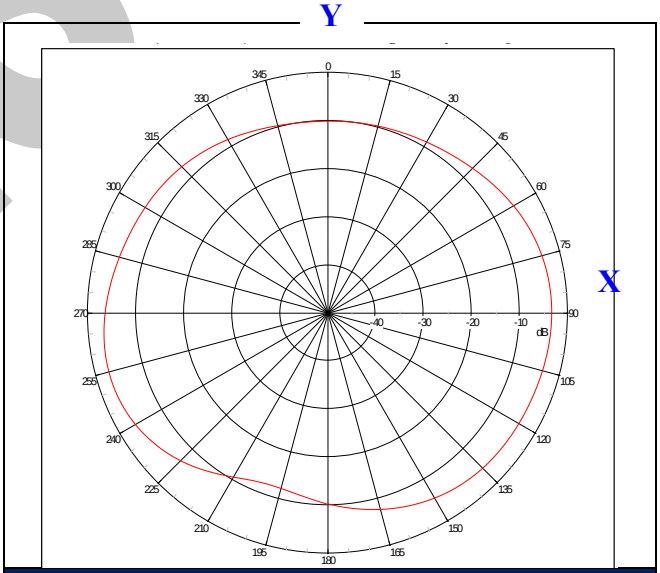

Far-field Pattern @Theta=90 deg. (E-Phi Plane-Cut)