FCC Measurement/Technical Report on

CON007
0460 2710

Contains:

FCC ID: WAF-04602710
IC: 6127B-04602710

Test Report Reference: MDE_TESTO_2501_FCC_01

Test Laboratory:
7layers GmbH
Borsigstrasse 11
40880 Ratingen
Germany

DAkkS
Deutsche
Akkreditierungsstelle
D-PL-12140-01-00

Note:
The following test results relate only to the devices specified in this document. This report shall not be reproduced in parts without the written approval of the test laboratory.

Table of Contents

1 Applied Standards and Test Summary 3
1.1 Applied Standards 3
1.2 FCC-IC Correlation Table 4
1.3 Measurement Summary 5
2 Revision History / Signatures 6
3 Administrative Data 7
3.1 Testing Laboratory 7
3.2 Project Data 7
3.3 Applicant Data 7
3.4 Manufacturer Data 7
4 Test object Data 8
4.1 General EUT Description 8
4.2 EUT Main components 8
4.3 Ancillary Equipment 9
4.4 Auxiliary Equipment 9
4.5 EUT Setups 9
4.6 Operating Modes / Test Channels 10
4.7 Duty Cycle 11
4.8 Product labelling 11
5 Test Results 12
5.1 Transmitter Spurious Emissions in Restricted Bands 12
5.2 Band Edge Compliance Restricted Bands 17
6 Test Equipment 23
6.1 Test Equipment Hardware 23
6.2 Test Equipment Software 25
7 Antenna Factors, Cable Loss and Sample Calculations 26
7.1 Antenna R&S HF907 (1 GHz – 18 GHz) 26
7.2 Antenna EMCO 3160-09 (18 GHz – 26.5 GHz) 27
8 Measurement Uncertainties 28
9 Photo Report 29

1 APPLIED STANDARDS AND TEST SUMMARY

1.1 APPLIED STANDARDS

Type of Authorization
Certification for an Intentional Radiator.

Applicable FCC Rules

Prepared in accordance with the requirements of FCC Rules and Regulations as listed in 47 CFR Ch.1 Parts 2 and 15 (10-1-24 Edition). The following subparts are applicable to the results in this test report.

Part 2, Subpart J - Equipment Authorization Procedures, Certification

Part 15, Subpart C – Intentional Radiators

§ 15.201 Equipment authorization requirement

§ 15.207 Conducted limits

§ 15.209 Radiated emission limits; general requirements

§ 15.247 Operation within the bands 902-928 MHz, 2400-2483.5 MHz

Note:
The tests were selected and performed with reference to the FCC Public Notice "Guidance for Compliance Measurements on Digital Transmission System, Frequency Hopping Spread Spectrum System, and Hybrid System Devices Operating under Section 15.247 of the FCC Rules, 558074 D01 15.247 Meas Guidance v05r02, 2019-04-02".

ANSI C63.10-2020 + Cor. 1-2023 + C63.10a-2024 + Errata to C63.10a-2024 is applied.

1.2 FCC-IC CORRELATION TABLE

Correlation of measurement requirements for DTS (e.g. WLAN 2.4 GHz, BT LE) equipment from FCC and IC

DTS equipment

Measurement	FCC reference	IC reference
Conducted emissions on AC Mains	§ 15.207	RSS-Gen Issue 5 & AMD 1 & AMD 2: 8.8
Occupied bandwidth	§ 15.247 (a) (2)	RSS-247 Issue 3: 5.2 (a)
Peak conducted output power	§ 15.247 (b) (3), (4)	RSS-247 Issue 3: 5.4 (d)
Transmitter spurious RF conducted emissions	§ 15.247 (d)	RSS-Gen Issue 5 & AMD 1 & AMD 2: 6.13 / 8.9/8.10; RSS-247 Issue 3: 5.5
Transmitter spurious radiated emissions	§ 15.247 (d); § 15.209 (a)	RSS-Gen Issue 5 & AMD 1 & AMD 2: 6.13 / 8.9/8.10; RSS-247 Issue 3: 5.5
Band edge compliance	§ 15.247 (d)	RSS-247 Issue 3: 5.5
Power density	§ 15.247 (e)	RSS-247 Issue 3: 5.2 (b)
Antenna requirement	§ 15.203 / 15.204	RSS-Gen Issue 5 & AMD 1 & AMD 2: 8.3
Receiver spurious emissions	–	–

1.3 MEASUREMENT SUMMARY

47 CFR CHAPTER I FCC PART 15 Subpart C §15.247	**§ 15.247 (d)**			
Transmitter Spurious Emissions in Restricted Bands The measurement was performed according to ANSI C63.10, chapter 6.4, 6.5, 6.6.5			**Final Result**	
OP-Mode Radio Technology, Operating Frequency, Measurement range	**Setup**	**Date**	**FCC**	**IC**
Bluetooth LE 2 Mbps, mid, 1 GHz - 26 GHz	S01_BC02	2026-06-22	Passed	Passed
WLAN b, mid, 1 GHz - 26 GHz	S01_BC02	2026-06-22	Passed	Passed

47 CFR CHAPTER I FCC PART 15 Subpart C §15.247	**§ 15.247 (d)**			
Band Edge Compliance Restricted Bands The measurement was performed according to ANSI C63.10, chapter 6.6.5			**Final Result**	
OP-Mode Radio Technology, Operating Frequency, Band Edge	**Setup**	**Date**	**FCC**	**IC**
Bluetooth LE 2 Mbps, high, high	S01_BC02	2026-06-22	Passed	Passed
WLAN ax 20 MHz (SU-ER), high, high	S01_BC02	2026-06-22	Passed	Passed
WLAN g, high, high	S01_BC02	2026-06-30	Passed	Passed

N/A: Not applicable
N/P: Not performed

2 REVISION HISTORY / SIGNATURES

Report version control			
Version	**Release date**	**Change Description**	**Version validity**
initial	2026-08-03	--	valid
--	--	--	--

COMMENT:

Not all tests were performed which are applicable. The equipment under test (EUT) includes according to applicant's information the following module:
- TI CC3351MOD from Texas Instruments Incorporated
Which is already certified according to 47 CFR CHAPTER I FCC PART 15.247.
The focus of this test report is to show evidence that the EUT with the integrated module fulfils the radiated spurious emissions requirements (KDB 996369). Therefore, only spot-checks have been performed.

(responsible for accreditation scope)
Dipl.-Ing. Daniel Gall

(responsible for testing and report)
BSc. Mhd Mouaz Saad

7 layers

7 layers GmbH, Borsigstr. 11
40880 Ratingen, Germany
Phone +49 (0)2102 749 0

3 ADMINISTRATIVE DATA

3.1 TESTING LABORATORY

Company Name:	7layers GmbH
Address:	Borsigstr. 11 40880 Ratingen Germany

The test facility is accredited by the following accreditation organisation:

Laboratory accreditation no:	DAkkS D-PL-12140-01-00
FCC Designation Number:	DE0015
FCC Test Firm Registration:	929146
ISED CAB Identifier	DE0007; ISED#: 3699A
Responsible for accreditation scope:	Dipl.-Ing. Daniel Gall
Report Template Version:	2025-10-17

3.2 PROJECT DATA

Responsible for testing and report:	BSc. Mhd Mouaz Saad
Employees who performed the tests:	documented internally at 7Layers
Date of Report:	2026-08-03
Testing Period:	2026-06-22 to 2026-06-30

3.3 APPLICANT DATA

Company Name:	Testo SE & Co. KGaA
Address:	Celsiusstr. 2 79822 Titisee-Neustadt Germany
Contact Person:	Christian Schwär

3.4 MANUFACTURER DATA

Company Name:	please see Applicant Data
Address:	
Contact Person:	

4 TEST OBJECT DATA

4.1 GENERAL EUT DESCRIPTION

Kind of Device product description	Bluetooth and WLAN communication module.
Product name	CON007
Type	0460 2710
Declared EUT data by the supplier	
Voltage Type	DC
Voltage Level	3.3 VDC (via AUX A)
Antenna / Gain	Internal / @(2400 - 2500 MHz): 3 dBi
Tested Modulation Type	**BTLE:** GFSK **WLAN:** WLAN b: DSSS, WLAN g/n: OFDM WLAN ax: OFDM and OFDMA
General product description	Bluetooth and WLAN communication module to be used/driven in a Linux environment.
EUT ports (connected cables during testing):	USB-C (via AUX A) (shielded, 2m)
Tested datarates	BTLE: 2Mbps WLAN b: 1 Mbps, WLAN g: 6 Mbps, WLAN ax: MCS0
Special software used for testing	simplelink_wifi_toolbox_win_2_5_5.exe
Connection to AC main is supported	No (no direct or indirect connection)

4.2 EUT MAIN COMPONENTS

Sample Name	**Sample Code**	**Description**
EUT B	DE1101040bc02	Radiated Sample
Sample Parameter	**Value**	
Serial No.	00665522936	
HW Version	0460 2710 01 Index 2	
SW Version	cc33xx_fw.bin; MD5 hash: 7f5a326fc38ab42bf0bb780c57836dee	
Comment	-	

NOTE:The short description is used to simplify the identification of the EUT in this test report.

4.3 ANCILLARY EQUIPMENT

For the purposes of this test report, ancillary equipment is defined as equipment which is used in conjunction with the EUT to provide operational and control features to the EUT. It is necessary to configure the system in a typical fashion, as a customer would normally use it. But nevertheless Ancillary Equipment can influence the test results.

Device	Details(Manufacturer, Type Model, HW, SW, S/N)	Description
-	-	-

4.4 AUXILIARY EQUIPMENT

For the purposes of this test report, auxiliary equipment is defined as equipment which is used temporarily to enable operational and control features especially used for the tests of the EUT which is not used during normal operation or equipment that is used during the tests in combination with the EUT but is not subject of this test report. It is necessary to configure the system in a typical fashion, as a customer would normally use it.
But nevertheless Auxiliary Equipment can influence the test results.

Device	Details(Manufacturer, Type Model, HW, SW, S/N)	Description
AUX A	Texas Instruments, LP-XDS11ET, -, -, 2424	TI-Launchpad
AUX B	Testo, -, -, -, -	Adapter Launchpad-M.2
AUX C	Fujitsu Ltd., Lifebook U758, -, -, DSAL009811	Laptop RE05

4.5 EUT SETUPS

This chapter describes the combination of EUTs and equipment used for testing. The rationale for selecting the EUTs, ancillary and auxiliary equipment and interconnecting cables, is to test a representative configuration meeting the requirements of the referenced standards.

Setup	Combination of EUTs	Description and Rationale
S01_BC02	EUT B, AUX A, AUX B, AUX C	Radiated Setup

4.6 OPERATING MODES / TEST CHANNELS

This chapter describes the operating modes of the EUTs used for testing.

4.6.1 TEST CHANNELS

WLAN	**2.4 GHz ISM 2400 - 2483.5 MHz**		
20 MHz Test Channels:	**low**	**mid**	**high**
Channel:	1	6	11
Frequency [MHz]	2412	2437	2462

	2.4 GHz ISM 2400 - 2483.5 MHz		
BT LE Test Channels:	**low**	**mid**	**high**
Channel:	1	19	38
Frequency [MHz]	2404	2440	2478

4.6.2 OPERATING MODES

The testing was conducted at the maximum output power setting specified by the manufacturer.

- BTLE mode: GFSK, Data Rate = 2 Mbps
- WLAN b-mode: 1 Mbit/s
- WLAN g-mode: 6 Mbit/s
- WLAN ax-mode (20 MHz BW):MSC0, support also the following mode:
    - ax- mode Single User Extended Range (SU-ER): RU106 / Offset 54 is worst case mode by ax20-mode

4.7 DUTY CYCLE

The test was performed according to:
ANSI C63.10, chapter 10.6

Bluetooth low energy 2 Mbps; Duty Cycle = 74.41 %	WLAN b mode 1 Mbps; Duty Cycle = 99.8 %
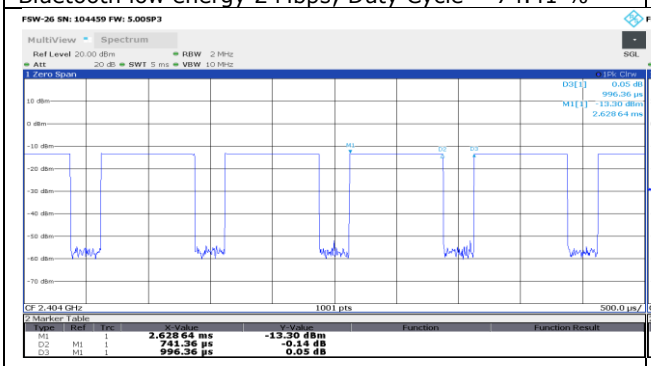	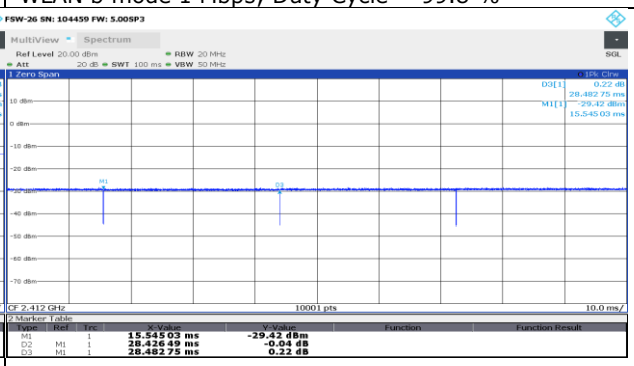
WLAN g mode 6 Mbps; Duty Cycle = 98.9 %	WLAN ax mode 20 MHz(SU-ER); Duty Cycle = 98.8 %
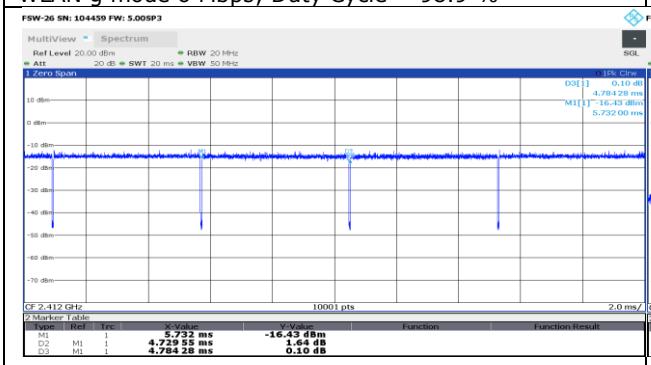	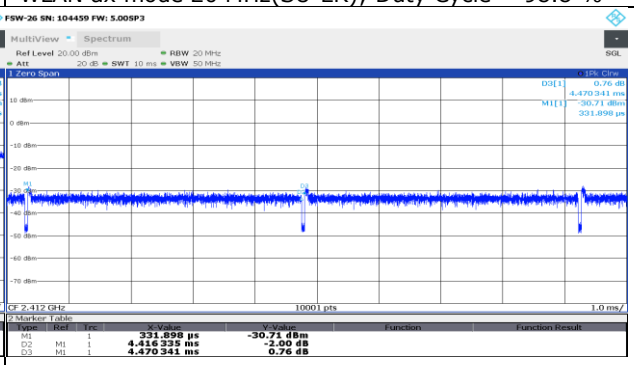

4.8 PRODUCT LABELLING

4.8.1 FCC ID LABEL

Please refer to the documentation of the applicant.

4.8.2 LOCATION OF THE LABEL ON THE EUT

Please refer to the documentation of the applicant.

5 TEST RESULTS

5.1 TRANSMITTER SPURIOUS EMISSIONS IN RESTRICTED BANDS

Standard **FCC Part 15 Subpart C**

The test was performed according to:
ANSI C63.10, chapter 6.4, 6.5, 6.6.5

5.1.1 TEST DESCRIPTION

The test set-up was made in accordance to the general provisions of ANSI C63.10 in a typical installation configuration. The measurements were performed according the following sub-chapters of ANSI C63.10:

- > 1 GHZ: Chapter 6.6 (procedure according 6.6.5 used)

The measurement procedure is implemented into the EMI test software EMC32 from R&S. Exploratory tests are performed at 3 orthogonal axes to determine the worst-case orientation of a body-worn or handheld EUT. The final test on all kind of EUTs is also performed at 3 axes. A pre-check is performed while the EUT is powered.

Above 1 GHz:

The Equipment Under Test (EUT) was set up on a non-conductive support (tilt device) at 1.5 m height in the fully-anechoic chamber.
All steps were performed with one height (1.5 m) of the receiving antenna only.

Measurement above 1 GHz

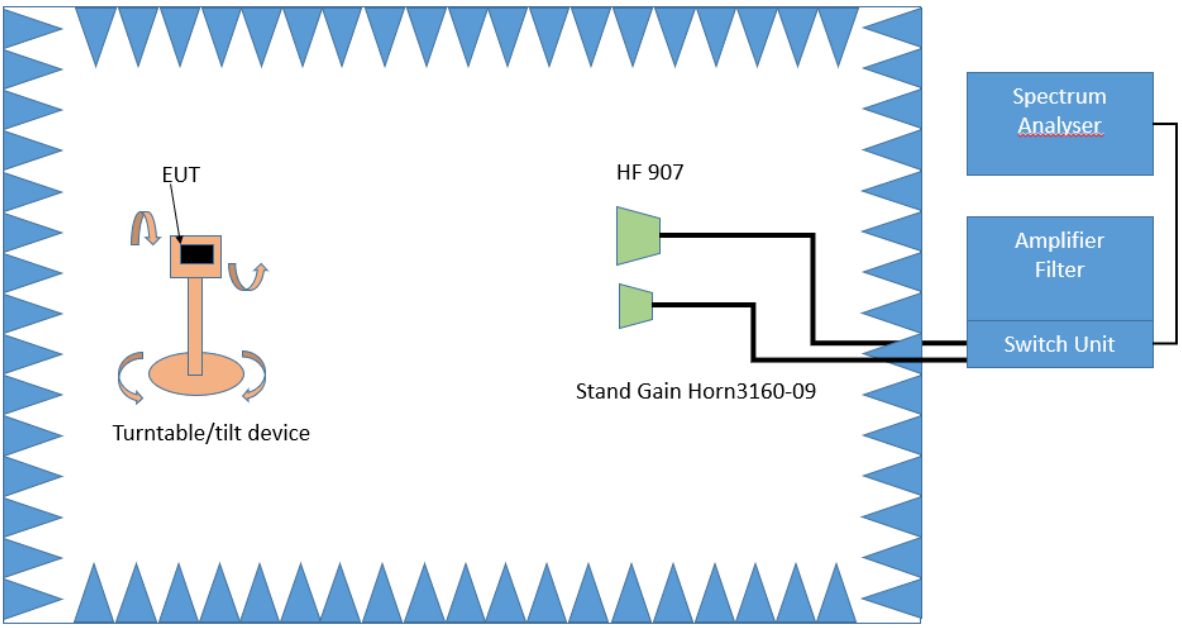

Test Setup; Spurious Emission Radiated (FAC), 1 GHz-26.5 GHz

Step 1:
The EUT is turned during the preliminary measurement across the elevation axis, with a step size of 90 °.
The turn table step size (azimuth angle) for the preliminary measurement is 45 °.
Spectrum analyser settings:
- Detector: Peak, Average
- RBW = 1 MHz
- VBW = 3 MHz

Step 2:
The turn table azimuth will slowly vary by ± 22.5°.
The elevation angle will slowly vary by ± 45°
Spectrum analyser settings:
- Detector: Peak

Step 3:
Spectrum analyser settings for step 3:
- Detector: Peak / CISPR Average
- Measured frequencies: in step 1 determined frequencies
- RBW = 1 MHz
- VBW = 3 MHz
- Measuring time: 1 s

5.1.2 TEST REQUIREMENTS / LIMITS

FCC Part 15, Subpart C, §15.247 (d)
... In addition, radiated emissions which fall in the restricted bands, as defined in Section 15.205(a), must also comply with the radiated emission limits specified in Section 15.209(a) (see Section 15.205(c)).

FCC Part 15, Subpart C, §15.209, Radiated Emission Limits

Frequency in MHz	Limit (µV/m)	Measurement distance (m)	Limits (dBµV/m)
0.009 – 0.49	2400/F(kHz)@300m	3	(48.5 – 13.8)@300m
0.49 – 1.705	24000/F(kHz)@30m	3	(33.8 – 23.0)@30m
1.705 – 30	30@30m	3	29.5@30m

The measured values are corrected with an inverse linear distance extrapolation factor (40 dB/decade) according FCC 15.31 (2).

Frequency in MHz	Limit (µV/m)	Measurement distance (m)	Limits (dBµV/m)
30 – 88	100@3m	3	40.0@3m
88 – 216	150@3m	3	43.5@3m
216 – 960	200@3m	3	46.0@3m
960 - 26000	500@3m	3	54.0@3m
26000 - 40000	500@3m	1	54.0@3m

The measured values above 26 GHz are corrected with an inverse linear distance extrapolation factor (20 dB/decade).

§15.35(b) ..., there is also a limit on the radio frequency emissions, as measured using instrumentation with a peak detector function, corresponding to 20 dB above the maximum permitted average limit....

Used conversion factor: Limit (dBµV/m) = 20 log (Limit (µV/m)/1µV/m)

5.1.3 TEST PROTOCOL

Ambient temperature: 30 °C
Air Pressure: 1018 hPa
Humidity: 49 %
BT LE 2 Mbit/s
Applied duty cycle correction (AV): 2.6 dB

Ch. No.	Ch. Center Freq. [MHz]	Spurious Freq. [MHz]	Spurious Level [dBµV/m]	Detec-tor	RBW [kHz]	Limit [dBµV/m]	Margin to Limit [dB]	Limit Type
19	2440.0	2364.4	40.3	AV	1000	54.0	13.7	RB
19	2440.0	2364.4	54.8	PEAK	1000	74.0	19.2	RB
19	2440.0	4880.1	41.5	AV	1000	54.0	12.5	RB
19	2440.0	4880.1	57.5	PEAK	1000	74.0	16.5	RB

Ambient temperature: 30 °C
Air Pressure: 1018 hPa
Humidity: 49 %
WLAN b-Mode; 20 MHz; 1 Mbit/s
Applied duty cycle correction (AV): 0 dB

Ch. No.	Ch. Center Freq. [MHz]	Spurious Freq. [MHz]	Spurious Level [dBµV/m]	Detec-tor	RBW [kHz]	Limit [dBµV/m]	Margin to Limit [dB]	Limit Type
6	2437.0	2483.5	40.3	AV	1000	54.0	13.7	RB
6	2437.0	2483.5	53.8	PEAK	1000	74.0	20.2	RB
6	2437.0	2661.4	38.0	AV	1000	54.0	16.0	RB
6	2437.0	2661.4	51.3	PEAK	1000	74.0	22.7	RB
6	2437.0	3999.3	32.9	AV	1000	54.0	21.1	RB
6	2437.0	3999.3	46.2	PEAK	1000	74.0	27.8	RB
6	2437.0	4666.2	34.7	AV	1000	54.0	19.3	RB
6	2437.0	4666.2	47.3	PEAK	1000	74.0	26.7	RB

Remark: Please see next sub-clause for the measurement plot.

5.1.4 MEASUREMENT PLOT (EXAMPLE PLOT, SHOWING WORST CASE, IF APPLICABLE)

Trace:
blue = Peak (1 - 40 GHz)
green = AV (9 kHz – 30 MHz and 1 - 26 GHz)

Marker:
Star = critical frequency, Rhombus = final Results

Radio Technology = Bluetooth LE 2 Mbps, Operating Frequency = mid,
Measurement range = 1 GHz - 26 GHz
(S01_BC02)

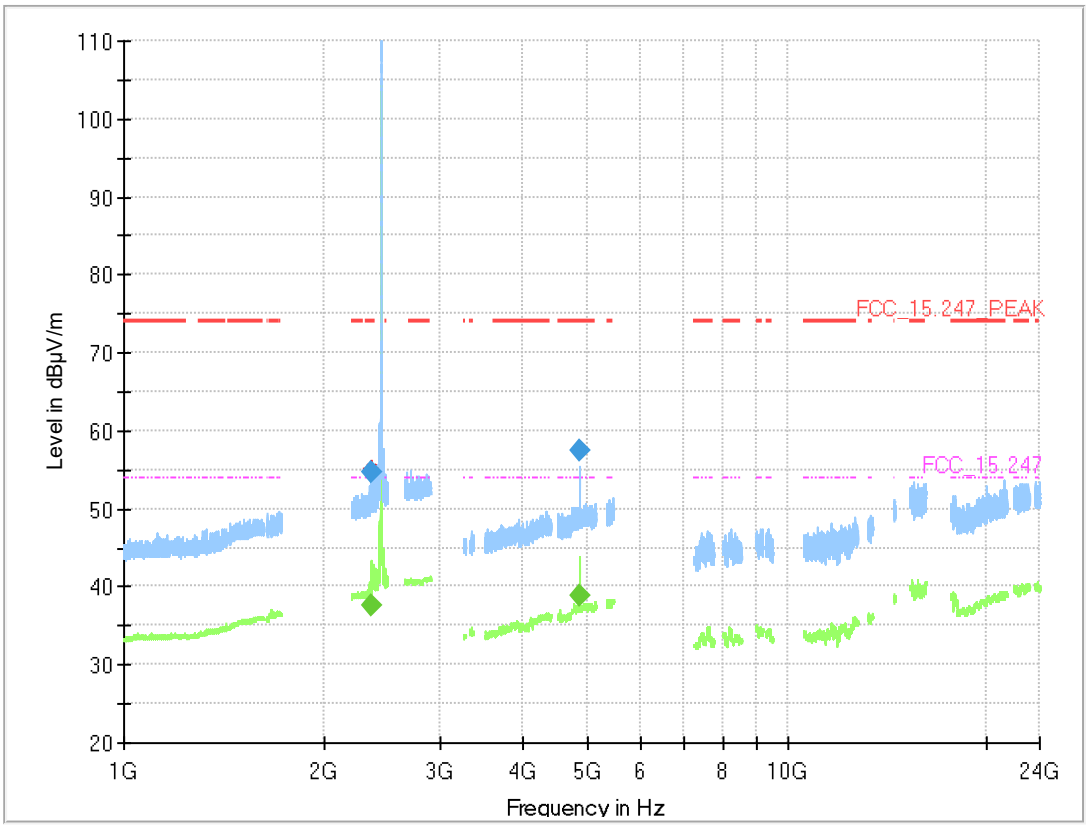

Final_Result

Frequency (MHz)	MaxPeak (dBµV/m)	CAverage (dBµV/m)	Limit (dBµV/m)	Margin (dB)	Meas. Time (ms)	Bandwidth (kHz)	Height (cm)	Pol	Azimuth (deg)	Elevation (deg)	Corr. (dB/m)
2364.360000	---	37.68	54.00	16.32	1000.0	1000.000	150.0	H	-141.0	-15.0	7.1
2364.360000	54.80	---	74.00	19.20	1000.0	1000.000	150.0	H	-141.0	-15.0	7.1
4880.087500	---	38.87	54.00	15.13	1000.0	1000.000	150.0	H	-125.0	-1.0	6.2
4880.087500	57.48	---	74.00	16.52	1000.0	1000.000	150.0	H	-125.0	-1.0	6.2

(Note: the peak at 2440 MHz is the wanted signal)

Radio Technology = WLAN b, Operating Frequency = mid,
Measurement range = 1 GHz - 26 GHz
(S01_BC02)

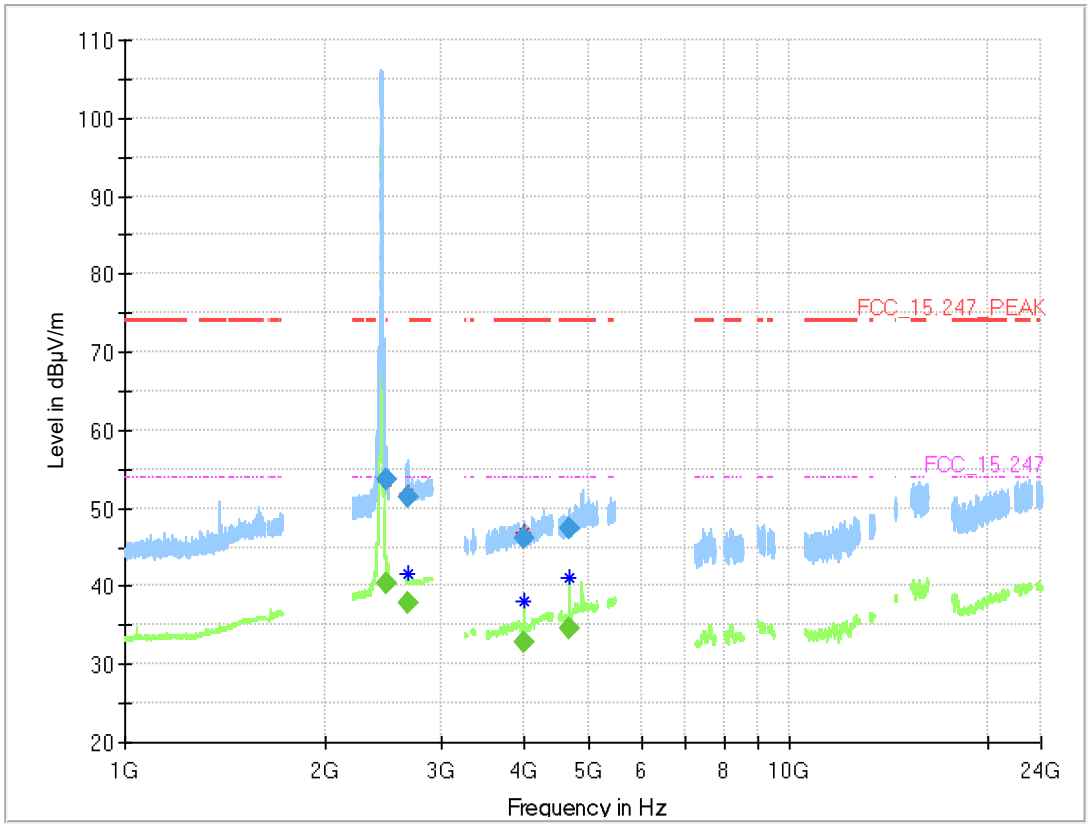

Final_Result

Frequency (MHz)	MaxPeak (dBµV/m)	CAverage (dBµV/m)	Limit (dBµV/m)	Margin (dB)	Meas. Time (ms)	Bandwidth (kHz)	Height (cm)	Pol	Azimuth (deg)	Elevation (deg)	Corr. (dB/m)
2483.500000	---	40.32	54.00	13.68	1000.0	1000.000	150.0	H	-126.0	15.0	7.6
2483.500000	53.76	---	74.00	20.24	1000.0	1000.000	150.0	H	-126.0	15.0	7.6
2661.370000	---	37.96	54.00	16.04	1000.0	1000.000	150.0	V	-38.0	79.0	8.5
2661.370000	51.32	---	---	---	1000.0	1000.000	150.0	V	-38.0	79.0	8.5
3999.275000	---	32.90	54.00	21.10	1000.0	1000.000	150.0	V	94.0	-8.0	3.9
3999.275000	46.18	---	74.00	27.82	1000.0	1000.000	150.0	V	94.0	-8.0	3.9
4666.237500	---	34.66	54.00	19.34	1000.0	1000.000	150.0	H	-182.0	78.0	5.6
4666.237500	47.32	---	74.00	26.68	1000.0	1000.000	150.0	H	-182.0	78.0	5.6

(Note: the peak at 2437 MHz is the wanted signal)

5.1.5 TEST EQUIPMENT USED

- Radiated Emissions FAR 2.4 GHz FCC

5.2 BAND EDGE COMPLIANCE RESTRICTED BANDS

Standard **FCC Part 15 Subpart C**

The test was performed according to:
ANSI C63.10, chapter 6.6.5

5.2.1 TEST DESCRIPTION

The test set-up was made in accordance to the general provisions of ANSI C63.10 in a typical installation configuration. The measurements were performed according the following sub-chapter of ANSI C63.10:

- Chapter 6.10.5

The Equipment Under Test (EUT) was set up on a non-conductive support (tilt device) at 1.5 m height in the fully-anechoic chamber.
All steps were performed with one height (1.5 m) of the receiving antenna only (procedure according ANSI C63.10, chapter 6.6.5.

Measurement above 1 GHz

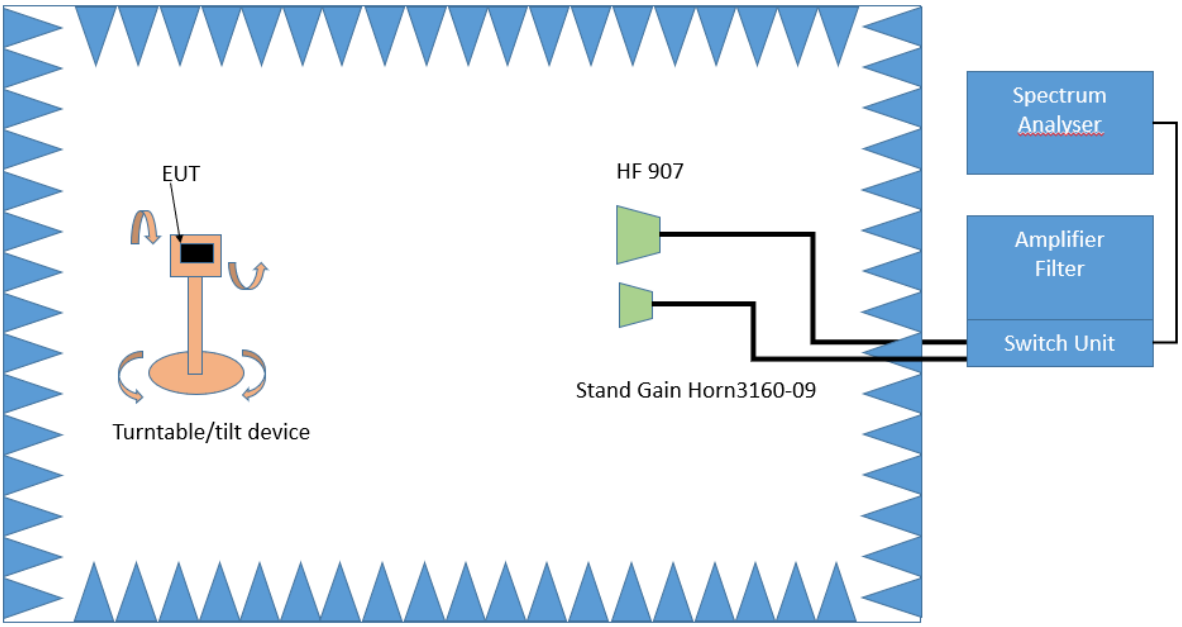

Test Setup; Spurious Emission Radiated (FAC), 1 GHz-26.5 GHz

Step 1:
The EUT is turned during the preliminary measurement across the elevation axis, with a step size of 90 °.
The turn table step size (azimuth angle) for the preliminary measurement is 45 °.
Spectrum analyser settings:
- Detector: Peak, Average
- RBW = 1 MHz
- VBW = 3 MHz

Step 2:
The turn table azimuth will slowly vary by ± 22.5°.
The elevation angle will slowly vary by ± 45°
Spectrum analyser settings:
- Detector: Peak

Step 3:
Spectrum analyser settings for step 3:
- Detector: Peak / CISPR Average
- Measured frequencies: in step 1 determined frequencies
- RBW = 1 MHz
- VBW = 3 MHz
- Measuring time: 1 s

5.2.2 TEST REQUIREMENTS / LIMITS

For band edges connected to a restricted band, the limits are specified in Section 15.209(a)

FCC Part 15, Subpart C, §15.209, Radiated Emission Limits

Frequency in MHz	Limit (µV/m)	Measurement distance (m)	Limits (dBµV/m)
0.009 – 0.49	2400/F(kHz)@300m	3	(48.5 – 13.8)@300m
0.49 – 1.705	24000/F(kHz)@30m	3	(33.8 – 23.0)@30m
1.705 – 30	30@30m	3	29.5@30m

The measured values are corrected with an inverse linear distance extrapolation factor (40 dB/decade) according FCC 15.31 (2).

Frequency in MHz	Limit (µV/m)	Measurement distance (m)	Limits (dBµV/m)
30 – 88	100@3m	3	40.0@3m
88 – 216	150@3m	3	43.5@3m
216 – 960	200@3m	3	46.0@3m
960 - 26000	500@3m	3	54.0@3m
26000 - 40000	500@3m	1	54.0@3m

The measured values above 26 GHz are corrected with an inverse linear distance extrapolation factor (20 dB/decade).

§15.35(b) ..., there is also a limit on the radio frequency emissions, as measured using instrumentation with a peak detector function, corresponding to 20 dB above the maximum permitted average limit....

Used conversion factor: Limit (dBµV/m) = 20 log (Limit (µV/m)/1µV/m)

5.2.3 TEST PROTOCOL

Ambient temperature: 30 °C
Air Pressure: 1018 hPa
Humidity: 49 %

BT LE 2 Mbit/s
Applied duty cycle correction (AV): 2.6 dB

Ch. No.	Ch. Center Freq. [MHz]	Band Edge Freq. [MHz]	Spurious Level [dBµV/m]	Detector	RBW [kHz]	Limit [dBµV/m]	Margin to Limit [dB]
38	2478	2483.5	59.8	PEAK	1000	74.0	14.3
38	2478	2483.5	44.6	AV	1000	54.0	9.4

WLAN g-Mode; 20 MHz; 6 Mbit/s
Applied duty cycle correction (AV): 0.1 dB

Ch. No.	Ch. Center Freq. [MHz]	Band Edge Freq. [MHz]	Spurious Level [dBµV/m]	Detector	RBW [kHz]	Limit [dBµV/m]	Margin to Limit [dB]
11	2462	2483.5	66.4	PEAK	1000	74.0	7.6
11	2462	2483.5	48.8	AV	1000	54.0	5.2

WLAN ax-Mode (SU-ER); 20 MHz; MCS0
Applied duty cycle correction (AV): 0.1 dB

Ch. No.	Ch. Center Freq. [MHz]	Band Edge Freq. [MHz]	Spurious Level [dBµV/m]	Detector	RBW [kHz]	Limit [dBµV/m]	Margin to Limit [dB]
11	2462	2483.5	67.9	PEAK	1000	74.0	6.1
11	2462	2483.5	43.6	AV	1000	54.0	10.4

Remark: Please see next sub-clause for the measurement plot.

5.2.4 MEASUREMENT PLOT (EXAMPLE PLOT, SHOWING WORST CASE, IF APPLICABLE)

Trace:
blue = Peak
green = AV

Marker:
Star = critical frequency, Rhombus = final Results

Radio Technology = Bluetooth LE 2 Mbps, Operating Frequency = high, Band Edge = high (S01_BC02)

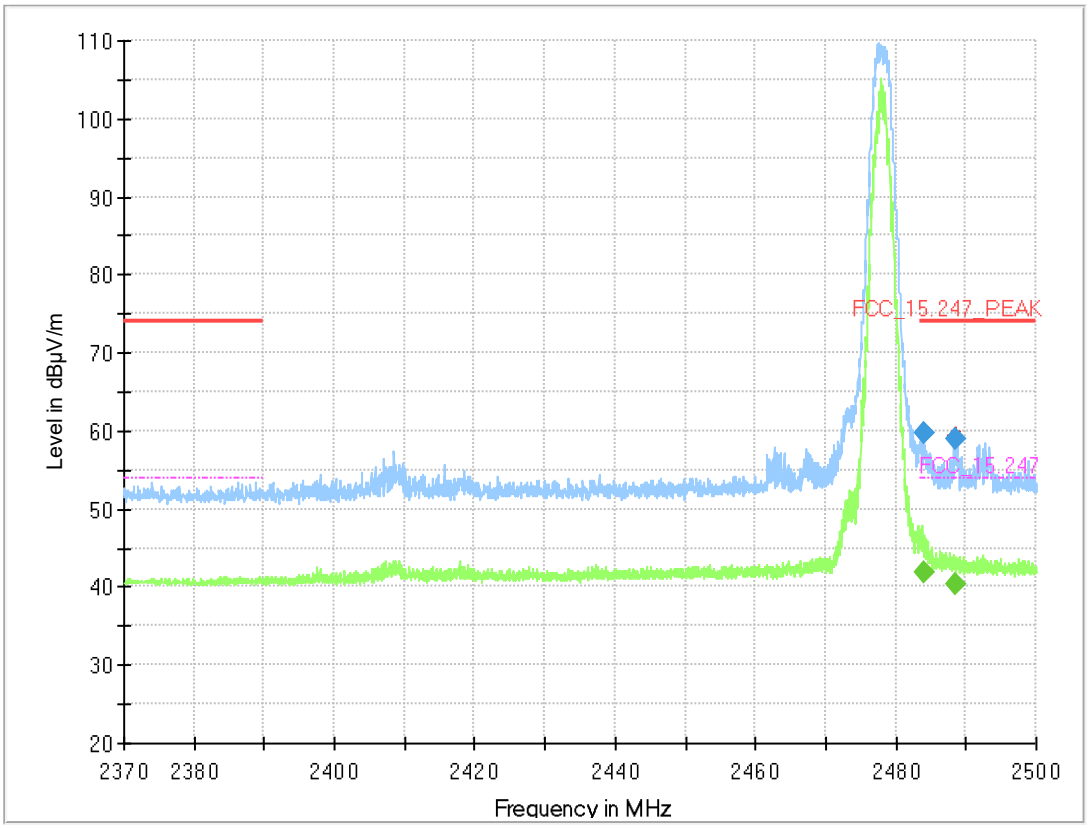

Final_Result

Frequency (MHz)	MaxPeak (dBµV/m)	CAverage (dBµV/m)	Limit (dBµV/m)	Margin (dB)	Meas. Time (ms)	Bandwidth (kHz)	Height (cm)	Pol	Azimuth (deg)	Elevation (deg)	Corr. (dB/m)
2483.900000	---	41.97	54.00	12.03	1000.0	1000.000	150.0	H	-144.0	-2.0	7.7
2483.900000	59.75	---	74.00	14.25	1000.0	1000.000	150.0	H	-144.0	-2.0	7.7
2488.400000	---	40.39	54.00	13.61	1000.0	1000.000	150.0	H	-139.0	-4.0	7.7
2488.400000	59.08	---	74.00	14.92	1000.0	1000.000	150.0	H	-139.0	-4.0	7.7

Radio Technology = WLAN g, Operating Frequency = high, Band Edge = high
(S01_BC02)

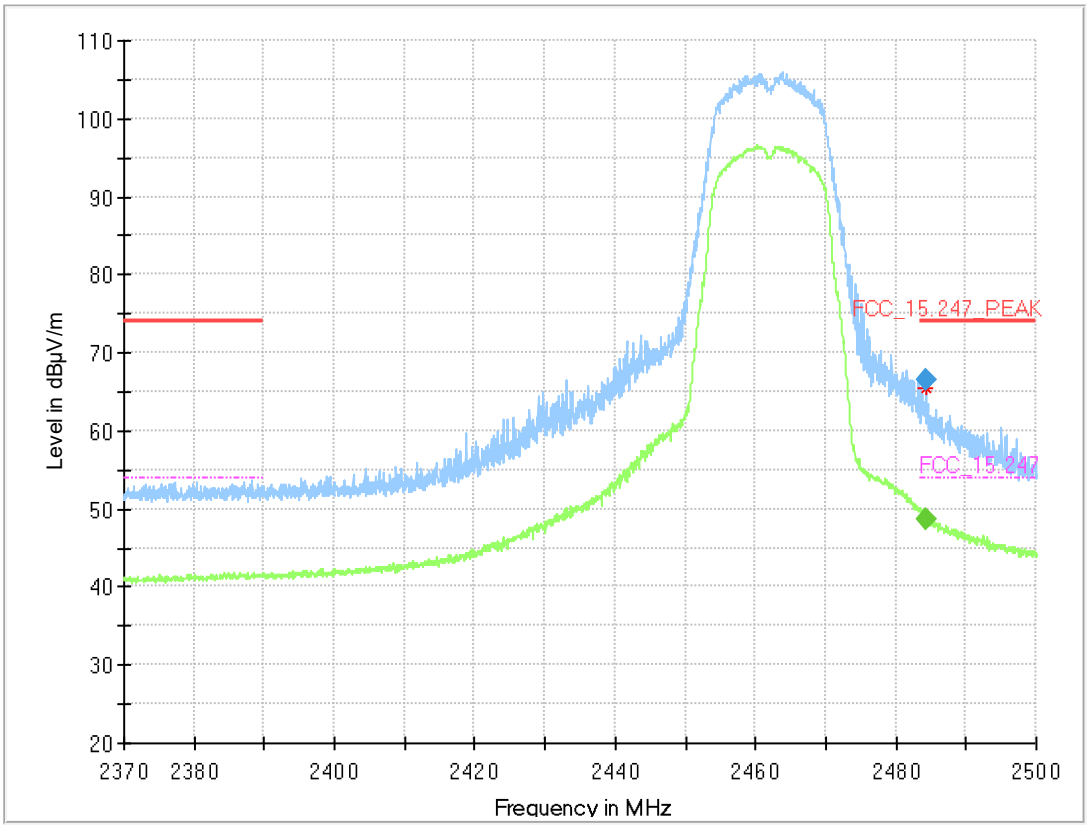

Final_Result

Frequency (MHz)	MaxPeak (dBµV/m)	CAverage (dBµV/m)	Limit (dBµV/m)	Margin (dB)	Meas. Time (ms)	Bandwidth (kHz)	Height (cm)	Pol	Azimuth (deg)	Elevation (deg)	Corr. (dB/m)
2484.300000	---	48.71	54.00	5.29	1000.0	1000.000	150.0	H	37.0	105.0	7.7
2484.300000	66.44	---	74.00	7.56	1000.0	1000.000	150.0	H	37.0	105.0	7.7

Radio Technology = WLAN ax 20 MHz (SU-ER), Operating Frequency = high, Band Edge = high (S01_BC02)

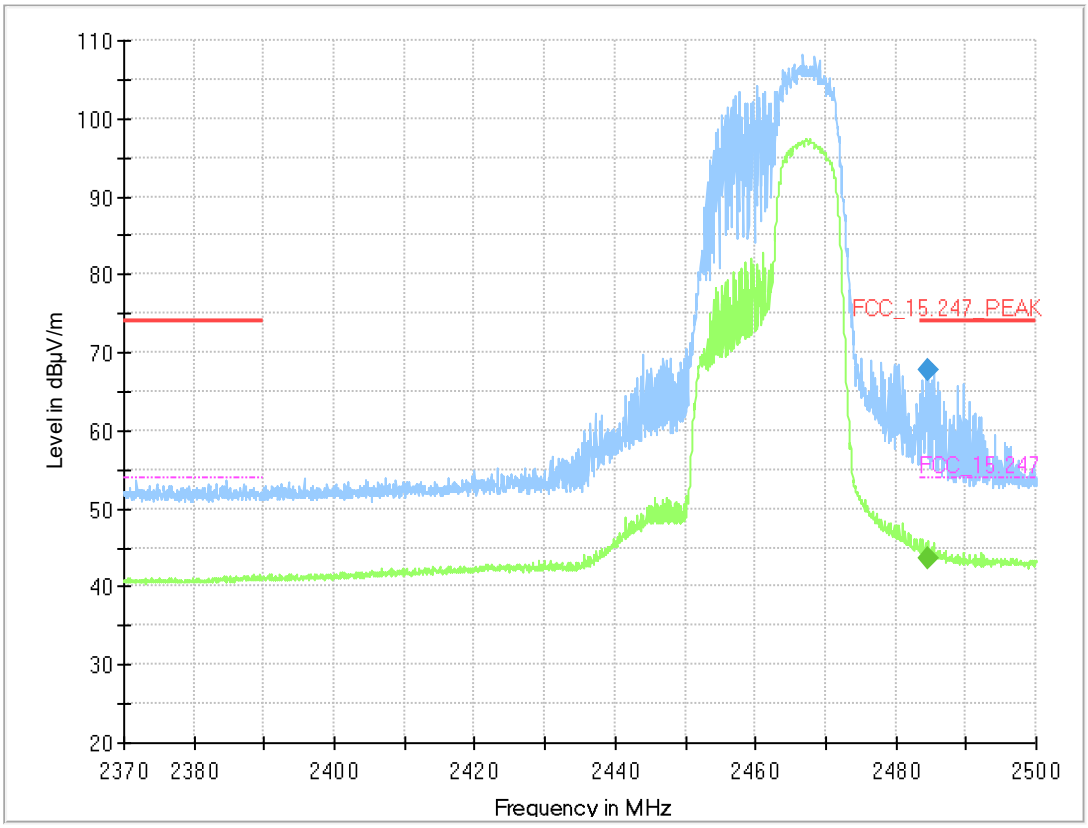

Final_Result

Frequency (MHz)	MaxPeak (dBµV/m)	CAverage (dBµV/m)	Limit (dBµV/m)	Margin (dB)	Meas. Time (ms)	Bandwidth (kHz)	Height (cm)	Pol	Azimuth (deg)	Elevation (deg)	Corr. (dB/m)
2484.650000	---	43.53	54.00	10.47	1000.0	1000.000	150.0	H	-139.0	-2.0	7.7
2484.650000	67.87	---	74.00	6.13	1000.0	1000.000	150.0	H	-139.0	-2.0	7.7

5.2.5 TEST EQUIPMENT USED

- Radiated Emissions FAR 2.4 GHz FCC

6 TEST EQUIPMENT

6.1 TEST EQUIPMENT HARDWARE

1 Radiated Emissions FAR 2.4 GHz FCC
Radiated emission tests for 2.4 GHz ISM devices in a fully anechoic room

Ref.No.	Device Name	Description	Manufacturer	Serial Number	Last Calibration	Calibration Due
1.1	Opus10 TPR (8253.00)	T/P Logger 13	Lufft Mess- und Regeltechnik GmbH	13936	2026-02	2028-02
1.2	HL 562 ULTRALOG	Biconical-log-per antenna (30 MHz - 3 GHz) with HL 562E biconicals	Rohde & Schwarz GmbH & Co. KG	830547/003	2025-04	2028-04
1.3	Innco Systems CO3000	Controller for bore sight mast FAC	innco systems GmbH	CO3000/1460/54740522/P	N/A	N/A
1.4	AMF-7D00101800-30-10P-R	Broadband Amplifier 100 MHz - 18 GHz	Miteq		N/A	N/A
1.5	Anechoic Chamber 03	FAR, 8.80m x 4.60m x 4.05m (l x w x h)	Albatross Projects	P26971-647-001-PRB	N/A	N/A
1.6	Fluke 177	Digital Multimeter 03 (Multimeter)	Fluke Europe B.V.	86670383	2025-09	2027-09
1.7	CS-RUB6	Rubidium Frequency Standard	Rohde & Schwarz GmbH & Co. KG	100451	2025-07	2027-07
1.8	JS4-18002600-32-5P	Broadband Amplifier 18 GHz - 26 GHz	Miteq	849785	N/A	N/A
1.9	FSW43	Spectrum Analyzer	Rohde & Schwarz GmbH & Co. KG	103779	2024-12	2026-12
1.10	EP 1200/B, NA/B1	AC Source, Amplifier with integrated variable Oscillator	Spitzenberger & Spies GmbH & Co. KG	B6278	N/A	N/A
1.11	3160-09	Standard Gain / Pyramidal Horn Antenna 26.5 GHz	EMCO Elektronic GmbH	00083069	N/A	N/A
1.12	WHKX 7.0/18G-8SS	High Pass Filter	Wainwright Instruments GmbH	09	N/A	N/A
1.13	MA3000/0800-XP-ET-compact	Bore Sight Antenna Mast	innco systems GmbH	9210522	N/A	N/A
1.14	TT 1.5 WI	Turn Table	Maturo GmbH	-	N/A	N/A
1.15	5HC3500/18000-1.2-KK	High Pass Filter	Trilithic	200035008	N/A	N/A
1.16	Opus 20 THI (8120.00)	ThermoHygro Datalogger	Lufft Mess- und Regeltechnik GmbH	115.0318.0802.033	2025-11	2027-11
1.17	TD1.5-10kg	EUT Tilt Device (Rohacell)	Maturo GmbH	TD1.5-10kg/024/3790709	N/A	N/A

Ref.No.	Device Name	Description	Manufacturer	Serial Number	Last Calibration	Calibration Due
1.18	DBLNA401001800C	Broadband Amplifier (AMP5)		231205000032	N/A	N/A
1.19	AFS42-00101800-25-S-42	Broadband Amplifier 25 MHz - 18 GHz	Miteq	2035324	N/A	N/A
1.20	HF 907	Double-ridged horn	Rohde & Schwarz	102444	2024-10	2027-10

The calibration interval is the time interval between “Last Calibration” and “Calibration Due”

6.2 TEST EQUIPMENT SOFTWARE

Semi-Anechoic Chamber:	
Software	Version
EMC32 Measurement Software	10.60.10
INNCO Mast Controller	1.02.62
INNCO Mast Height	34.10
INNCO Mast Elevation	36.11
MATURO Controller	1.30
MATURO Mast	12.19
MATURO Turn-Table	2.02
Fully-Anechoic Chamber:	
Software	Version
EMC32 Measurement Software	10.60.10
MATURO Controller	1.30
MATURO Turn-Unit	11.10
MATURO Mast	12.10
MATURO Turntable	12.11
INNCO Controller	1.03.02
INNCO Mast Height	34.10
INNCO Mast Elevation	36.11
TS 8997	
WMS32 Measurement Software	11.70.00 + Hotfix 01 (till 2026-03-12), 12.30.00
Conducted AC Emissions:	
Software	Version
EMC32 Measurement Software	10.60.20

7 ANTENNA FACTORS, CABLE LOSS AND SAMPLE CALCULATIONS

This chapter contains the antenna factors with their corresponding path loss of the used measurement path for all antennas as well as the insertion loss of the LISN.

7.1 ANTENNA R&S HF907 (1 GHZ – 18 GHZ)

Frequency	AF R&S HF907	Corr.	cable loss 1 (relay + cable inside chamber)	cable loss 2 (outside chamber)	cable loss 3 (switch unit, atten-uator & pre-amp)	cable loss 4 (to receiver)		
MHz	dB (1/m)	dB	dB	dB	dB	dB		
1000	24.4	-19.4	0.99	0.31	-21.51	0.79		
2000	28.5	-17.4	1.44	0.44	-20.63	1.38		
3000	31.0	-16.1	1.87	0.53	-19.85	1.33		
4000	33.1	-14.7	2.41	0.67	-19.13	1.31		
5000	34.4	-13.7	2.78	0.86	-18.71	1.40		
6000	34.7	-12.7	2.74	0.90	-17.83	1.47		
7000	35.6	-11.0	2.82	0.86	-16.19	1.46		

Frequency	AF R&S HF907	Corr.	cable loss 1 (relay inside chamber)	cable loss 2 (inside chamber)	cable loss 3 (outside chamber)	cable loss 4 (switch unit, atten-uator & pre-amp)	cable loss 5 (to receiver)	used for FCC 15.247
MHz	dB (1/m)	dB	dB	dB	dB	dB	dB	
3000	31.0	-23.4	0.47	1.87	0.53	-27.58	1.33	
4000	33.1	-23.3	0.56	2.41	0.67	-28.23	1.31	
5000	34.4	-21.7	0.61	2.78	0.86	-27.35	1.40	
6000	34.7	-21.2	0.58	2.74	0.90	-26.89	1.47	
7000	35.6	-19.8	0.66	2.82	0.86	-25.58	1.46	

Frequency	AF R&S HF907	Corr.	cable loss 1 (relay inside chamber)	cable loss 2 (High Pass)	cable loss 3 (pre-amp)	cable loss 4 (inside chamber)	cable loss 5 (outside chamber)	cable loss 6 (to receiver)
MHz	dB (1/m)	dB	dB	dB	dB	dB	dB	dB
7000	35.6	-57.3	0.56	1.28	-62.72	2.66	0.94	1.46
8000	36.3	-56.3	0.69	0.71	-61.49	2.84	1.00	1.53
9000	37.1	-55.3	0.68	0.65	-60.80	3.06	1.09	1.60
10000	37.5	-56.2	0.70	0.54	-61.91	3.28	1.20	1.67
11000	37.5	-55.3	0.80	0.61	-61.40	3.43	1.27	1.70
12000	37.6	-53.7	0.84	0.42	-59.70	3.53	1.26	1.73
13000	38.2	-53.5	0.83	0.44	-59.81	3.75	1.32	1.83
14000	39.9	-56.3	0.91	0.53	-63.03	3.91	1.40	1.77
15000	40.9	-54.1	0.98	0.54	-61.05	4.02	1.44	1.83
16000	41.3	-54.1	1.23	0.49	-61.51	4.17	1.51	1.85
17000	42.8	-54.4	1.36	0.76	-62.36	4.34	1.53	2.00
18000	44.2	-54.7	1.70	0.53	-62.88	4.41	1.55	1.91

Sample calculation

E (dB µV/m) = U (dB µV) + AF (dB 1/m) + Corr. (dB)
U = Receiver reading
AF = Antenna factor
Corr. = sum of single correction factors of used cables, switch unit, distance correction, amplifier (if applicable)
Linear interpolation will be used for frequencies in between the values in the table.
Tables show an extract of values.

7.2 ANTENNA EMCO 3160-09 (18 GHZ – 26.5 GHZ)

Frequency	AF EMCO 3160-09	Corr.	cable loss 1 (inside chamber)	cable loss 2 (pre-amp)	cable loss 3 (inside chamber)	cable loss 4 (switch unit)	cable loss 5 (to receiver)
MHz	dB (1/m)	dB	dB	dB	dB	dB	dB
18000	40.2	-23.5	0.72	-35.85	6.20	2.81	2.65
18500	40.2	-23.2	0.69	-35.71	6.46	2.76	2.59
19000	40.2	-22.0	0.76	-35.44	6.69	3.15	2.79
19500	40.3	-21.3	0.74	-35.07	7.04	3.11	2.91
20000	40.3	-20.3	0.72	-34.49	7.30	3.07	3.05
20500	40.3	-19.9	0.78	-34.46	7.48	3.12	3.15
21000	40.3	-19.1	0.87	-34.07	7.61	3.20	3.33
21500	40.3	-19.1	0.90	-33.96	7.47	3.28	3.19
22000	40.3	-18.7	0.89	-33.57	7.34	3.35	3.28
22500	40.4	-19.0	0.87	-33.66	7.06	3.75	2.94
23000	40.4	-19.5	0.88	-33.75	6.92	3.77	2.70
23500	40.4	-19.3	0.90	-33.35	6.99	3.52	2.66
24000	40.4	-19.8	0.88	-33.99	6.88	3.88	2.58
24500	40.4	-19.5	0.91	-33.89	7.01	3.93	2.51
25000	40.4	-19.3	0.88	-33.00	6.72	3.96	2.14
25500	40.5	-20.4	0.89	-34.07	6.90	3.66	2.22
26000	40.5	-21.3	0.86	-35.11	7.02	3.69	2.28
26500	40.5	-21.1	0.90	-35.20	7.15	3.91	2.36

Sample calculation

E (dB µV/m) = U (dB µV) + AF (dB 1/m) + Corr. (dB)
U = Receiver reading
AF = Antenna factor
Corr. = sum of single correction factors of used cables, switch unit, distance correction, amplifier (if applicable)
Linear interpolation will be used for frequencies in between the values in the table.
Table shows an extract of values.

8 MEASUREMENT UNCERTAINTIES

Test Case	Parameter	Uncertainty
AC Power Line	Power	± 3.4 dB
Field Strength of spurious radiation	Power	± 5.5 dB
6 dB / 26 dB / 99% Bandwidth	Power Frequency	± 2.9 dB ± 11.2 kHz
Conducted Output Power	Power	± 2.2 dB
Band Edge Compliance	Power Frequency	± 2.2 dB ± 11.2 kHz
Frequency Stability	Frequency	± 25 Hz
Power Spectral Density	Power	± 2.2 dB

The measurement uncertainties for all parameters are calculated with an expansion factor (coverage factor) k = 1.96. This means, that the true value is in the corresponding interval with a probability of 95 %.

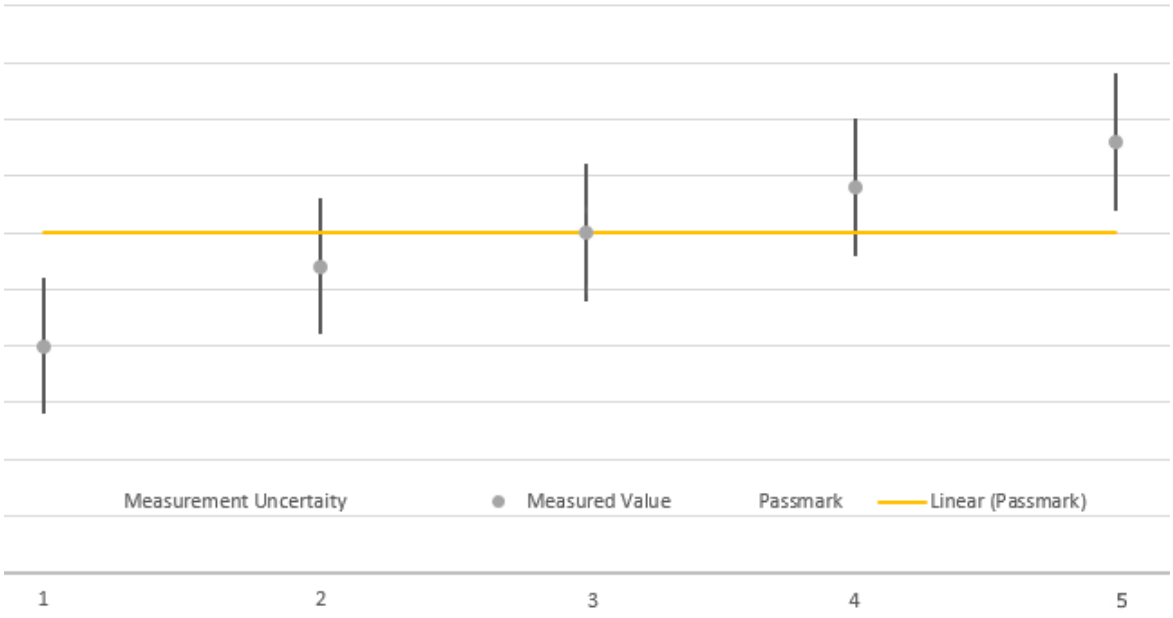

The verdicts in this test report are given according the above diagram:

Case	Measured Value	Uncertainty Range	Verdict
1	below pass mark	below pass mark	Passed
2	below pass mark	within pass mark	Passed
3	on pass mark	within pass mark	Passed
4	above pass mark	within pass mark	Failed
5	above pass mark	above pass mark	Failed

That means, the laboratory applies, as decision rule (see ISO/IEC 17025:2017), the so-called shared risk principle.

9 PHOTO REPORT

Please see separate photo report.

**********END OF TEST REPORT**********