# Antenna Pattern Measurement Test Report for TESTO 0554 1111

Report Reference: MDE_TESTO_1610_BT_1
Date: 01.09.2017

**Test Laboratory:**
7layers GmbH
Borsigstrasse 11
40880 Ratingen
Germany

Deutsche Akkreditierungsstelle
D-PL-12140-01-00

Note:
The following test results relate only to the devices specified in this document. This report shall not be reproduced in parts without the written approval of the test laboratory.

# Content:


**1 TEST LAB DECLARATION 3**

**2 SIGNATURES 3**

**3 PROJECT AND RESULT SUMMARY 4**

**4 BRIEF DESCRIPTION OF SETTINGS AND TEST METHOD 5**

4.1 References and Standards Used 5

4.2 Test Procedure TRP 5

4.3 Definitions 6

**5 DETAILED RADIATED TEST RESULTS AND PATTERN 6**

5.1 Equipment List 6

5.2 Radiation Pattern TRP Bluetooth 2402 MHz 7

5.3 Radiation Pattern TRP Bluetooth 2440 MHz 9

5.4 Radiation Pattern TRP Bluetooth 2480 MHz 11

# 1 Test Lab Declaration

**All test results stated relate only to the device tested.**

**The test report must usually be reproduced in full. Reproduction of an excerpt is herby granted, but only when:**

- **in the resulting document it's status (being an excerpt) is clearly stated and**
- **in minimum chapter 3 is included completely.**

# 2 SIGNATURES

| | | | |
|---|---|---|---|
| Responsible for Accreditation Scope: | Robert Machulec | Responsible for Test Report: | Dieter Sütthoff |

# 3 Project and Result Summary

| | | | |
|---|---|---|---|
| DUT | Testo 0554 1111 | DUT SN | 0060989994 |
| Test lab | 7layers GmbH<br>Borsigstr. 11<br>40880 Ratingen<br>Germany | Set up | free space |
| | | Test start | 30.08.2017 |
| Customer | Testo SE & Co. KGaA<br>Testo-Straße 1<br>79853 Lenzkrich<br>Germany | Report date | 01.09.2017 |
| | | Report by | Dieter Sütthoff |
| | | Approved by | Robert Machulec |

| | |
|---|---|
| HW Version | 4.0.b |
| SW Version | 0.07 |

| Bluetooth | | | |
|---|---|---|---|
| **Positiv Peak Detector Unmodulated** | **2402 MHz** | **2440 MHz** | **2480 MHz** |
| **Antenna Port Input Power (Conducted Sample)** | **-1.27** | **-1.42** | **-1.96** |
| Tot. Rad. Pwr. (dBm) | -7.9 | -8.7 | -9.1 |
| Peak EIRP (dBm) | **-3.0** | **-3.8** | **-4.3** |
| Directivity (dBi) | 5.0 | 5.0 | 4.8 |
| Efficiency (dB) | -6.6 | -7.3 | -7.1 |
| Efficiency (%) | 22 | 19 | 19 |
| **Gain (dBi)** | **-1.7** | **-2.4** | **-2.3** |

Tab. 1: Test result summary Bluetooth

Fig. 1: Photo of DUT.

# 4 Brief Description of Settings and Test Method

## 4.1 References and Standards Used

[1] CTIA: "Test Plan for Wireless Device Over the Air Performance", Revision Number 3.6.2, 05/2017.

[2] 3GPP TS 25.101: "User Equipment (UE) radio transmission and reception (FDD)", (Release 11), Version V11.2.0, June 2012.

[3] 7 layers document: "Test Procedure for Over the Air Performance Estimation Applied by the OTA Test Lab at 7 layers Ratingen", Version January 2009.

## 4.2 Test Procedure TRP

The method of measurement for radiated RF power and receiver performance are based on the principals of the test standard CTIA: "Test Plan for Mobile Station Over the Air Performance" [1].

***In general the following approach is applied for TRP measurements:***

- For TRP measurement put OUT in a mode where it transmitting periodical RF energy.
- Rotate the EUT in all room directions with a angle grid of 15°.
- Gather power data for both, vertical and horizontal polarization.
- Calculate total radiated power by integrating over the whole sphere as outlined in [1].

The test setup was placed at the turning device inside a fully anechoic chamber. The object under test (OUT) was set to transmit permanently signal on specific frequencies

The total radiated power (TRP) of the test setup was measured in all angle direction (3D) using a step width of 15° and using two measurement antenna polarizations (vertical and horizontal).

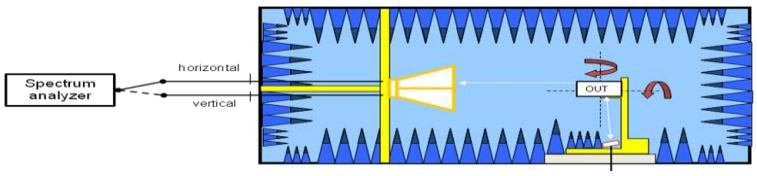


Fig. 1: Block diagram for TRP measurement

### 4.3 Definitions

| | |
|---|---|
| 3GPP | 3rd Generation Partnership Project |
| BER | Bit error rate or bit error ratio |
| BS | Base station |
| CTIA | Cellular Telecommunications & Internet Association |
| DUT | Device under test |
| FS | Free space |
| TP | Talk position (phone is situated at SAM = human head phantom) |
| TRP | Total Radiated Power |
| EIRP | Effective Isotropic Radiated Power |
| TRS | Total Radiated Sensitivity (same as TIS in CTIA), loss of link level |
| EIRS | Effective Isotropic Radiated Sensitivity |

## 5 Detailed Radiated Test Results and Pattern

### 5.1 Equipment List

**For TRP measurements:**

| | | |
|---|---|---|
| Antenna: | Dual polarized horn ETS3164-03 by ETS | SN 00052619 |
| Receiver: | FSP3 spectrum analyzer by R&S for 2.4 GHz | SN 838164/004 |

**Orientation of EUT compared to a standard device**

For orientation of the EUT in the result pictures below the following photos illustrate the used orientation compared to a standard device:

Fig. 2: Photo orientation of DUT compared to a phone.

## 5.2 Radiation Pattern TRP Bluetooth 2402 MHz

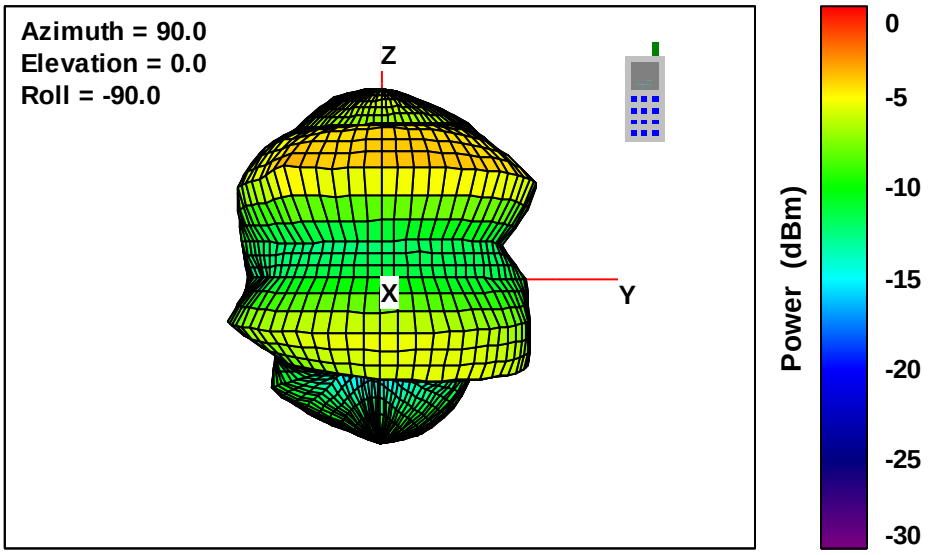


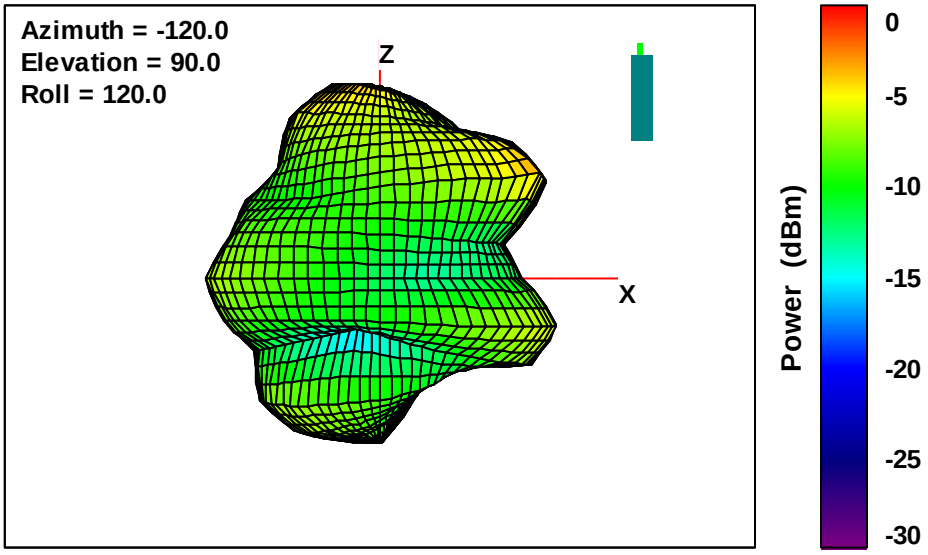

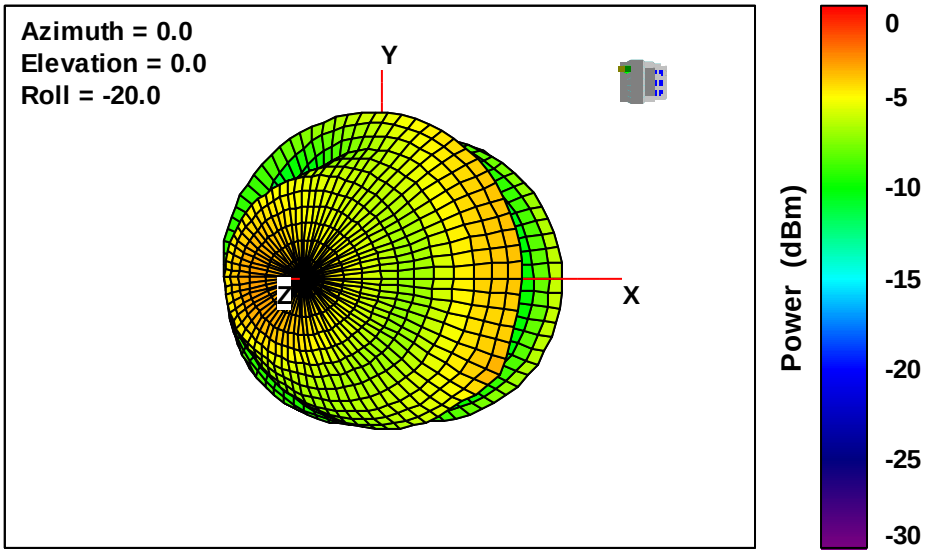


Fig. 3: 2402 MHz 3D Radiated pattern orientation of DUT compared to a phone.

## 5.3 Radiation Pattern TRP Bluetooth 2440 MHz

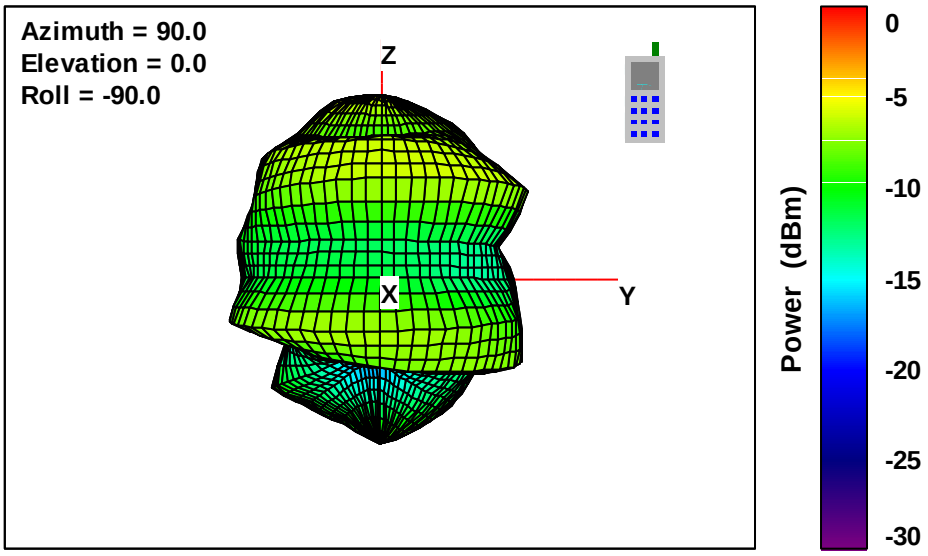


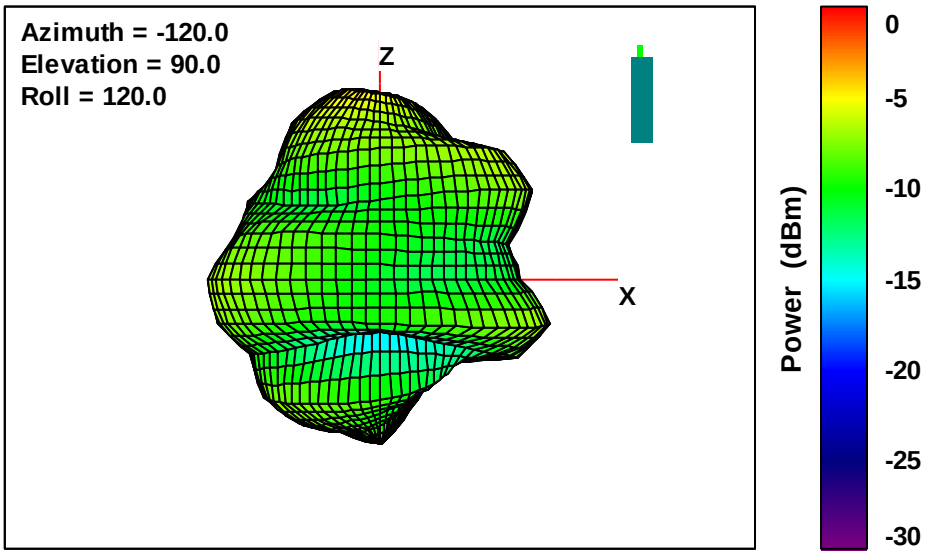

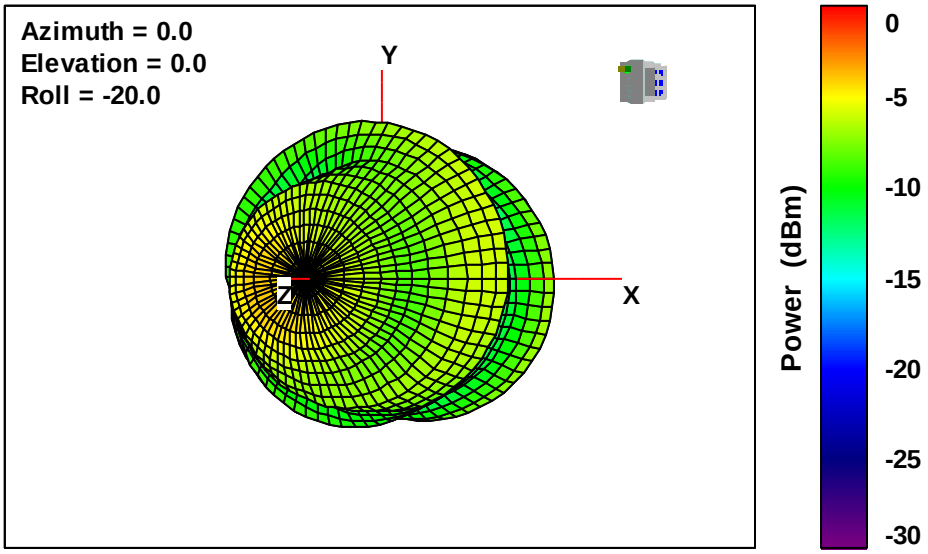


Fig. 4: 2440 MHz 3D Radiated pattern orientation of DUT compared to a phone.

## 5.4 Radiation Pattern TRP Bluetooth 2480 MHz

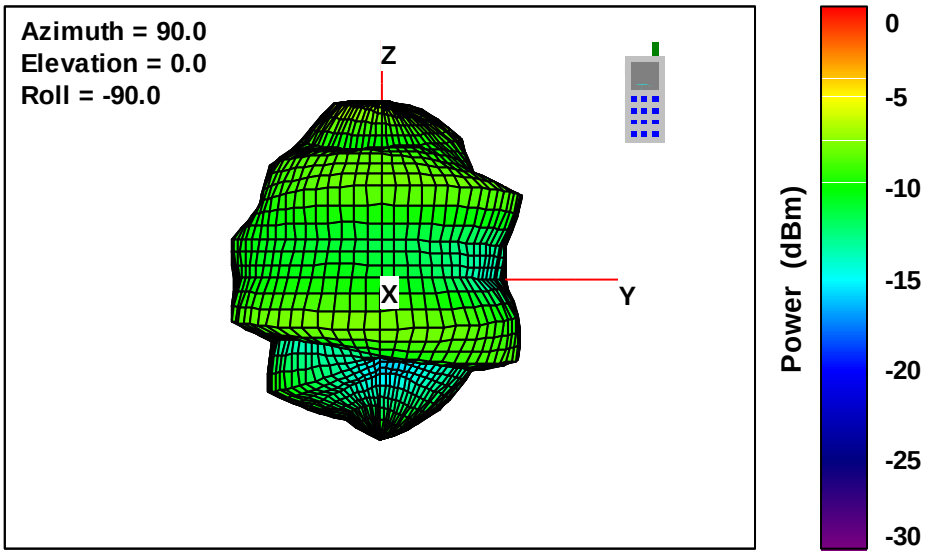


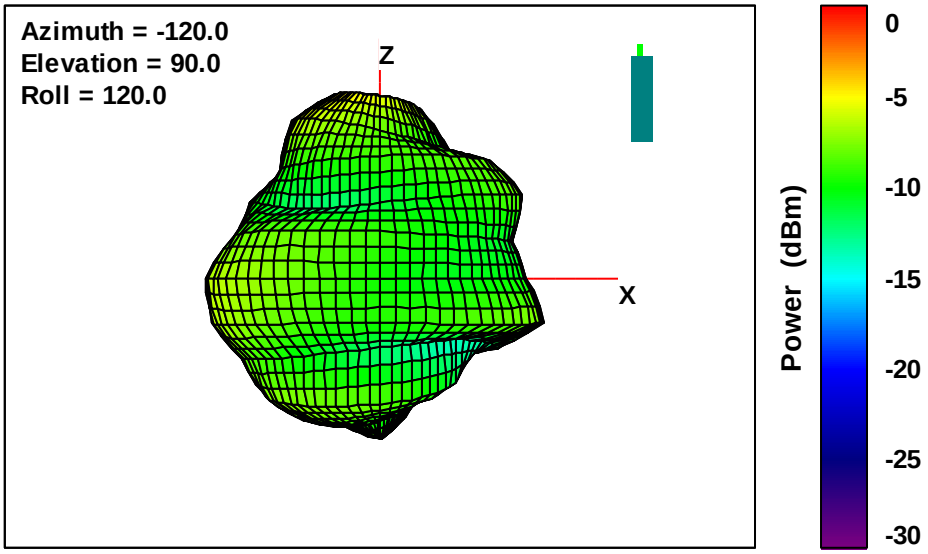

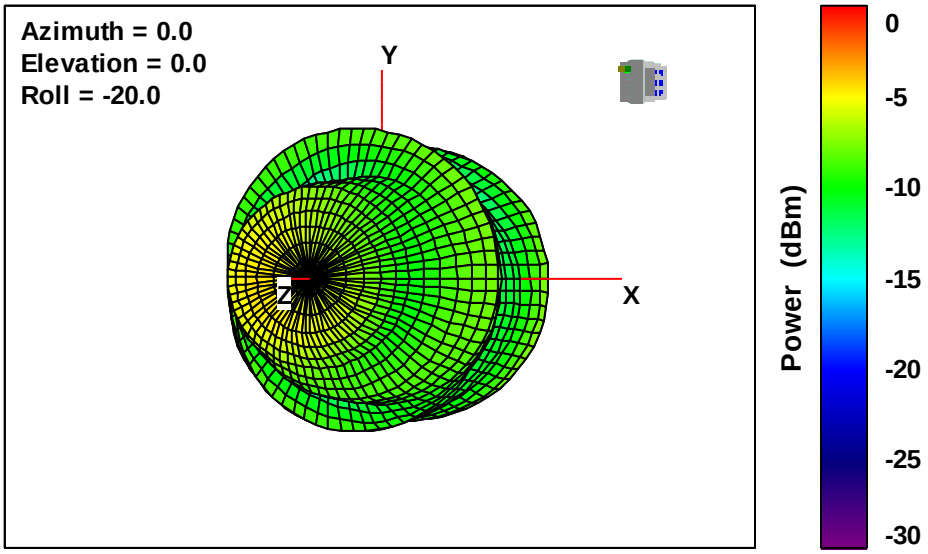


Fig. 5: 2480 MHz 3D Radiated pattern orientation of DUT compared to a phone.