testo 550s
Model No:0564 5500

FCC ID:WAF-05645500
IC:6127B-05645500

www.testo.com

3

5

1

4x

4

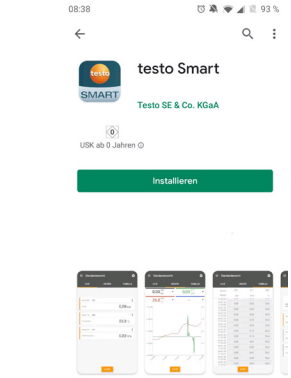

www.testo.com/de-DE/
services/download-center

2

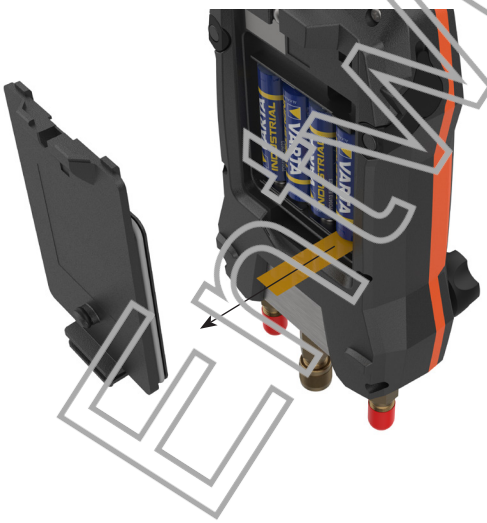

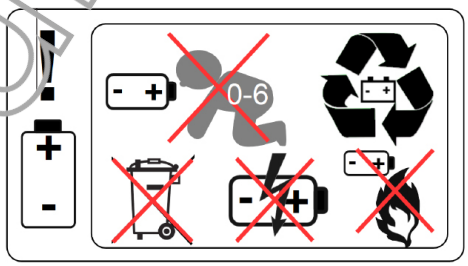

Configuration screen

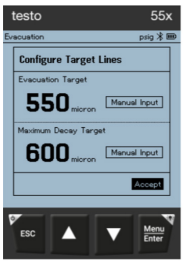

With smart probes

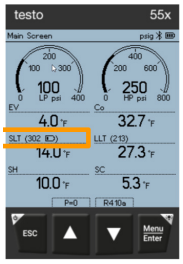

				°C		bar (psi)
212x112,5x62,8 mm	ca. 1300	4AA GP Alkaline 100hours	IP 54	-20°C...+50°C SD -20°C...+60°C	PA66 +30%GF TPE ABS	-1...60 (-14...870)

EATWUNFORMINGLY

Approval and Certification

Product 产品名称	testo 550s
Mat.-No. 型号	0564 5500
Date 日期	13.10.2020

The use of the wireless module is subject to the regulations and stipulations of the respective country of use, and the module may only be used in countries for which a country certification has been granted. The user and every owner has the obligation to adhere to these regulations and prerequisites for use, and acknowledges that the re-sale, export, import etc. in particular in countries without wireless permits, is his responsibility.

Country	Comments	
Australia		E 1561
Canada	IC: 6127B-05645500 See IC Warnings	
Europa + EFTA	CE The EU Declaration of Conformity can be found on the testo homepage www.testo.com under the product specific downloads. EU countries: Belgium (BE), Bulgaria (BG), Denmark (DK), Germany (DE), Estonia (EE), Finland (FI), France (FR), Greece (GR), Ireland (IE), Italy (IT), Latvia (LV), Lithuania (LT), Luxembourg (LU), Malta (MT), Netherlands (NL), Austria (AT), Poland (PL), Portugal (PT), Romania (RO), Sweden (SE), Slovakia (SK), Slovenia (SI), Spain (ES), Czech Republic (CZ), Hungary (HU), United Kingdom (GB), Republic of Cyprus (CY). EFTA countries: Iceland, Liechtenstein, Norway, Switzerland WEEE Reg. no.: DE 75334352	
Hongkong	Authorized	
Turkey	Authorized	
USA	FCC FCC ID: WAF-05645500 See FCC Warnings	
Japan	R 201-200722 See Japan Information	

	Feature 特征与参数	Values 数值
Bluetooth®-Information	Bluetooth®-Range/ 范围	typical 100 m (free field/ 无障碍场地)
	radio type 型号	Bluetooth® Low Energy (BLE) 5.0
	company 制造商	Lierda LSD4BT-S98BMRSP01
	RF Band 射频频段	2402 – 2480MHz
	power output 输出功率	
	Antenna gain 天线增益	PIFA Antenna 2.43dBi

	Feature 特征与参数	Values 数值
Bluetooth®-SIG Listing	Declaration ID	D051404
	member company	Testo SE & Co. KGaA

IC Warnings

CAN ICES-003(B)/NMB-003(B):
This Class B digital apparatus complies with Canadian ICES-003.

Cet appareil numérique de la classe [B] est conforme à la norme NMB-003 du Canada.

RSS-Gen & RSS-247 statement:
This device complies with Industry Canada licence-exempt RSS standard(s).
Operation is subject to the following two conditions:
(1) this device may not cause interference, and
(2) this device must accept any interference, including interference that may cause undesired operation of the device.

Le présent appareil est conforme aux CNR d'Industrie Canada applicables aux appareils radio exempts de licence.
L'exploitation est autorisée aux deux conditions suivantes :
(1) l'appareil ne doit pas produire de brouillage, et
(2) l'utilisateur de l'appareil doit accepter tout brouillage radioélectrique subi, même si le brouillage est susceptible d'en compromettre le fonctionnement.

Caution: Radio Frequency Radiation Exposure
This equipment complies with IC radiation exposure limits set forth for an uncontrolled environment and meets the IC radio frequency (RF) Exposure Guidelines.

Co-Location:
This transmitter must not be co-located or operated in conjunction with any other antenna or transmitter.

Attention : exposition au rayonnement de radiofréquences
Cet équipement est conforme aux limites d'exposition aux radiofréquences IC fixées pour un environnement non contrôlé et aux Lignes directrices relatives à l'exposition aux radiofréquences (RF).
Co-location
Ce transmetteur ne peut pas être installé en colocation ou être utilisé avec une autre antenne ou transmetteur, quel qu'en soit le type.

FCC Warnings
Information from the FCC (Federal Communications Commission)
For your own safety
Shielded cables should be used for a composite interface. This is to ensure continued protection against radio frequency interference.

FCC warning statement
This equipment has been tested and found to comply with the limits for a Class B digital device, pursuant to Part 15 of the FCC Rules. These limits are designed to provide reasonable protection against harmful interference in a residential installation. This equipment generates, uses and can radiate radio frequency energy and, if not installed and used in accordance with the instructions, may cause harmful interference to radio communications. However, there is no guarantee that interference will not occur in a particular installation. If this equipment does cause harmful interference to radio or television reception, which can be determined by turning the equipment off and on, the user is encouraged to try to correct the interference by one or more of the following measures:

- Reorient or relocate the receiving antenna.
- Increase the separation between the equipment and receiver.
- Connect the equipment into an outlet on a circuit different from that to which the receiver is connected.
- Consult the dealer or an experienced radio/TV technician for help.

Caution
Changes or modifications not expressly approved by the party responsible for compliance could void the user's authority to operate the equipment. Shielded interface cable must be used in order to comply with the emission limits.

Warning
This device complies with Part 15 of the FCC Rules.
Operation is subject to the following two conditions:
(1) this device may not cause harmful interference, and
(2) this device must accept any interference received, including interference that may cause undesired operation.

Caution: Radio Frequency Radiation Exposure
This equipment complies with FCC radiation exposure limits set forth for an uncontrolled environment and meets the FCC radio frequency (RF) Exposure Guidelines.

Co-Location:
This transmitter must not be co-located or operated in conjunction with any other antenna or transmitter.

Japan Information
当該機器には電波法に基づく、技術基準適合証明等を受けた特定無線設備を装着している。