PRELIMINARY

CYBLE-214015-01

EZ-BLE™ PSoC® Module

General Description

The Cypress CYBLE-214015-01 is a fully certified and qualified module supporting Bluetooth® Low Energy (BLE) wireless communication. The CYBLE-214015-01 is a turnkey solution and includes onboard crystal oscillators, trace antenna, passive components, and the Cypress PSoC® 4 BLE. Refer to the PSoC® 4 BLE datasheet for additional details on the capabilities of the PSoC 4 BLE device used on this module.

The EZ-BLE™ PSoC® module is a scalable and reconfigurable platform architecture. It combines programmable and reconfigurable analog and digital blocks with flexible automatic routing. The CYBLE-214015-01 also includes digital programmable logic, high-performance analog-to-digital conversion (ADC), opamps with comparator mode, and standard communication and timing peripherals.

The CYBLE-214015-01 includes a royalty-free BLE stack compatible with Bluetooth 4.2 and provides up to 25 GPIOs in a small 11 × 11 × 1.80 mm package. The CYBLE-214015-01 is drop-in compatible with the CYBLE-014008-00 and CYBLE-214009-00 EZ-BLE Modules.

The CYBLE-214015-01 is a complete solution and an ideal fit for applications seeking a highly integrated BLE wireless solution.

Module Description

- Module size: 11.0 mm × 11.0 mm × 1.80 mm (with shield)
- Drop-in compatible with CYBLE-014008-00 and CYBLE-214009-00
- 256-KB flash memory, 32-KB SRAM memory
- Up to 25 GPIOs configurable as open drain high/low, pull-up/pull-down, HI-Z analog, HI-Z digial, or strong output
- Bluetooth 4.2 qualified single-mode module
  - QDID: 79480
  - Declaration ID: D029646
- Certified to FCC, CE, MIC, KC, and IC regulations
- Industrial temperature range: –40 °C to +85 °C
- 32-bit processor (0.9 DMIPS/MHz) with single-cycle 32-bit multiply, operating at up to 48 MHz
- Watchdog timer with dedicated internal low-speed oscillator (ILO)
- Two-pin SWD for programming

Power Consumption

- TX output power: –18 dbm to +3 dbm
- Received signal strength indicator (RSSI) with 1-dB resolution
- TX current consumption of 15.6 mA (radio only, 0 dbm)
- RX current consumption of 16.4 mA (radio only)
- Low power mode support
  - Deep Sleep: 1.3 µA with watch crystal oscillator (WCO) on
  - Hibernate: 150 nA with SRAM retention
  - Stop: 60 nA with XRES wakeup

Programmable Analog

- Four opamps with reconfigurable high-drive external and high-bandwidth internal drive, comparator modes, and ADC input buffering capability; can operate in Deep-Sleep mode
- 12-bit, 1-Msps SAR ADC with differential and single-ended modes; channel sequencer with signal averaging
- Two current DACs (IDACs) for general-purpose or capacitive sensing applications on any pin
- One low-power comparator that operate in Deep-Sleep mode

Programmable Digital

- Four programmable logic blocks called universal digital blocks, (UDBs), each with eight macrocells and datapath
- Cypress-provided peripheral Component library, user-defined state machines, and Verilog input

Capacitive Sensing

- Cypress CapSense Sigma-Delta (CSD) provides best-in-class SNR (> 5:1) and liquid tolerance
- Cypress-supplied software component makes capacitive-sensing design easy
- Automatic hardware-tuning algorithm (SmartSense™)

Segment LCD Drive

- LCD drive supported on all GPIOs (common or segment)
- Operates in Deep-Sleep mode with four bits per pin memory

Serial Communication

- Two independent runtime reconfigurable serial communication blocks (SCBs) with I^2C, SPI, or UART functionality

Timing and Pulse-Width Modulation

- Four 16-bit timer, counter, pulse-width modulator (TCPWM) blocks
- Center-aligned, Edge, and Pseudo-random modes
- Comparator-based triggering of Kill signals for motor drive and other high-reliability digital logic applications

Up to 25 Programmable GPIOs

- Any GPIO pin can be CapSense, LCD, analog, or digital

More Information

Cypress provides a wealth of data at www.cypress.com to help you to select the right module for your design, and to help you to quickly and effectively integrate the module into your design.

- Overview: EZ-BLE Module Portfolio, Module Roadmap
- EZ-BLE PSoC Product Overview
- PSoC 4 BLE Silicon Datasheet
- Application notes: Cypress offers a number of BLE application notes covering a broad range of topics, from basic to advanced level. Recommended application notes for getting started with EZ-BLE modules are:
  - AN96841 - Getting Started with EZ-BLE Module
  - AN94020 - Getting Started with PSoC® 4 BLE
  - AN97060 - PSoC® 4 BLE and PRoC™ BLE - Over-The-Air (OTA) Device Firmware Upgrade (DFU) Guide
  - AN91162 - Creating a BLE Custom Profile
  - AN91184 - PSoC 4 BLE - Designing BLE Applications
  - AN92584 - Designing for Low Power and Estimating Battery Life for BLE Applications
  - AN85951 - PSoC® 4 CapSense® Design Guide
  - AN95089 - PSoC® 4/PRoC™ BLE Crystal Oscillator Selection and Tuning Techniques
  - AN91445 - Antenna Design and RF Layout Guidelines
- Knowledge Base Articles
  - KBA97095 - EZ-BLE™ Module Placement
  - KBA213976 - FAQ for BLE and Regulatory Certifications with EZ-BLE modules
  - KBA210802 - Queries on BLE Qualification and Declaration Processes
- Technical Reference Manual (TRM):
  - PSoC® 4 BLE Technical Reference Manual
  - PSOC(R) 4 BLE Registers Technical Reference Manual (TRM)
- Development Kits:
  - CYBLE-214015-EVAL, CYBLE-214015-01 Evaluation Board
  - CY8CKIT-042-BLE, Bluetooth® Low Energy (BLE) Pioneer Kit
  - CY8CKIT-002, PSoC® MiniProg3 Program and Debug Kit
- Test and Debug Tools:
  - CYSmart, Bluetooth® LE Test and Debug Tool (Windows)
  - CYSmart Mobile, Bluetooth® LE Test and Debug Tool (Android/iOS Mobile App)

PSoC® Creator™ Integrated Design Environment (IDE)

PSoC Creator is an Integrated Design Environment (IDE) that enables concurrent hardware and firmware editing, compiling and debugging of PSoC 3, PSoC 4, PSoC 5LP, PSoC 4 BLE, PRoC BLE and EZ-BLE module systems with no code size limitations. PSoC peripherals are designed using schematic capture and simple graphical user interface (GUI) with over 120 pre-verified, production-ready PSoC Components™.

PSoC Components are analog and digital “virtual chips,” represented by an icon that users can drag-and-drop into a design and configure to suit a broad array of application requirements.

Bluetooth Low Energy Component

The Bluetooth Low Energy Component inside PSoC Creator provides a comprehensive GUI-based configuration window that lets you quickly design BLE applications. The Component incorporates a Bluetooth Core Specification v4.2 compliant BLE protocol stack and provides API functions to enable user applications to interface with the underlying Bluetooth Low Energy Sub-System (BLESS) hardware via the stack.

Technical Support

- Frequently Asked Questions (FAQs): Learn more about our BLE ECO System.
- Forum: See if your question is already answered by fellow developers on the PSoC 4 BLE and PRoC BLE forums.
- Visit our support page and create a technical support case or contact a local sales representatives. If you are in the United States, you can talk to our technical support team by calling our toll-free number: +1-800-541-4736. Select option 2 at the prompt.

Contents

Overview **4**
Module Description 4
Pad Connection Interface **6**
Recommended Host PCB Layout **7**
Power Supply Connections and Recommended External Components **11**
Connection Options 11
External Component Recommendation 11
Critical Components List 14
Antenna Design 14
Electrical Specification **15**
GPIO 17
XRES 18
Analog Peripherals 18
Digital Peripherals 22
Serial Communication 24
Memory 25
System Resources 25
Environmental Specifications **31**
Environmental Compliance 31
RF Certification 31
Environmental Conditions 31
ESD and EMI Protection 31
Regulatory Information **32**
FCC 32
Industry Canada (IC) Certification 33
European R&TTE Declaration of Conformity 33
MIC Japan 34
KC Korea 34
Packaging **35**
Ordering Information **37**
Part Numbering Convention 37
Acronyms **38**
Document Conventions **40**
Units of Measure 40
Document History Page **41**
Sales, Solutions, and Legal Information **42**
Worldwide Sales and Design Support 42
Products 42
PSoC® Solutions 42
Cypress Developer Community 42
Technical Support 42

Overview

Module Description

The CYBLE-214015-01 module is a complete module designed to be soldered to the main host board.

Module Dimensions and Drawing

Cypress reserves the right to select components (including the appropriate BLE device) from various vendors to achieve the BLE module functionality. Such selections will guarantee that all height restrictions of the component area are maintained. Designs should be completed with the physical dimensions shown in the mechanical drawings in Figure 1. All dimensions are in millimeters (mm).

Table 1. Module Design Dimensions

Dimension Item		Specification
Module dimensions	Length (X)	11.00 ± 0.15 mm
	Width (Y)	11.00 ± 0.15 mm
Antenna location dimensions	Length (X)	11.00 ± 0.15 mm
	Width (Y)	4.62 ± 0.15 mm
PCB thickness	Height (H)	0.80 ± 0.10 mm
Shield height	Height (H)	1.00 ± 0.10 mm
Maximum component height	Height (H)	1.00 mm typical (shield)
Total module thickness (bottom of module to highest component)	Height (H)	1.80 mm typical

See Figure 1 on page 5 for the mechanical reference drawing for CYBLE-214015-01.

Figure 1. Module Mechanical Drawing

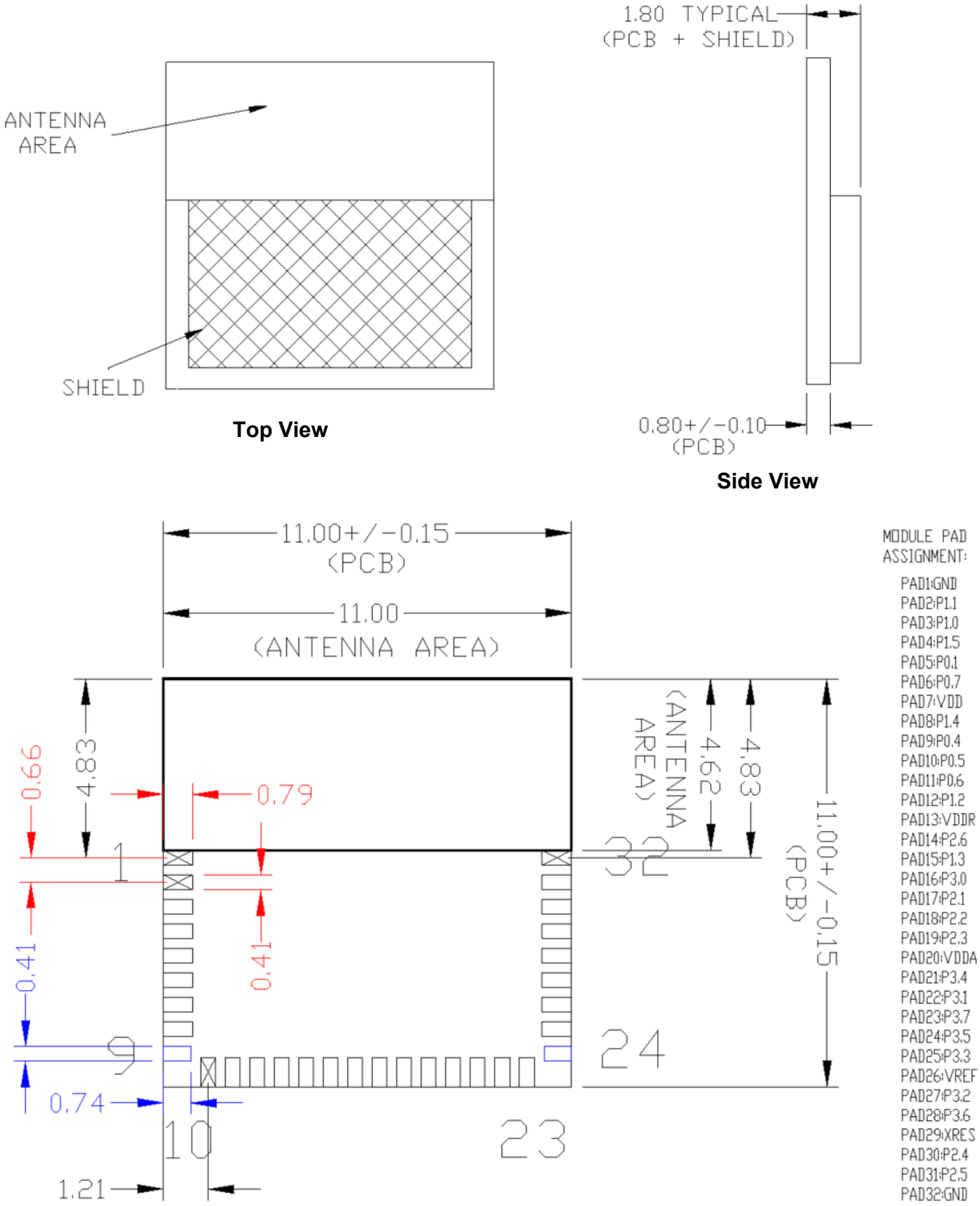

Note

1. No metal should be located beneath or above the antenna area. Only bare PCB material should be located beneath the antenna area. For more information on recommended host PCB layout, see Figure 3 on page 6, Figure 4 and Figure 5 on page 7, and Figure 6 and Table 3 on page 8.

Pad Connection Interface

As shown in the bottom view of Figure 1 on page 5, the CYBLE-214015-01 connects to the host board via solder pads on the back of the module. Table 2 and Figure 2 detail the solder pad length, width, and pitch dimensions of the CYBLE-214015-01 module.

Table 2. Solder Pad Connection Description

Name	Connections	Connection Type	Pad Length Dimension	Pad Width Dimension	Pad Pitch
SP	32	Solder Pads	Pad9/Pad24: 0.74 mm All Others: 0.79 mm	0.41 mm	0.66 mm

Figure 2. Solder Pad Dimensions (Seen from Bottom)

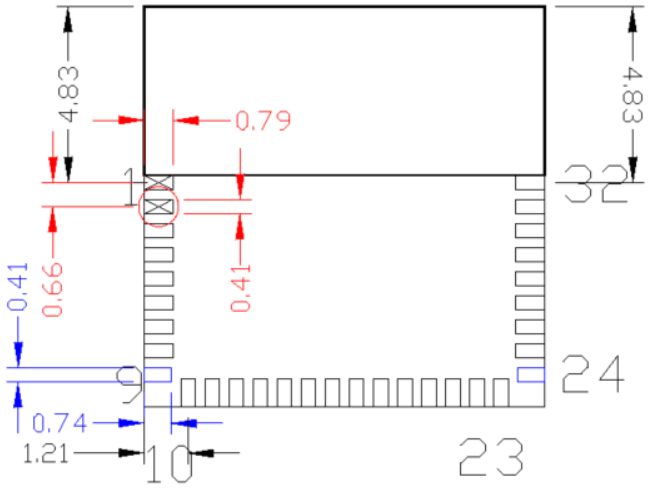

To maximize RF performance, the host layout should follow these recommendations:

1. The ideal placement of the Cypress BLE module is in a corner of the host board with the antenna located on the edge of the host board. This placement minimizes the additional recommended keep-out area stated in item 2. Please refer to AN96841 for module placement best practices.
2. To maximize RF performance, the area immediately around the Cypress BLE module trace antenna should contain an additional keep-out area, where no grounding or signal traces are contained. The keep-out area applies to all layers of the host board. The recommended dimensions of the host PCB keep-out area are shown in Figure 3 (dimensions are in mm).

Figure 3. Recommended Host PCB Keep-Out Area Around the CYBLE-214015-01 Trace Antenna

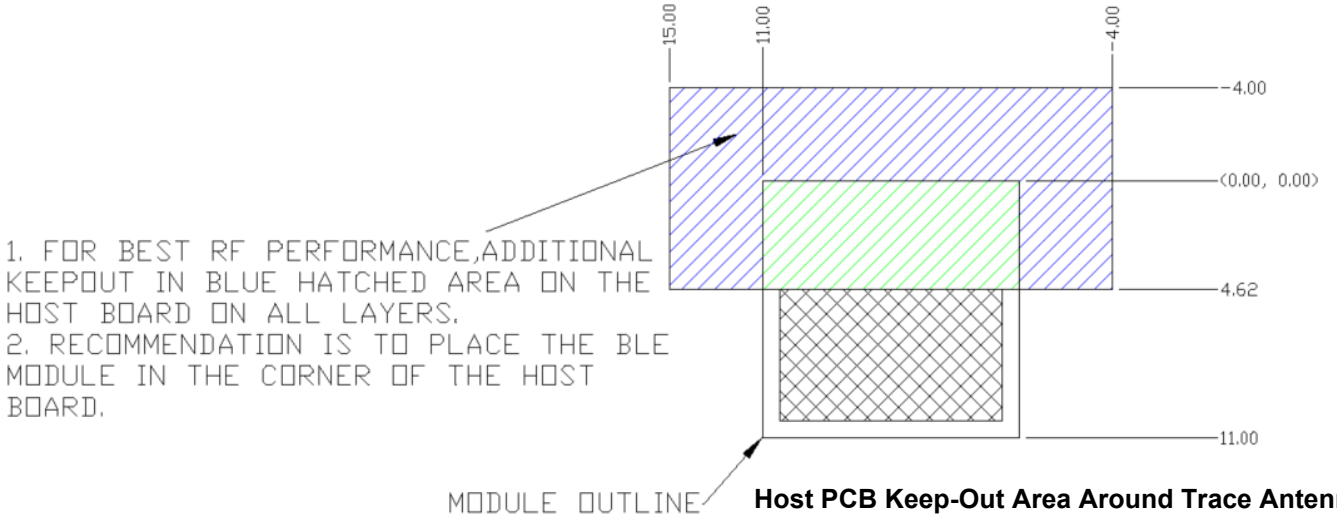

Host PCB Keep-Out Area Around Trace Antenna

Recommended Host PCB Layout

Figure 4 through Figure 6 and Table 3 provide details that can be used for the recommended host PCB layout pattern for the CYBLE-214015-01. Dimensions are in millimeters unless otherwise noted. Pad length of 0.99 mm (0.494 mm from center of the pad on either side) shown in Figure 6 is the minimum recommended host pad length. The host PCB layout pattern can be completed using either Figure 4, Figure 5, or Figure 6. It is not necessary to use all figures to complete the host PCB layout pattern.

Figure 4. Host Layout Pattern for CYBLE-214015-01

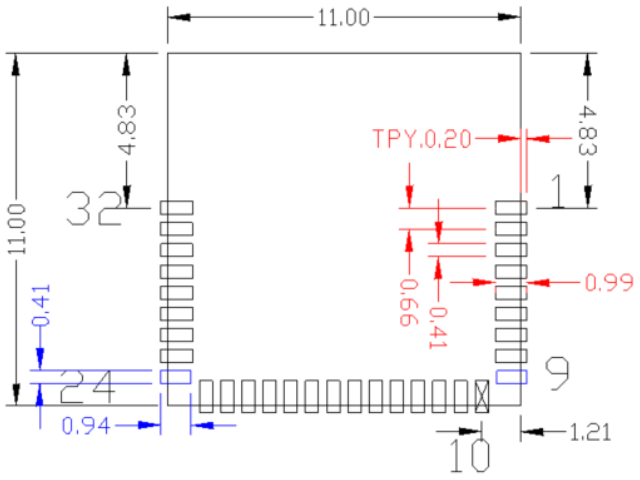

Figure 5. Module Pad Location from Origin

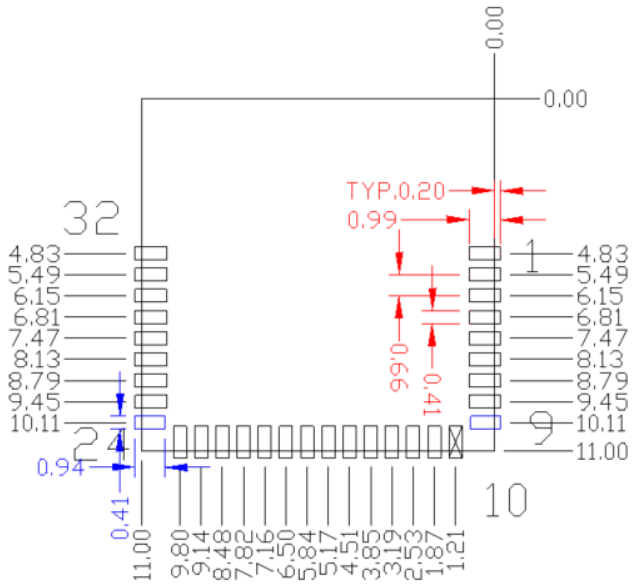

Table 3 provides the center location for each solder pad on the CYBLE-214015-01. All dimensions reference the to the center of the solder pad. Refer to Figure 6 for the location of each module solder pad.

Table 3. Module Solder Pad Location

Solder Pad (Center of Pad)	Location (X,Y) from Orign (mm)	Dimension from Orign (mils)
1	(0.30, 4.83)	(11.81, 190.16)
2	(0.30, 5.49)	(11.81, 216.14)
3	(0.30, 6.15)	(11.81, 242.13)
4	(0.30, 6.81)	(11.81, 268.11)
5	(0.30, 7.47)	(11.81, 294.09)
6	(0.30, 8.13)	(11.81, 320.08)
7	(0.30, 8.79)	(11.81, 346.06)
8	(0.30, 9.45)	(11.81, 372.05)
9	(0.27, 10.11)	(10.63, 398.03)
10	(1.21, 10.70)	(47.64, 421.26)
11	(1.87, 10.70)	(73.62, 421.26)
12	(2.53, 10.70)	(99.61, 421.26)
13	(3.19, 10.70)	(125.59, 421.26)
14	(3.85, 10.70)	(151.57, 421.26)
15	(4.51, 10.70)	(177.56, 421.26)
16	(5.17, 10.70)	(203.54, 421.26)
17	(5.84, 10.70)	(229.92, 421.26)
18	(6.50, 10.70)	(255.91, 421.26)
19	(7.16, 10.70)	(281.89, 421.26)
20	(7.82, 10.70)	(307.87, 421.26)
21	(8.48, 10.70)	(333.86, 421.26)
22	(9.14, 10.70)	(359.84, 421.26)
23	(9.80, 10.70)	(385.83, 421.26)
24	(10.73, 10.11)	(422.44, 398.03)
25	(10.70, 9.45)	(421.26, 372.05)
26	(10.70, 8.79)	(421.26, 346.06)
27	(10.70, 8.13)	(421.26, 320.08)
28	(10.70, 7.47)	(421.26, 294.09)
29	(10.70, 6.81)	(421.26, 268.11)
30	(10.70, 6.15)	(421.26, 242.13)
31	(10.70, 5.49)	(421.26, 216.14)
32	(10.70, 4.83)	(421.26, 190.16)

Figure 6. Solder Pad Reference Location

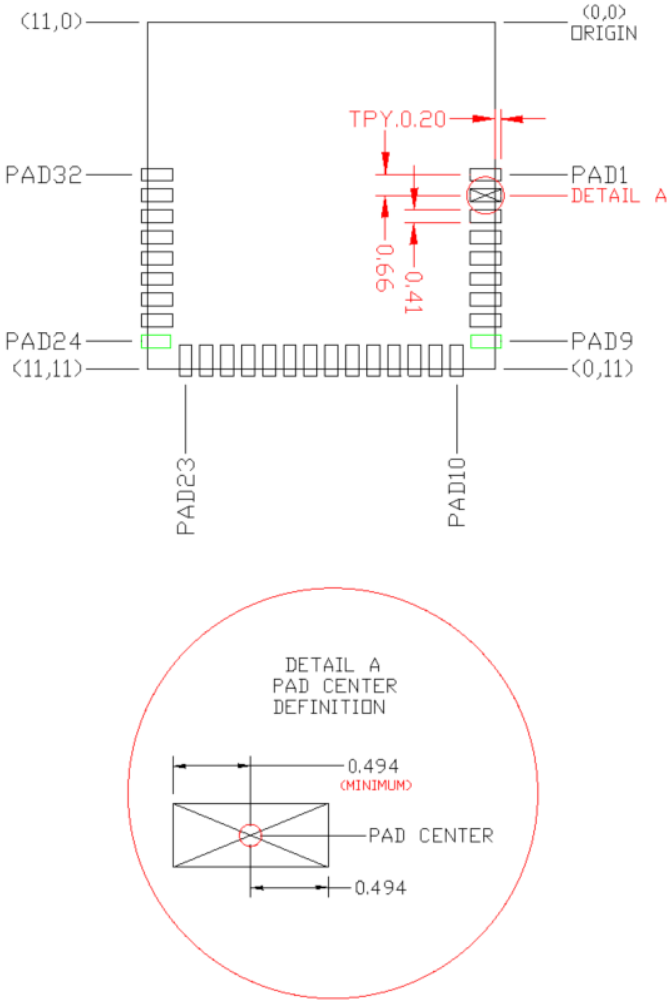

Table 4 and Table 5 detail the solder pad connection definitions and available functions for each connection pad. Table 4 lists the solder pads on CYBLE-214015-01, the BLE device port-pin, and denotes whether the digital function shown is available for each solder pad. Table 5 denotes whether the analog function shown is available for each solder pad. Each connection is configurable for a single option shown with a ✓.

Table 4. Digital Peripheral Capabilities

Pad Number	Device Port Pin	UART	SPI	I²C	TCPWM[2]	Cap Sense	WCO Out	ECO OUT	LCD	SWD	GPIO
1	GND[3]	Ground Connection									
2	P1.1		✓(SCB1_SS1)		✓(TCPWM0_N)	✓			✓		✓
3	P1.0				✓(TCPWM0_P)	✓			✓		✓
4	P1.5	✓(SCB0_TX)	✓(SCB0_MISO)	✓(SCB0_SCL)	✓(TCPWM2_N)	✓			✓		✓
5	P0.1	✓(SCB1_TX)	✓(SCB1_MISO)	✓(SCB1_SCL)	✓(TCPWM0_N)	✓			✓		✓
6	P0.7	✓(SCB0_CTS)	✓(SCB0_SCLK)		✓(TCPWM2_N)	✓			✓	✓ (SWDCLK)	✓
7	VDD	Digital Power Supply Input (1.71 to 5.5V)									
8	P1.4	✓(SCB0_RX)	✓(SCB0_MOSI)	✓(SCB0_SDA)	✓(TCPWM2_P)	✓			✓		✓
9	P0.4	✓(SCB0_RX)	✓(SCB0_MOSI)	✓(SCB0_SDA)	✓(TCPWM1_P)	✓		✓	✓		✓
10	P0.5	✓(SCB0_TX)	✓(SCB0_MISO)	✓(SCB0_SCL)	✓(TCPWM1_N)	✓			✓		✓
11	P0.6	✓(SCB0_RTS)	✓(SCB0_SS0)		✓(TCPWM2_P)	✓			✓	✓ (SWDIO)	✓
12	P1.2		✓(SCB1_SS2)		✓(TCPWM1_P)	✓			✓		✓
13	V_{DDR}	Radio Power Supply (1.9V to 5.5V)									
14	P2.6					✓			✓		✓
15	P1.3		✓(SCB1_SS3)		✓(TCPWM1_N)	✓			✓		✓
16	P3.0	✓(SCB0_RX)		✓(SCB0_SDA)	✓(TCPWM0_P)	✓			✓		✓
17	P2.1		✓(SCB0_SS2)			✓			✓		✓
18	P2.2		✓(SCB0_SS3)			✓			✓		✓
19	P2.3					✓	✓		✓		✓
20	VDDA	Analog Power Supply Input (1.71 to 5.5V)									
21	P3.4	✓(SCB1_RX)		✓(SCB1_SDA)	✓(TCPWM2_P)	✓			✓		✓
22	P3.1	✓(SCB0_TX)		✓(SCB0_SCL)	✓(TCPWM0_N)	✓			✓		✓
23	P3.7	✓(SCB1_CTS)			✓(TCPWM3_N)	✓	✓		✓		✓
24	P3.5	✓(SCB1_TX)		✓(SCB1_SCL)	✓(TCPWM2_N)	✓			✓		✓
25	P3.3	✓(SCB0_CTS)			✓(TCPWM1_N)	✓			✓		✓
26	VREF	Reference Voltage Input									
27	P3.2	✓(SCB0_RTS)			✓(TCPWM1_P)	✓			✓		✓
28	P3.6	✓(SCB1_RTS)			✓(TCPWM3_P)	✓			✓		✓
29	XRES	External Reset Hardware Connection Input									
30	P2.4					✓			✓		✓
31	P2.5					✓			✓		✓
32	GND[3]	Ground Connection									

Notes
2. TCPWM stands for timer, counter, and PWM. If supported, the pad can be configured to any of these peripheral functions.
3. The main board needs to connect both GND connections (Pad 1 and Pad 32) on the module to the common ground of the system.

Table 5. Analog Peripheral Capabilities

Pad Number	Device Port Pin	SARMUX	OPAMP	LPCOMP
1	GND[3]	Ground Connection		
2	P1.1		✓(CTBm1_OA0_INN)	
3	P1.0		✓(CTBm1_OA0_INP)	
4	P1.5		✓(CTBm1_OA1_INP)	
5	P0.1			
6	P0.7			
7	VDD	Digital Power Supply Input (1.71 to 5.5V)		
8	P1.4		✓(CTBm1_OA1_INN)	
9	P0.4			✓(COMP1_INP)
10	P0.5			✓(COMP1_INN)
11	P0.6			
12	P1.2		✓(CTBm1_OA0_OUT)	
13	V_{DDR}	Radio Power Supply (1.9V to 5.5V)		
14	P2.6		✓(CTBm1_OA0_INP)	
15	P1.3		✓(CTBm1_OA1_OUT)	
16	P3.0	✓		
17	P2.1		✓(CTBm1_OA0_INN)	
18	P2.2		✓(CTBm1_OA0_OUT)	
19	P2.3		✓(CTBm1_OA1_OUT)	
20	VDDA	Analog Power Supply Input (1.71 to 5.5V)		
21	P3.4	✓		
22	P3.1	✓		
23	P3.7	✓		
24	P3.5	✓		
25	P3.3	✓		
26	VREF	Reference Voltage Input (Optional)		
27	P3.2	✓		
28	P3.6	✓		
29	XRES	External Reset Hardware Connection Input		
30	P2.4		✓(CTBm1_OA1_INN)	
31	P2.5		✓(CTBm1_OA1_INP)	
32	GND	Ground Connection		

Power Supply Connections and Recommended External Components

Power Connections

The CYBLE-214015-01 contains three power supply connections, VDD, VDDA, and VDDR. The VDD and VDDA connections supply power for the digital and analog device operation respectively. VDDR supplies power for the device radio.

VDD and VDDA accept a supply range of 1.71 V to 5.5 V. VDDR accepts a supply range of 1.9 V to 5.5 V. These specifications can be found in Table 10. The maximum power supply ripple for both power connections on the module is 100 mV, as shown in Table 8.

The power supply ramp rate of VDD and VDDA must be equal to or greater than that of VDDR when the radio is used.

Connection Options

Two connection options are available for any application:

1. Single supply: Connect VDD, VDDA, and VDDR to the same supply.
2. Independent supply: Power VDD, VDDA, and VDDR separately.

External Component Recommendation

In either connection scenario, it is recommended to place an external ferrite bead between the supply and the module connection. The ferrite bead should be positioned as close as possible to the module pin connection.

Figure 7 details the recommended host schematic options for a single supply scenario. The use of one or two ferrite beads will depend on the specific application and configuration of the CYBLE-214015-01.

Figure 8 details the recommended host schematic for an independent supply scenario.

The recommended ferrite bead value is 330 Ω, 100 MHz (Murata BLM21PG331SN1D).

Figure 7. Recommended Host Schematic Options for Single Supply Option

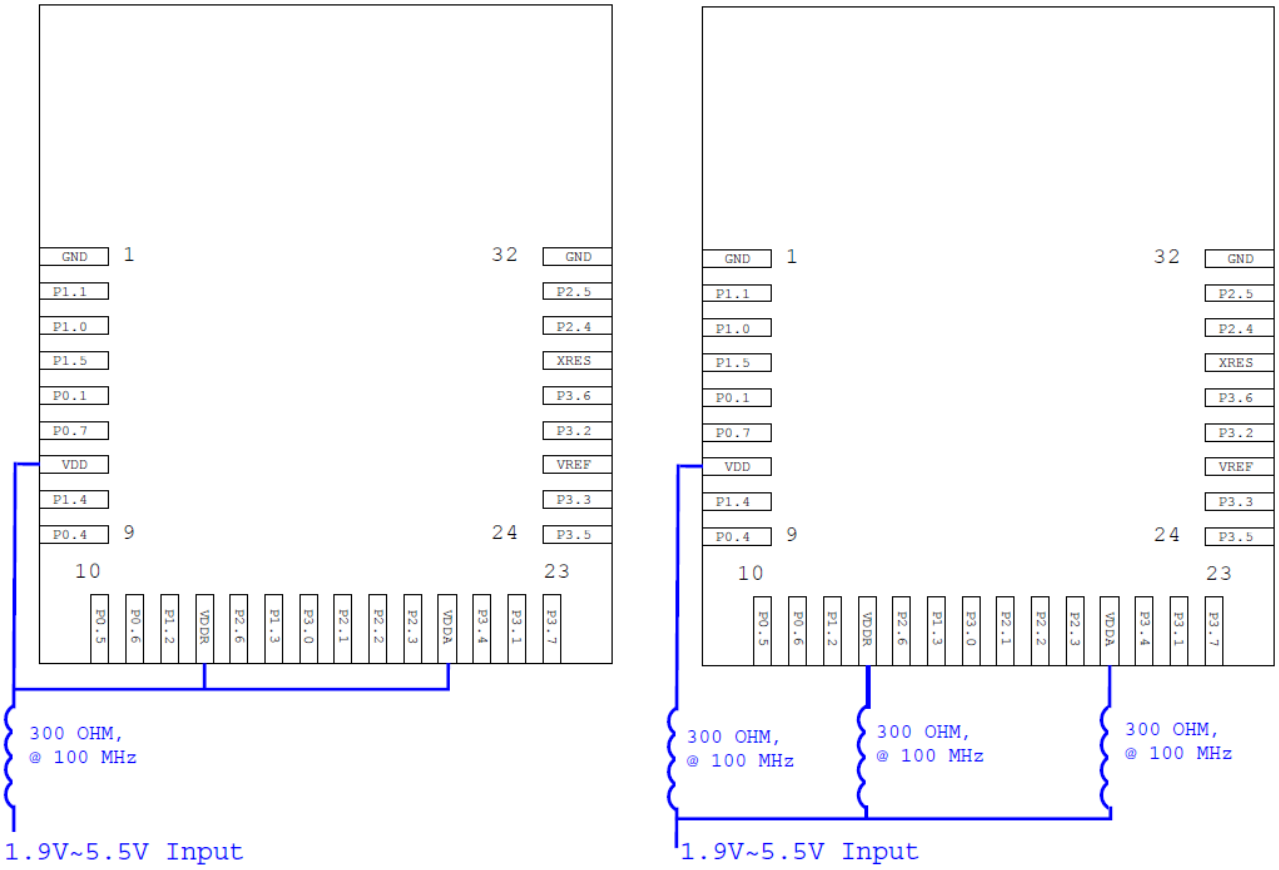

Single Ferrite Bead Option

Three Ferrite Bead Option

Figure 8. Recommended Host Schematic for Independent Supply Option

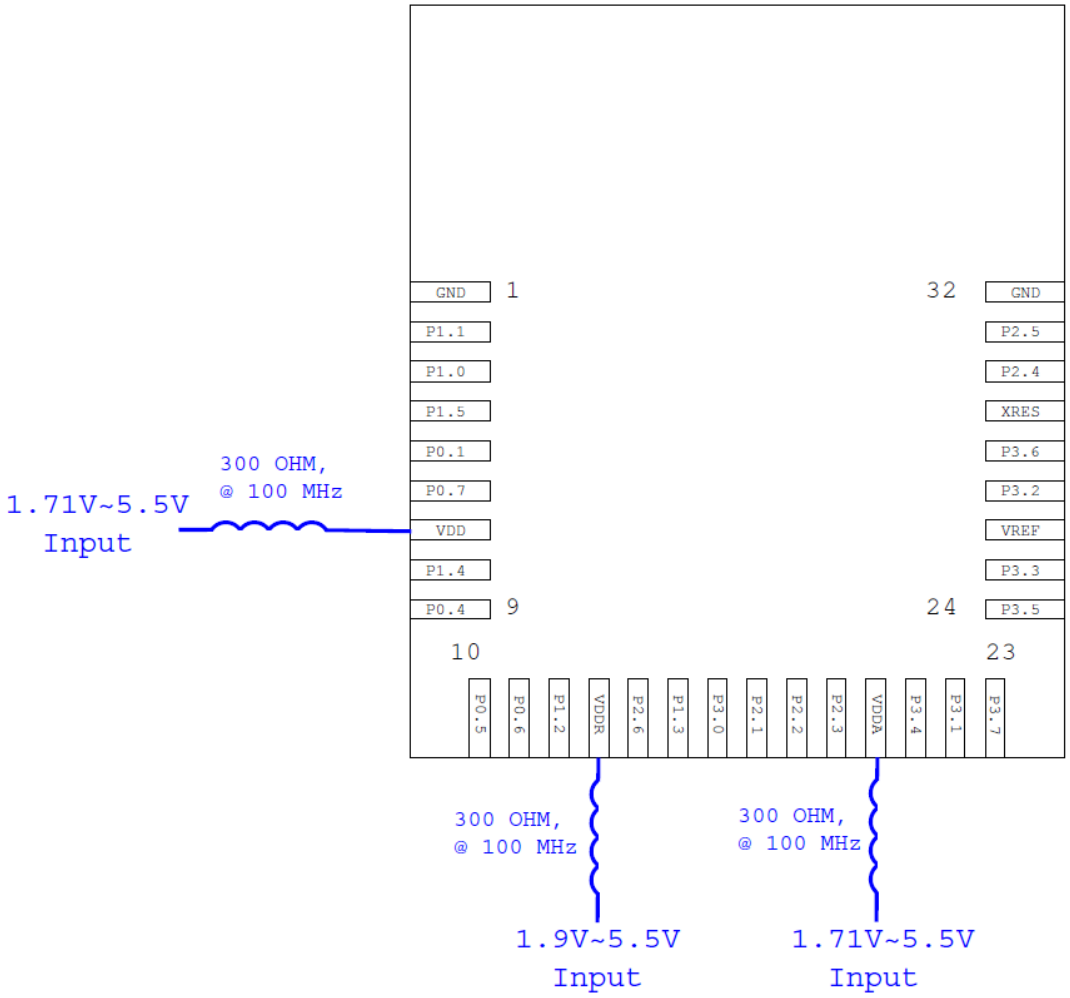

The CYBLE-214015-01 schematic is shown in Figure 9.

Figure 9. CYBLE-214015-01 Schematic Diagram

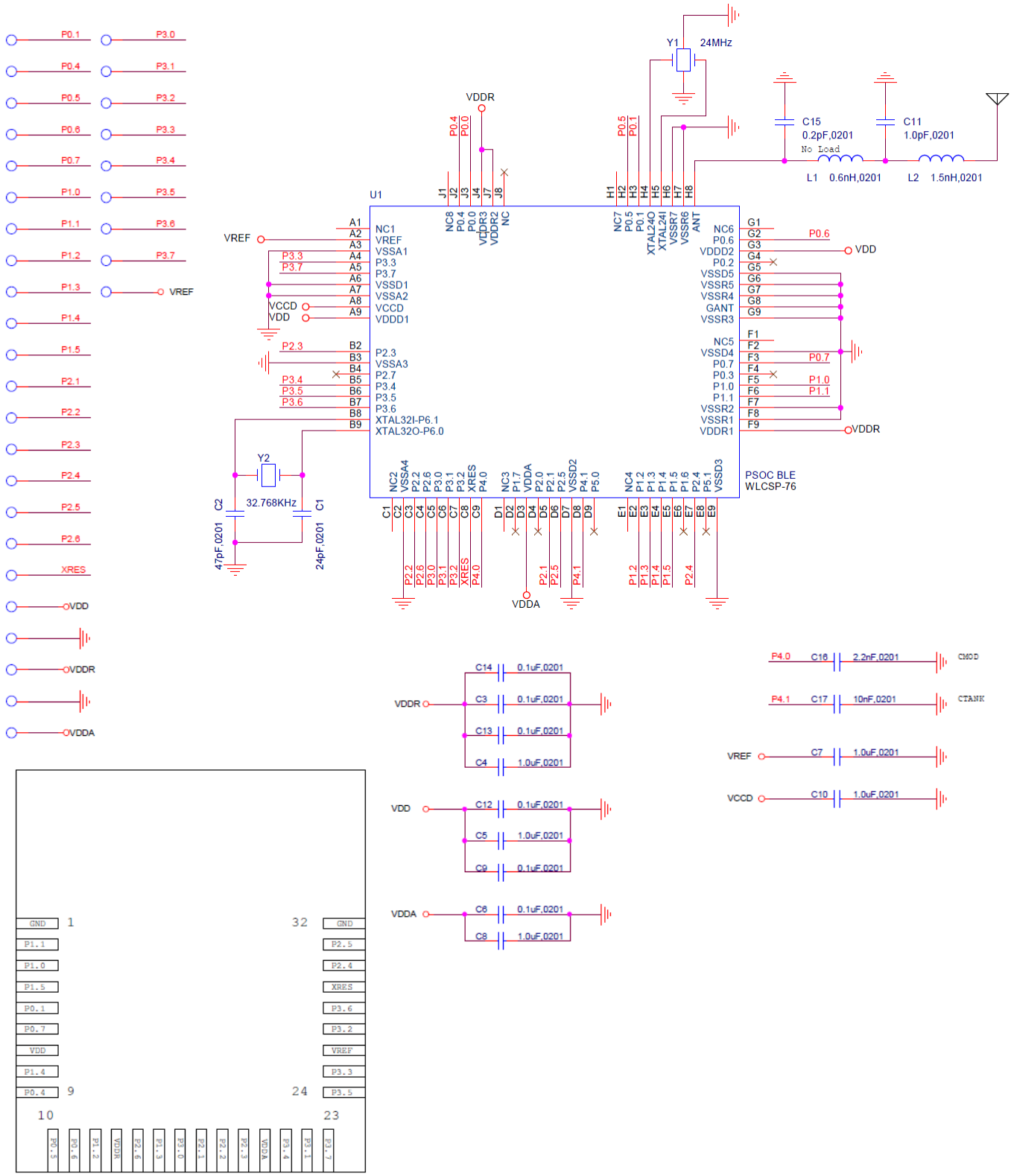

Critical Components List

Table 6 details the critical components used in the CYBLE-214015-01 module.

Table 6. Critical Component List

Component	Reference Designator	Description
Silicon	U1	76-pin WLCSP Programmable System-on-Chip (PSoC) with BLE
Crystal	Y1	24.000 MHz, 10PF
Crystal	Y2	32.768 kHz, 12.5PF

Antenna Design

Table 7 details antenna used on the CYBLE-214015-01 module. The Cypress module performance improves many of these characteristics. For more information, see Table 9 on page 15.

Table 7. Trace Antenna Specifications

Item	Description
Frequency Range	2400 – 2500 MHz
Peak Gain	-0.5 dBi typical
Average Gain	-0.5 dBi typical
Return Loss	10 dB minimum

Electrical Specification

Table 8 details the absolute maximum electrical characteristics for the Cypress BLE module.

Table 8. CYBLE-214015-01 Absolute Maximum Ratings

Parameter	Description	Min	Typ	Max	Unit	Details/Conditions
V_{DDD_ABS}	V_{DD}, V_{DDA} or V_{DDR} supply relative to V_{SS} (V_{SSD} = V_{SSA})	–0.5	–	6	V	Absolute maximum
V_{CCD_ABS}	Direct digital core voltage input relative to V_{SSD}	–0.5	–	1.95	V	Absolute maximum
V_{DDD_RIPPLE}	Maximum power supply ripple for V_{DD}, V_{DDA} and V_{DDR} input voltage	–	–	100	mV	3.0V supply Ripple frequency of 100 kHz to 750 kHz
V_{GPIO_ABS}	GPIO voltage	–0.5	–	V_{DD} +0.5	V	Absolute maximum
I_{GPIO_ABS}	Maximum current per GPIO	–25	–	25	mA	Absolute maximum
$I_{GPIO_injection}$	GPIO injection current: Maximum for $V_{IH} > V_{DD}$ and minimum for $V_{IL} < V_{SS}$	–0.5	–	0.5	mA	Absolute maximum current injected per pin
LU	Pin current for latch up	–200		200	mA	–

Table 9 details the RF characteristics for the Cypress BLE module.

Table 9. CYBLE-214015-01 RF Performance Characteristics

Parameter	Description	Min	Typ	Max	Unit	Details/Conditions
RF_O	RF output power on ANT	–18	0	3	dBm	Configurable via register settings
RX_S	RF receive sensitivity on ANT	–	–87	–	dBm	Guaranteed by design simulation
F_R	Module frequency range	2400	–	2480	MHz	–
G_P	Peak gain	–	-0.5	–	dBi	–
G_{Avg}	Average gain	–	–0.5	–	dBi	–
RL	Return loss	–	–10	–	dB	–

Table 10 through Table 51 list the module level electrical characteristics for the CYBLE-214015-01. All specifications are valid for –40 °C ≤ TA ≤ 85 °C and TJ ≤ 100 °C, except where noted. Specifications are valid for 1.71V to 5.5V, except where noted.

Table 10. CYBLE-214015-01 DC Specifications

Parameter	Description	Min	Typ	Max	Unit	Details/Conditions
V_{DD1}	Power supply input voltage (V_{DD} = V_{DDA} = V_{DDR})	1.71	–	5.5	V	With regulator enabled
V_{DD2}	Power supply input voltage unregulated (V_{DD} = V_{DDA} = V_{DDR})	1.71	1.8	1.89	V	Internally unregulated supply
V_{DDR1}	Radio supply voltage (radio on)	1.9	–	5.5	V	–
V_{DDR2}	Radio supply voltage (radio off)	1.71	–	5.5	V	–
Active Mode, V_{DD} = 1.71V to 5.5V						
I_{DD3}	Execute from flash; CPU at 3 MHz	–	1.7	–	mA	T = 25 °C, V_{DD} = 3.3V
I_{DD4}	Execute from flash; CPU at 3 MHz	–	–	–	mA	T = –40 °C to 85 °C
I_{DD5}	Execute from flash; CPU at 6 MHz	–	2.5	–	mA	T = 25 °C, V_{DD} = 3.3V
I_{DD6}	Execute from flash; CPU at 6 MHz	–	–	–	mA	T = –40 °C to 85 °C
I_{DD7}	Execute from flash; CPU at 12 MHz	–	4	–	mA	T = 25 °C, V_{DD} = 3.3V

Table 10. CYBLE-214015-01 DC Specifications (continued)

Parameter	Description	Min	Typ	Max	Unit	Details/Conditions
I_{DD8}	Execute from flash; CPU at 12 MHz	–	–	–	mA	T = –40 °C to 85 °C
I_{DD9}	Execute from flash; CPU at 24 MHz	–	7.1	–	mA	T = 25 °C, V_{DD} = 3.3V
I_{DD10}	Execute from flash; CPU at 24 MHz	–	–	–	mA	T = –40 °C to 85 °C
I_{DD11}	Execute from flash; CPU at 48 MHz	–	13.4	–	mA	T = 25 °C, V_{DD} = 3.3V
I_{DD12}	Execute from flash; CPU at 48 MHz	–	–	–	mA	T = –40 °C to 85 °C
Sleep Mode, V_{DD} = 1.71 to 5.5V						
I_{DD13}	IMO on	–	–	–	mA	T = 25 °C, V_{DD} = 3.3V, SYSCLK = 3 MHz
Sleep Mode, V_{DD} and V_{DDR} = 1.9 to 5.5V						
I_{DD14}	ECO on	–	–	–	mA	T = 25 °C, V_{DD} = 3.3V, SYSCLK = 3 MHz
Deep-Sleep Mode, V_{DD} = 1.71 to 3.6V						
I_{DD15}	WDT with WCO on	–	1.3	–	µA	T = 25 °C, V_{DD} = 3.3V
I_{DD16}	WDT with WCO on	–	–	–	µA	T = –40 °C to 85 °C
I_{DD17}	WDT with WCO on	–	–	–	µA	T = 25 °C, V_{DD} = 5V
I_{DD18}	WDT with WCO on	–	–	–	µA	T = –40 °C to 85 °C
Deep-Sleep Mode, V_{DD} = 1.71 to 1.89V (Regulator Bypassed)						
I_{DD19}	WDT with WCO on	–	–	–	µA	T = 25 °C
I_{DD20}	WDT with WCO on	–	–	–	µA	T = –40 °C to 85 °C
Hibernate Mode, V_{DD} = 1.71 to 3.6V						
I_{DD27}	GPIO and reset active	–	150	–	nA	T = 25 °C, V_{DD} = 3.3V
I_{DD28}	GPIO and reset active	–	–	–	nA	T = –40 °C to 85 °C
Hibernate Mode, V_{DD} = 3.6 to 5.5V						
I_{DD29}	GPIO and reset active	–	–	–	nA	T = 25 °C, V_{DD} = 5V
I_{DD30}	GPIO and reset active	–	–	–	nA	T = –40 °C to 85 °C
Stop Mode, V_{DD} = 1.71 to 3.6V						
I_{DD33}	Stop-mode current (V_{DD})	–	20	–	nA	T = 25 °C, V_{DD} = 3.3V
I_{DD34}	Stop-mode current (V_{DDR})	–	40	–-	nA	T = 25 °C, V_{DDR} = 3.3V
I_{DD35}	Stop-mode current (V_{DD})	–	–	–	nA	T = –40 °C to 85 °C
I_{DD36}	Stop-mode current (V_{DDR})	–	–	–	nA	T = –40 °C to 85 °C, V_{DDR} = 1.9 V to 3.6V
Stop Mode, V_{DD} = 3.6 to 5.5V						
I_{DD37}	Stop-mode current (V_{DD})	–	–	–	nA	T = 25 °C, V_{DD} = 5V
I_{DD38}	Stop-mode current (V_{DDR})	–	–	–	nA	T = 25 °C, V_{DDR} = 5V
I_{DD39}	Stop-mode current (V_{DD})	–	–	–	nA	T = –40 °C to 85 °C
I_{DD40}	Stop-mode current (V_{DDR})	–	–	–	nA	T = –40 °C to 85 °C

Table 11. AC Specifications

Parameter	Description	Min	Typ	Max	Unit	Details/Conditions
F_{CPU}	CPU frequency	DC	–	48	MHz	$1.71V \le V_{DD} \le 5.5V$
T_{SLEEP}	Wakeup from Sleep mode	–	0	–	µs	Guaranteed by characterization
$T_{DEEPSLEEP}$	Wakeup from Deep-Sleep mode	–	–	25	µs	24-MHz IMO. Guaranteed by characterization
$T_{HIBERNATE}$	Wakeup from Hibernate mode	–	–	800	µs	Guaranteed by characterization
T_{STOP}	Wakeup from Stop mode	–	–	2	ms	XRES wakeup

GPIO

Table 12. GPIO DC Specifications

Parameter	Description	Min	Typ	Max	Unit	Details/Conditions
V_{IH}[4]	Input voltage HIGH threshold	$0.7 \times V_{DD}$	–	–	V	CMOS input
	LVTTL input, $V_{DD} < 2.7V$	$0.7 \times V_{DD}$	–	–	V	–
	LVTTL input, $V_{DD} \ge 2.7V$	2.0	–	–	V	–
V_{IL}	Input voltage LOW threshold	–	–	$0.3 \times V_{DD}$	V	CMOS input
	LVTTL input, $V_{DD} < 2.7V$	–	–	$0.3 \times V_{DD}$	V	–
	LVTTL input, $V_{DD} \ge 2.7V$	–	–	0.8	V	–
V_{OH}	Output voltage HIGH level	$V_{DD} - 0.6$	–	–	V	I_{OH} = 4 mA at 3.3-V V_{DD}
	Output voltage HIGH level	$V_{DD} - 0.5$	–	–	V	I_{OH} = 1 mA at 1.8-V V_{DD}
V_{OL}	Output voltage LOW level	–	–	0.6	V	I_{OL} = 8 mA at 3.3-V V_{DD}
	Output voltage LOW level	–	–	0.6	V	I_{OL} = 4 mA at 1.8-V V_{DD}
	Output voltage LOW level	–	–	0.4	V	I_{OL} = 3 mA at 3.3-V V_{DD}
R_{PULLUP}	Pull-up resistor	3.5	5.6	8.5	kΩ	–
$R_{PULLDOWN}$	Pull-down resistor	3.5	5.6	8.5	kΩ	–
I_{IL}	Input leakage current (absolute value)	–	–	2	nA	25 °C, V_{DD} = 3.3V
I_{IL_CTBM}	Input leakage on CTBm input pins	–	–	4	nA	–
C_{IN}	Input capacitance	–	–	7	pF	–
V_{HYSTTL}	Input hysteresis LVTTL	25	40	–	mV	$V_{DD} > 2.7V$
$V_{HYSCMOS}$	Input hysteresis CMOS	$0.05 \times V_{DD}$	–	–	1	–
I_{DIODE}	Current through protection diode to V_{DD}/V_{SS}	–	–	100	µA	–
I_{TOT_GPIO}	Maximum total source or sink chip current	–	–	200	mA	–

Note
4. V_{IH} must not exceed V_{DD} + 0.2 V.

Table 13. GPIO AC Specifications

Parameter	Description	Min	Typ	Max	Unit	Details/Conditions
T_{RISEF}	Rise time in Fast-Strong mode	2	–	12	ns	3.3-V V_{DDD}, C_{LOAD} = 25 pF
T_{FALLF}	Fall time in Fast-Strong mode	2	–	12	ns	3.3-V V_{DDD}, C_{LOAD} = 25 pF
T_{RISES}	Rise time in Slow-Strong mode	10	–	60	ns	3.3-V V_{DDD}, C_{LOAD} = 25 pF
T_{FALLS}	Fall time in Slow-Strong mode	10	–	60	ns	3.3-V V_{DDD}, C_{LOAD} = 25 pF
$F_{GPIOUT1}$	GPIO Fout; 3.3V ≤ V_{DD} ≤ 5.5V Fast-Strong mode	–	–	33	MHz	90/10%, 25 pF load, 60/40 duty cycle
$F_{GPIOUT2}$	GPIO Fout; 1.7V≤ V_{DD} ≤ 3.3V Fast-Strong mode	–	–	16.7	MHz	90/10%, 25 pF load, 60/40 duty cycle
$F_{GPIOUT3}$	GPIO Fout; 3.3V ≤ V_{DD} ≤ 5.5V Slow-Strong mode	–	–	7	MHz	90/10%, 25 pF load, 60/40 duty cycle
$F_{GPIOUT4}$	GPIO Fout; 1.7V ≤ V_{DD} ≤ 3.3V Slow-Strong mode	–	–	3.5	MHz	90/10%, 25 pF load, 60/40 duty cycle
F_{GPIOIN}	GPIO input operating frequency 1.71V ≤ V_{DD} ≤ 5.5V	–	–	48	MHz	90/10% V_{IO}

XRES

Table 14. XRES DC Specifications

Parameter	Description	Min	Typ	Max	Unit	Details/Conditions
V_{IH}	Input voltage HIGH threshold	0.7 × V_{DDD}	–	–	V	CMOS input
V_{IL}	Input voltage LOW threshold	–	–	0.3 × V_{DDD}	V	CMOS input
R_{PULLUP}	Pull-up resistor	3.5	5.6	8.5	kΩ	–
C_{IN}	Input capacitance	–	3	–	pF	–
$V_{HYSXRES}$	Input voltage hysteresis	–	100	–	mV	–
I_{DIODE}	Current through protection diode to V_{DD}/V_{SS}	–	–	100	µA	–

Table 15. XRES AC Specifications

Parameter	Description	Min	Typ	Max	Unit	Details/Conditions
$T_{RESETWIDTH}$	Reset pulse width	1	–	–	µs	–

Analog Peripherals

Opamp

Table 16. Opamp Specifications

Parameter	Description	Min	Typ	Max	Unit	Details/Conditions
I_{DD} (Opamp Block Current. V_{DD} = 1.8V. No Load)						
I_{DD_HI}	Power = high	–	1000	1300	µA	–
I_{DD_MED}	Power = medium	–	500	–	µA	–
I_{DD_LOW}	Power = low	–	250	350	µA	–
GBW (Load = 20 pF, 0.1 mA. V_{DDA} = 2.7V)						
GBW_HI	Power = high	6	–	–	MHz	–
GBW_MED	Power = medium	4	–	–	MHz	–
GBW_LO	Power = low	–	1	–	MHz	–
I_{OUT_MAX} (V_{DDA} ≥ 2.7V, 500 mV from Rail)						
$I_{OUT_MAX_HI}$	Power = high	10	–	–	mA	–

Table 16. Opamp Specifications (continued)

Parameter	Description	Min	Typ	Max	Unit	Details/Conditions
$I_{OUT_MAX_MID}$	Power = medium	10	–	–	mA	–
$I_{OUT_MAX_LO}$	Power = low	–	5	–	mA	–
I_{OUT} (V_{DDA} = 1.71V, 500 mV from Rail)						
$I_{OUT_MAX_HI}$	Power = high	4	–	–	mA	–
$I_{OUT_MAX_MID}$	Power = medium	4	–	–	mA	–
$I_{OUT_MAX_LO}$	Power = low	–	2	–	mA	–
V_{IN}	Charge pump on, $V_{DDA} \geq 2.7V$	–0.05	–	V_{DDA} – 0.2	V	–
V_{CM}	Charge pump on, $V_{DDA} \geq 2.7V$	–0.05	–	V_{DDA} – 0.2	V	–
V_{OUT} ($V_{DDA} \geq 2.7V$)						
V_{OUT_1}	Power = high, I_{LOAD} = 10 mA	0.5	–	V_{DDA} – 0.5	V	–
V_{OUT_2}	Power = high, I_{LOAD} = 1 mA	0.2	–	V_{DDA} – 0.2	V	–
V_{OUT_3}	Power = medium, I_{LOAD} = 1 mA	0.2	–	V_{DDA} – 0.2	V	–
V_{OUT_4}	Power = low, I_{LOAD} = 0.1 mA	0.2	–	V_{DDA} – 0.2	V	–
V_{OS_TR}	Offset voltage, trimmed	1	±0.5	1	mV	High mode
V_{OS_TR}	Offset voltage, trimmed	–	±1	–	mV	Medium mode
V_{OS_TR}	Offset voltage, trimmed	–	±2	–	mV	Low mode
$V_{OS_DR_TR}$	Offset voltage drift, trimmed	–10	±3	10	µV/C	High mode
$V_{OS_DR_TR}$	Offset voltage drift, trimmed	–	±10	–	µV/C	Medium mode
$V_{OS_DR_TR}$	Offset voltage drift, trimmed	–	±10	–	µV/C	Low mode
CMRR	DC	65	70	–	dB	V_{DDD} = 3.6V, High-power mode
PSRR	At 1 kHz, 100-mV ripple	70	85	–	dB	V_{DDD} = 3.6V
Noise						
V_{N1}	Input referred, 1 Hz–1 GHz, power = high	–	94	–	µVrms	–
V_{N2}	Input referred, 1 kHz, power = high	–	72	–	nV/rtHz	–
V_{N3}	Input referred, 10 kHz, power = high	–	28	–	nV/rtHz	–
V_{N4}	Input referred, 100 kHz, power = high	–	15	–	nV/rtHz	–
C_{LOAD}	Stable up to maximum load. Performance specs at 50 pF	–	–	125	pF	–
Slew_rate	Cload = 50 pF, Power = High, $V_{DDA} \geq 2.7V$	6	–	–	V/µsec	–
T_op_wake	From disable to enable, no external RC dominating	–	300	–	µsec	–
Comp_mode (Comparator Mode; 50-mV Drive, T_{RISE} = T_{FALL} (Approx.)						
T_{PD1}	Response time; power = high	–	150	–	ns	–
T_{PD2}	Response time; power = medium	–	400	–	ns	–
T_{PD3}	Response time; power = low	–	2000	–	ns	–
Vhyst_op	Hysteresis	–	10	–	mV	–
Deep-Sleep Mode (Deep-Sleep mode operation is only guaranteed for V_{DDA} > 2.5V)						
GBW_DS	Gain bandwidth product	–	50	–	kHz	–
IDD_DS	Current	–	15	–	µA	–
Vos_DS	Offset voltage	–	5	–	mV	–
Vos_dr_DS	Offset voltage drift	–	20	–	µV/°C	–
Vout_DS	Output voltage	0.2	–	V_{DD}–0.2	V	–

Table 16. Opamp Specifications (continued)

Parameter	Description	Min	Typ	Max	Unit	Details/Conditions
Vcm_DS	Common mode voltage	0.2	–	V_{DD} – 1.8	V	–

Table 17. Comparator DC Specifications

Parameter	Description	Min	Typ	Max	Unit	Details/Conditions
$V_{OFFSET1}$	Input offset voltage, Factory trim	–	–	±10	mV	–
$V_{OFFSET2}$	Input offset voltage, Custom trim	–	–	±6	mV	–
$V_{OFFSET3}$	Input offset voltage, ultra-low-power mode	–	±12	–	mV	–
V_{HYST}	Hysteresis when enabled	–	10	35	mV	–
V_{ICM1}	Input common mode voltage in normal mode	0	–	V_{DDD} – 0.1	V	Modes 1 and 2
V_{ICM2}	Input common mode voltage in low-power mode	0	–	V_{DDD}	V	–
V_{ICM3}	Input common mode voltage in ultra low-power mode	0	–	V_{DDD} – 1.15	V	–
CMRR	Common mode rejection ratio	50	–	–	dB	$V_{DDD} \geq 2.7V$
CMRR	Common mode rejection ratio	42	–	–	dB	$V_{DDD} \leq 2.7V$
I_{CMP1}	Block current, normal mode	–	–	400	µA	–
I_{CMP2}	Block current, low-power mode	–	–	100	µA	–
I_{CMP3}	Block current in ultra-low-power mode	–	6	–	µA	–
Z_{CMP}	DC input impedance of comparator	35	–	–	MΩ	–

Table 18. Comparator AC Specifications

Parameter	Description	Min	Typ	Max	Unit	Details/Conditions
T_{RESP1}	Response time, normal mode, 50-mV overdrive	–	38	–	ns	50-mV overdrive
T_{RESP2}	Response time, low-power mode, 50-mV overdrive	–	70	–	ns	50-mV overdrive
T_{RESP3}	Response time, ultra-low-power mode, 50-mV overdrive	–	2.3	–	µs	200-mV overdrive

Temperature Sensor

Table 19. Temperature Sensor Specifications

Parameter	Description	Min	Typ	Max	Unit	Details/Conditions
$T_{SENSACC}$	Temperature-sensor accuracy	–5	±1	5	°C	–40 to +85 °C

SAR ADC

Table 20. SAR ADC DC Specifications

Parameter	Description	Min	Typ	Max	Unit	Details/Conditions
A_RES	Resolution	–	–	12	bits	–
A_CHNIS_S	Number of channels - single-ended	–	–	8	–	8 full-speed
A-CHNKS_D	Number of channels - differential	–	–	4	–	Diff inputs use neighboring I/O
A-MONO	Monotonicity	–	–	–	–	Yes
A_GAINERR	Gain error	–	–	±0.1	%	With external reference

Table 20. SAR ADC DC Specifications (continued)

Parameter	Description	Min	Typ	Max	Unit	Details/Conditions
A_OFFSET	Input offset voltage	–	–	2	mV	Measured with 1-V V_{REF}
A_ISAR	Current consumption	–	–	1	mA	–
A_VINS	Input voltage range - single-ended	V_{SS}	–	V_{DDA}	V	–
A_VIND	Input voltage range - differential	V_{SS}	–	V_{DDA}	V	–
A_INRES	Input resistance	–	–	2.2	kΩ	–
A_INCAP	Input capacitance	–	–	10	pF	–
VREFSAR	Trimmed internal reference to SAR	–1	–	1	%	Percentage of Vbg (1.024 V)

Table 21. SAR ADC AC Specifications

Parameter	Description	Min	Typ	Max	Unit	Details/Conditions
A_PSRR	Power-supply rejection ratio	70	–	–	dB	Measured at 1-V reference
A_CMRR	Common-mode rejection ratio	66	–	–	dB	–
A_SAMP	Sample rate	–	–	1	Msps	–
Fsarintref	SAR operating speed without external ref. bypass	–	–	100	Ksps	12-bit resolution
A_SNR	Signal-to-noise ratio (SNR)	65	–	–	dB	F_{IN} = 10 kHz
A_BW	Input bandwidth without aliasing	–	–	A_SAMP/2	kHz	–
A_INL	Integral nonlinearity. V_{DD} = 1.71V to 5.5V, 1 Msps	–1.7	–	2	LSB	V_{REF} = 1V to V_{DD}
A_INL	Integral nonlinearity. V_{DDD} = 1.71V to 3.6V, 1 Msps	–1.5	–	1.7	LSB	V_{REF} = 1.71V to V_{DD}
A_INL	Integral nonlinearity. V_{DD} = 1.71V to 5.5V, 500 Ksps	–1.5	–	1.7	LSB	V_{REF} = 1V to V_{DD}
A_dnl	Differential nonlinearity. V_{DD} = 1.71V to 5.5V, 1 Msps	–1	–	2.2	LSB	V_{REF} = 1V to V_{DD}
A_DNL	Differential nonlinearity. V_{DD} = 1.71V to 3.6 V, 1 Msps	–1	–	2	LSB	V_{REF} = 1.71V to V_{DD}
A_DNL	Differential nonlinearity. V_{DD} = 1.71V to 5.5V, 500 Ksps	–1	–	2.2	LSB	V_{REF} = 1V to V_{DD}
A_THD	Total harmonic distortion	–	–	–65	dB	F_{IN} = 10 kHz

CSD

Table 22. CSD Block Specifications

Parameter	Description	Min	Typ	Max	Unit	Details/Conditions
V_{CSD}	Voltage range of operation	1.71	–	5.5	V	–
IDAC1	DNL for 8-bit resolution	–1	–	1	LSB	–
IDAC1	INL for 8-bit resolution	–3	–	3	LSB	–
IDAC2	DNL for 7-bit resolution	–1	–	1	LSB	–
IDAC2	INL for 7-bit resolution	–3	–	3	LSB	–

Table 22. CSD Block Specifications (continued)

Parameter	Description	Min	Typ	Max	Unit	Details/Conditions
SNR	Ratio of counts of finger to noise	5	–	–	Ratio	Capacitance range of 9 pF to 35 pF, 0.1-pF sensitivity. Radio is not operating during the scan
I_{DAC1_CRT1}	Output current of IDAC1 (8 bits) in High range	–	612	–	µA	–
I_{DAC1_CRT2}	Output current of IDAC1 (8 bits) in Low range	–	306	–	µA	–
I_{DAC2_CRT1}	Output current of IDAC2 (7 bits) in High range	–	305	–	µA	–
I_{DAC2_CRT2}	Output current of IDAC2 (7 bits) in Low range	–	153	–	µA	–

Digital Peripherals

Timer

Table 23. Timer DC Specifications

Parameter	Description	Min	Typ	Max	Unit	Details/Conditions
I_{TIM1}	Block current consumption at 3 MHz	–	–	42	µA	16-bit timer
I_{TIM2}	Block current consumption at 12 MHz	–	–	130	µA	16-bit timer
I_{TIM3}	Block current consumption at 48 MHz	–	–	535	µA	16-bit timer

Table 24. Timer AC Specifications

Parameter	Description	Min	Typ	Max	Unit	Details/Conditions
$T_{TIMFREQ}$	Operating frequency	F_{CLK}	–	48	MHz	–
$T_{CAPWINT}$	Capture pulse width (internal)	$2 \times T_{CLK}$	–	–	ns	–
$T_{CAPWEXT}$	Capture pulse width (external)	$2 \times T_{CLK}$	–	–	ns	–
T_{TIMRES}	Timer resolution	T_{CLK}	–	–	ns	–
$T_{TENWIDINT}$	Enable pulse width (internal)	$2 \times T_{CLK}$	–	–	ns	–
$T_{TENWIDEXT}$	Enable pulse width (external)	$2 \times T_{CLK}$	–	–	ns	–
$T_{TIMRESWINT}$	Reset pulse width (internal)	$2 \times T_{CLK}$	–	–	ns	–
$T_{TIMRESEXT}$	Reset pulse width (external)	$2 \times T_{CLK}$	–	–	ns	–

Counter

Table 25. Counter DC Specifications

Parameter	Description	Min	Typ	Max	Unit	Details/Conditions
I_{CTR1}	Block current consumption at 3 MHz	–	–	42	µA	16-bit counter
I_{CTR2}	Block current consumption at 12 MHz	–	–	130	µA	16-bit counter
I_{CTR3}	Block current consumption at 48 MHz	–	–	535	µA	16-bit counter

Table 26. Counter AC Specifications

Parameter	Description	Min	Typ	Max	Unit	Details/Conditions
$T_{CTRFREQ}$	Operating frequency	F_{CLK}	–	48	MHz	–
$T_{CTRPWINT}$	Capture pulse width (internal)	$2 \times T_{CLK}$	–	–	ns	–
$T_{CTRPWEXT}$	Capture pulse width (external)	$2 \times T_{CLK}$	–	–	ns	–

Table 26. Counter AC Specifications (continued)

Parameter	Description	Min	Typ	Max	Unit	Details/Conditions
T_{CTRES}	Counter Resolution	T_{CLK}	–	–	ns	–
$T_{CENWIDINT}$	Enable pulse width (internal)	$2 \times T_{CLK}$	–	–	ns	–
$T_{CENWIDEXT}$	Enable pulse width (external)	$2 \times T_{CLK}$	–	–	ns	–
$T_{CTRRESWINT}$	Reset pulse width (internal)	$2 \times T_{CLK}$	–	–	ns	–
$T_{CTRRESWEXT}$	Reset pulse width (external)	$2 \times T_{CLK}$	–	–	ns	–

Pulse Width Modulation (PWM)

Table 27. PWM DC Specifications

Parameter	Description	Min	Typ	Max	Unit	Details/Conditions
I_{PWM1}	Block current consumption at 3 MHz	–	–	42	µA	16-bit PWM
I_{PWM2}	Block current consumption at 12 MHz	–	–	130	µA	16-bit PWM
I_{PWM3}	Block current consumption at 48 MHz	–	–	535	µA	16-bit PWM

Table 28. PWM AC Specifications

Parameter	Description	Min	Typ	Max	Unit	Details/Conditions
$T_{PWMFREQ}$	Operating frequency	F_{CLK}	–	48	MHz	–
$T_{PWMPWINT}$	Pulse width (internal)	$2 \times T_{CLK}$	–	–	ns	–
T_{PWMEXT}	Pulse width (external)	$2 \times T_{CLK}$	–	–	ns	–
$T_{PWMKILLINT}$	Kill pulse width (internal)	$2 \times T_{CLK}$	–	–	ns	–
$T_{PWMKILLEXT}$	Kill pulse width (external)	$2 \times T_{CLK}$	–	–	ns	–
$T_{PWMEINT}$	Enable pulse width (internal)	$2 \times T_{CLK}$	–	–	ns	–
$T_{PWMENEXT}$	Enable pulse width (external)	$2 \times T_{CLK}$	–	–	ns	–
$T_{PWMRESWINT}$	Reset pulse width (internal)	$2 \times T_{CLK}$	–	–	ns	–
$T_{PWMRESWEXT}$	Reset pulse width (external)	$2 \times T_{CLK}$	–	–	ns	–

LCD Direct Drive

Table 29. LCD Direct Drive DC Specifications

Spec ID	Parameter	Description	Min	Typ	Max	Unit	Details/Conditions
SID228	I_{LCDLOW}	Operating current in low-power mode	–	17.5	–	µA	16 × 4 small segment display at 50 Hz
SID229	C_{LCDCAP}	LCD capacitance per segment/common driver	–	500	5000	pF	–
SID230	LCD_{OFFSET}	Long-term segment offset	–	20	–	mV	–
SID231	I_{LCDOP1}	LCD system operating current V_{BIAS} = 5 V	–	2	–	mA	32 × 4 segments. 50 Hz at 25 °C
SID232	I_{LCDOP2}	LCD system operating current V_{BIAS} = 3.3 V	–	2	–	mA	32 × 4 segments 50 Hz at 25 °C

Table 30. LCD Direct Drive AC Specifications

Spec ID	Parameter	Description	Min	Typ	Max	Unit	Details/Conditions
SID233	F_{LCD}	LCD frame rate	10	50	150	Hz	–

Serial Communication

Table 31. Fixed I²C DC Specifications

Parameter	Description	Min	Typ	Max	Unit	Details/Conditions
I_{I2C1}	Block current consumption at 100 kHz	–	–	50	µA	–
I_{I2C2}	Block current consumption at 400 kHz	–	–	155	µA	–
I_{I2C3}	Block current consumption at 1 Mbps	–	–	390	µA	–
I_{I2C4}	I²C enabled in Deep-Sleep mode	–	–	1.4	µA	–

Table 32. Fixed I²C AC Specifications

Parameter	Description	Min	Typ	Max	Unit	Details/Conditions
F_{I2C1}	Bit rate	–	–	400	kHz	–

Table 33. Fixed UART DC Specifications

Parameter	Description	Min	Typ	Max	Unit	Details/Conditions
I_{UART1}	Block current consumption at 100 kbps	–	–	55	µA	–
I_{UART2}	Block current consumption at 1000 kbps	–	–	312	µA	–

Table 34. Fixed UART AC Specifications

Parameter	Description	Min	Typ	Max	Unit	Details/Conditions
F_{UART}	Bit rate	–	–	1	Mbps	–

Table 35. Fixed SPI DC Specifications

Parameter	Description	Min	Typ	Max	Unit	Details/Conditions
I_{SPI1}	Block current consumption at 1 Mbps	–	–	360	µA	–
I_{SPI2}	Block current consumption at 4 Mbps	–	–	560	µA	–
I_{SPI3}	Block current consumption at 8 Mbps	–	–	600	µA	–

Table 36. Fixed SPI AC Specifications

Parameter	Description	Min	Typ	Max	Unit	Details/Conditions
F_{SPI}	SPI operating frequency (master; 6x over sampling)	–	–	8	MHz	–

Table 37. Fixed SPI Master Mode AC Specifications

Parameter	Description	Min	Typ	Max	Unit	Details/Conditions
T_{DMO}	MOSI valid after SCLK driving edge	–	–	18	ns	–
T_{DSI}	MISO valid before SCLK capturing edge Full clock, late MISO sampling used	20	–	–	ns	Full clock, late MISO sampling
T_{HMO}	Previous MOSI data hold time	0	–	–	ns	Referred to Slave capturing edge

Table 38. Fixed SPI Slave Mode AC Specifications

Parameter	Description	Min	Typ	Max	Unit
T_{DMI}	MOSI valid before SCLK capturing edge	40	–	–	ns
T_{DSO}	MISO valid after SCLK driving edge	–	–	$42 + 3 \times T_{CPU}$	ns
T_{DSO_ext}	MISO Valid after SCLK driving edge in external clock mode. $V_{DD} < 3.0V$	–	–	50	ns
T_{HSO}	Previous MISO data hold time	0	–	–	ns
$T_{SSELSCK}$	SSEL valid to first SCK valid edge	100	–	–	ns

Memory

Table 39. Flash DC Specifications

Parameter	Description	Min	Typ	Max	Unit	Details/Conditions
V_{PE}	Erase and program voltage	1.71	–	5.5	V	–
T_{WS48}	Number of Wait states at 32–48 MHz	2	–	–	_	CPU execution from flash
T_{WS32}	Number of Wait states at 16–32 MHz	1	–	–	_	CPU execution from flash
T_{WS16}	Number of Wait states for 0–16 MHz	0	–	–	_	CPU execution from flash

Table 40. Flash AC Specifications

Parameter	Description	Min	Typ	Max	Unit	Details/Conditions
$T_{ROWWRITE}$[5]	Row (block) write time (erase and program)	–	–	20	ms	Row (block) = 256 bytes
$T_{ROWERASE}$[5]	Row erase time	–	–	13	ms	–
$T_{ROWPROGRAM}$[5]	Row program time after erase	–	–	7	ms	–
$T_{BULKERASE}$[5]	Bulk erase time (256 KB)	–	–	35	ms	–
$T_{DEVPROG}$[5]	Total device program time	–	–	25	seconds	–
F_{END}	Flash endurance	100 K	–	–	cycles	–
F_{RET}	Flash retention. $T_A \leq 55$ °C, 100 K P/E cycles.	20	–	–	years	–
F_{RET2}	Flash retention. $T_A \leq 85$ °C, 10 K P/E cycles.	10	–	–	years	–

System Resources

Power-on-Reset (POR)

Table 41. POR DC Specifications

Parameter	Description	Min	Typ	Max	Unit	Details/Conditions
$V_{RISEIPOR}$	Rising trip voltage	0.80	–	1.45	V	–
$V_{FALLIPOR}$	Falling trip voltage	0.75	–	1.40	V	–
$V_{IPORHYST}$	Hysteresis	15	–	200	mV	–

Table 42. POR AC Specifications

Parameter	Description	Min	Typ	Max	Unit	Details/Conditions
T_{PPOR_TR}	Precision power-on reset (PPOR) response time in Active and Sleep modes	–	–	1	µs	–

Table 43. Brown-Out Detect

Parameter	Description	Min	Typ	Max	Unit	Details/Conditions
$V_{FALLPPOR}$	BOD trip voltage in Active and Sleep modes	1.64	–	–	V	–
$V_{FALLDPSLP}$	BOD trip voltage in Deep Sleep	1.4	–	–	V	–

Table 44. Hibernate Reset

Parameter	Description	Min	Typ	Max	Unit	Details/Conditions
$V_{HBRTRIP}$	BOD trip voltage in Hibernate	1.1	–	–	V	–

Note

5. It can take as much as 20 ms to write to flash. During this time, the device should not be reset, or flash operations will be interrupted and cannot be relied on to have completed. Reset sources include the XRES pin, software resets, CPU lockup states and privilege violations, improper power supply levels, and watchdogs. Make certain that these are not inadvertently activated.

Voltage Monitors (LVD)

Table 45. Voltage Monitor DC Specifications

Parameter	Description	Min	Typ	Max	Unit	Details/Conditions
V_{LVI1}	LVI_A/D_SEL[3:0] = 0000b	1.71	1.75	1.79	V	–
V_{LVI2}	LVI_A/D_SEL[3:0] = 0001b	1.76	1.80	1.85	V	–
V_{LVI3}	LVI_A/D_SEL[3:0] = 0010b	1.85	1.90	1.95	V	–
V_{LVI4}	LVI_A/D_SEL[3:0] = 0011b	1.95	2.00	2.05	V	–
V_{LVI5}	LVI_A/D_SEL[3:0] = 0100b	2.05	2.10	2.15	V	–
V_{LVI6}	LVI_A/D_SEL[3:0] = 0101b	2.15	2.20	2.26	V	–
V_{LVI7}	LVI_A/D_SEL[3:0] = 0110b	2.24	2.30	2.36	V	–
V_{LVI8}	LVI_A/D_SEL[3:0] = 0111b	2.34	2.40	2.46	V	–
V_{LVI9}	LVI_A/D_SEL[3:0] = 1000b	2.44	2.50	2.56	V	–
V_{LVI10}	LVI_A/D_SEL[3:0] = 1001b	2.54	2.60	2.67	V	–
V_{LVI11}	LVI_A/D_SEL[3:0] = 1010b	2.63	2.70	2.77	V	–
V_{LVI12}	LVI_A/D_SEL[3:0] = 1011b	2.73	2.80	2.87	V	–
V_{LVI13}	LVI_A/D_SEL[3:0] = 1100b	2.83	2.90	2.97	V	–
V_{LVI14}	LVI_A/D_SEL[3:0] = 1101b	2.93	3.00	3.08	V	–
V_{LVI15}	LVI_A/D_SEL[3:0] = 1110b	3.12	3.20	3.28	V	–
V_{LVI16}	LVI_A/D_SEL[3:0] = 1111b	4.39	4.50	4.61	V	–
LVI_IDD	Block current	–	–	100	µA	–

Table 46. Voltage Monitor AC Specifications

Parameter	Description	Min	Typ	Max	Unit	Details/Conditions
$T_{MONTRIP}$	Voltage monitor trip time	–	–	1	µs	–

SWD Interface

Table 47. SWD Interface Specifications

Parameter	Description	Min	Typ	Max	Unit	Details/Conditions
F_SWDCLK1	$3.3\ V \le V_{DD} \le 5.5\ V$	–	–	14	MHz	SWDCLK ≤ 1/3 CPU clock frequency
F_SWDCLK2	$1.71\ V \le V_{DD} \le 3.3\ V$	–	–	7	MHz	SWDCLK ≤ 1/3 CPU clock frequency
T_SWDI_SETUP	T = 1/f SWDCLK	0.25 × T	–	–	ns	–
T_SWDI_HOLD	T = 1/f SWDCLK	0.25 × T	–	–	ns	–
T_SWDO_VALID	T = 1/f SWDCLK	–	–	0.5 × T	ns	–
T_SWDO_HOLD	T = 1/f SWDCLK	1	–	–	ns	–

Internal Main Oscillator

Table 48. IMO DC Specifications

Parameter	Description	Min	Typ	Max	Unit	Details/Conditions
I_{IMO1}	IMO operating current at 48 MHz	–	–	1000	µA	–
I_{IMO2}	IMO operating current at 24 MHz	–	–	325	µA	–
I_{IMO3}	IMO operating current at 12 MHz	–	–	225	µA	–
I_{IMO4}	IMO operating current at 6 MHz	–	–	180	µA	–
I_{IMO5}	IMO operating current at 3 MHz	–	–	150	µA	–

Table 49. IMO AC Specifications

Parameter	Description	Min	Typ	Max	Unit	Details/Conditions
$F_{IMOTOL3}$	Frequency variation from 3 to 48 MHz	–	–	±2	%	With API-called calibration
$F_{IMOTOL3}$	IMO startup time	–	12	–	µs	–

Internal Low-Speed Oscillator

Table 50. ILO DC Specifications

Parameter	Description	Min	Typ	Max	Unit	Details/Conditions
I_{ILO2}	ILO operating current at 32 kHz	–	0.3	1.05	µA	–

Table 51. ILO AC Specifications

Parameter	Description	Min	Typ	Max	Unit	Details/Conditions
$T_{STARTILO1}$	ILO startup time	–	–	2	ms	–
$F_{ILOTRIM1}$	32-kHz trimmed frequency	15	32	50	kHz	–

Table 52. ECO Trim Value Specification

Parameter	Description	Value	Details/Conditions
ECO_{TRIM}	24-MHz trim value (firmware configuration)	0x00002D6A	Optimum trim value that needs to be loaded to register CY_SYS_XTAL_BLERD_BB_XO_CAPTRIM_REG

Table 53. UDB AC Specifications

Parameter	Description	Min	Typ	Max	Unit	Details/Conditions
Data Path performance						
$F_{MAX-TIMER}$	Max frequency of 16-bit timer in a UDB pair	–	–	48	MHz	–
$F_{MAX-ADDER}$	Max frequency of 16-bit adder in a UDB pair	–	–	48	MHz	–
F_{MAX_CRC}	Max frequency of 16-bit CRC/PRS in a UDB pair	–	–	48	MHz	–
PLD Performance in UDB						
F_{MAX_PLD}	Max frequency of 2-pass PLD function in a UDB pair	–	–	48	MHz	–
Clock to Output Performance						
$T_{CLK_OUT_UDB1}$	Prop. delay for clock in to data out at 25 °C, Typical	–	15	–	ns	–
$T_{CLK_OUT_UDB2}$	Prop. delay for clock in to data out, Worst case	–	25	–	ns	–

Table 54. BLE Subsystem

Parameter	Description	Min	Typ	Max	Unit	Details/Conditions
RF Receiver Specification						
RXS, IDLE	RX sensitivity with idle transmitter	–	–89	–	dBm	–
	RX sensitivity with idle transmitter excluding Balun loss	–	–91	–	dBm	Guaranteed by design simulation
RXS, DIRTY	RX sensitivity with dirty transmitter	–	–87	–70	dBm	RF-PHY Specification (RCV-LE/CA/01/C)
RXS, HIGHGAIN	RX sensitivity in high-gain mode with idle transmitter	–	–91	–	dBm	–
PRXMAX	Maximum input power	–10	–1	–	dBm	RF-PHY Specification (RCV-LE/CA/06/C)
CI1	Cochannel interference, Wanted signal at –67 dBm and Interferer at FRX	–	9	21	dB	RF-PHY Specification (RCV-LE/CA/03/C)
CI2	Adjacent channel interference Wanted signal at –67 dBm and Interferer at FRX ±1 MHz	–	3	15	dB	RF-PHY Specification (RCV-LE/CA/03/C)
CI3	Adjacent channel interference Wanted signal at –67 dBm and Interferer at FRX ±2 MHz	–	–29	–	dB	RF-PHY Specification (RCV-LE/CA/03/C)
CI4	Adjacent channel interference Wanted signal at –67 dBm and Interferer at ≥FRX ±3 MHz	–	–39	–	dB	RF-PHY Specification (RCV-LE/CA/03/C)
CI5	Adjacent channel interference Wanted Signal at –67 dBm and Interferer at Image frequency (F_{IMAGE})	–	–20	–	dB	RF-PHY Specification (RCV-LE/CA/03/C)
CI3	Adjacent channel interference Wanted signal at –67 dBm and Interferer at Image frequency (F_{IMAGE} ± 1 MHz)	–	–30	–	dB	RF-PHY Specification (RCV-LE/CA/03/C)
OBB1	Out-of-band blocking, Wanted signal at –67 dBm and Interferer at F = 30–2000 MHz	–30	–27	–	dBm	RF-PHY Specification (RCV-LE/CA/04/C)
OBB2	Out-of-band blocking, Wanted signal at –67 dBm and Interferer at F = 2003–2399 MHz	–35	–27	–	dBm	RF-PHY Specification (RCV-LE/CA/04/C)
OBB3	Out-of-band blocking, Wanted signal at –67 dBm and Interferer at F = 2484–2997 MHz	–35	–27	–	dBm	RF-PHY Specification (RCV-LE/CA/04/C)
OBB4	Out-of-band blocking, Wanted signal a –67 dBm and Interferer at F = 3000–12750 MHz	–30	–27	–	dBm	RF-PHY Specification (RCV-LE/CA/04/C)
IMD	Intermodulation performance Wanted signal at –64 dBm and 1-Mbps BLE, third, fourth, and fifth offset channel	–50	–	–	dBm	RF-PHY Specification (RCV-LE/CA/05/C)
RXSE1	Receiver spurious emission 30 MHz to 1.0 GHz	–	–	–57	dBm	100-kHz measurement bandwidth ETSI EN300 328 V1.8.1
RXSE2	Receiver spurious emission 1.0 GHz to 12.75 GHz	–	–	–47	dBm	1-MHz measurement bandwidth ETSI EN300 328 V1.8.1

Table 54. BLE Subsystem (continued)

Parameter	Description	Min	Typ	Max	Unit	Details/Conditions
RF Transmitter Specifications						
TXP, ACC	RF power accuracy	–	±1	–	dB	–
TXP, RANGE	RF power control range	–	20	–	dB	–
TXP, 0dBm	Output power, 0-dB Gain setting (PA7)	–	0	–	dBm	–
TXP, MAX	Output power, maximum power setting (PA10)	–	3	–	dBm	–
TXP, MIN	Output power, minimum power setting (PA1)	–	–18	–	dBm	–
F2AVG	Average frequency deviation for 10101010 pattern	185	–	–	kHz	RF-PHY Specification (TRM-LE/CA/05/C)
F1AVG	Average frequency deviation for 11110000 pattern	225	250	275	kHz	RF-PHY Specification (TRM-LE/CA/05/C)
EO	Eye opening = ΔF2AVG/ΔF1AVG	0.8	–	–		RF-PHY Specification (TRM-LE/CA/05/C)
FTX, ACC	Frequency accuracy	–150	–	150	kHz	RF-PHY Specification (TRM-LE/CA/06/C)
FTX, MAXDR	Maximum frequency drift	–50	–	50	kHz	RF-PHY Specification (TRM-LE/CA/06/C)
FTX, INITDR	Initial frequency drift	–20	–	20	kHz	RF-PHY Specification (TRM-LE/CA/06/C)
FTX, DR	Maximum drift rate	–20	–	20	kHz/ 50 µs	RF-PHY Specification (TRM-LE/CA/06/C)
IBSE1	In-band spurious emission at 2-MHz offset	–	–	–20	dBm	RF-PHY Specification (TRM-LE/CA/03/C)
IBSE2	In-band spurious emission at ≥3-MHz offset	–	–	–30	dBm	RF-PHY Specification (TRM-LE/CA/03/C)
TXSE1	Transmitter spurious emissions (average), <1.0 GHz	–	–	–55.5	dBm	FCC-15.247
TXSE2	Transmitter spurious emissions (average), >1.0 GHz	–	–	–41.5	dBm	FCC-15.247
RF Current Specifications						
IRX	Receive current in normal mode	–	18.7	–	mA	–
IRX_RF	Radio receive current in normal mode	–	16.4	–	mA	Measured at V_{DDR}
IRX, HIGHGAIN	Receive current in high-gain mode	–	21.5	–	mA	–
ITX, 3dBm	TX current at 3-dBm setting (PA10)	–	20	–	mA	–
ITX, 0dBm	TX current at 0-dBm setting (PA7)	–	16.5	–	mA	–
ITX_RF, 0dBm	Radio TX current at 0 dBm setting (PA7)	–	15.6	–	mA	Measured at V_{DDR}
ITX_RF, 0dBm	Radio TX current at 0 dBm excluding Balun loss	–	14.2	–	mA	Guaranteed by design simulation
ITX,-3dBm	TX current at –3-dBm setting (PA4)	–	15.5	–	mA	–
ITX,-6dBm	TX current at –6-dBm setting (PA3)	–	14.5	–	mA	–
ITX,-12dBm	TX current at –12-dBm setting (PA2)	–	13.2	–	mA	–
ITX,-18dBm	TX current at –18-dBm setting (PA1)	–	12.5	–	mA	–

Table 54. BLE Subsystem (continued)

Parameter	Description	Min	Typ	Max	Unit	Details/Conditions
Iavg_1sec, 0dBm	Average current at 1-second BLE connection interval	–	17.1	–	µA	TXP: 0 dBm; ±20-ppm master and slave clock accuracy. For empty PDU exchange.
Iavg_4sec, 0dBm	Average current at 4-second BLE connection interval	–	6.1	–	µA	TXP: 0 dBm; ±20-ppm master and slave clock accuracy. For empty PDU exchange.
General RF Specifications						
FREQ	RF operating frequency	2400	–	2482	MHz	–
CHBW	Channel spacing	–	2	–	MHz	–
DR	On-air data rate	–	1000	–	kbps	–
IDLE2TX	BLE.IDLE to BLE. TX transition time	–	120	140	µs	–
IDLE2RX	BLE.IDLE to BLE. RX transition time	–	75	120	µs	–
RSSI Specifications						
RSSI, ACC	RSSI accuracy	–	±5	–	dB	–
RSSI, RES	RSSI resolution	–	1	–	dB	–
RSSI, PER	RSSI sample period	–	6	–	µs	–

Environmental Specifications

Environmental Compliance

This Cypress BLE module is built in compliance with the Restriction of Hazardous Substances (RoHS) and Halogen Free (HF) directives. The Cypress module and components used to produce this module are RoHS and HF compliant.

RF Certification

The CYBLE-214015-01 module is certified under the following RF certification standards:

- FCC ID: WAP4008
- CE
- IC: 7922A-4008
- MIC: 203-JN0505
- KC: MSIP-CRM-Cyp-4008

Environmental Conditions

Table 55 describes the operating and storage conditions for the Cypress BLE module.

Table 55. Environmental Conditions for CYBLE-214015-01

Description	Minimum Specification	Maximum Specification
Operating temperature	–40 °C	85 °C
Operating humidity (relative, non-condensation)	5%	85%
Thermal ramp rate	–	3 °C/minute
Storage temperature	–40 °C	85 °C
Storage temperature and humidity	–	85 ° C at 85%
ESD: Module integrated into system Components[6]	–	15 kV Air 2.2 kV Contact

ESD and EMI Protection

Exposed components require special attention to ESD and electromagnetic interference (EMI).

A grounded conductive layer inside the device enclosure is suggested for EMI and ESD performance. Any openings in the enclosure near the module should be surrounded by a grounded conductive layer to provide ESD protection and a low-impedance path to ground.

Device Handling: Proper ESD protocol must be followed in manufacturing to ensure component reliability.

Note
6. This does not apply to the RF pins (ANT, XTALI, and XTALO). RF pins (ANT, XTALI, and XTALO) are tested for 500-V HBM.

Regulatory Information

FCC

FCC NOTICE:

The device CYBLE-214015-01 complies with Part 15 of the FCC Rules. The device meets the requirements for modular transmitter approval as detailed in FCC public Notice DA00-1407. Transmitter Operation is subject to the following two conditions: (1) This device may not cause harmful interference, and (2) This device must accept any interference received, including interference that may cause undesired operation.

CAUTION:

The FCC requires the user to be notified that any changes or modifications made to this device that are not expressly approved by Cypress Semiconductor may void the user's authority to operate the equipment.

This equipment has been tested and found to comply with the limits for a Class B digital device, pursuant to Part 15 of the FCC Rules. These limits are designed to provide reasonable protection against harmful interference in a residential installation. This equipment generates and can radiate radio frequency energy and, if not installed and used in accordance with the instructions,ê may cause harmful interference to radio communications. However, there is no guarantee that interference will not occur in a particular installation. If this equipment does cause harmful interference to radio or television reception, which can be determined by turning the equipment off and on, the user is encouraged to try to correct the interference by one or more of the following measures:

- Reorient or relocate the receiving antenna.
- Increase the separation between the equipment and receiver.
- Connect the equipment into an outlet on a circuit different from that to which the receiver is connected.
- Consult the dealer or an experienced radio/TV technician for help

LABELING REQUIREMENTS:

The Original Equipment Manufacturer (OEM) must ensure that FCC labelling requirements are met. This includes a clearly visible label on the outside of the OEM enclosure specifying the appropriate Cypress Semiconductor FCC identifier for this product as well as the FCC Notice above. The FCC identifier is FCC ID: WAP4008.

In any case the end product must be labeled exterior with "Contains FCC ID: WAP4008"

ANTENNA WARNING:

This device is tested with a standard SMA connector and with the antennas listed in Table 7 on page 14. When integrated in the OEMs product, these fixed antennas require installation preventing end-users from replacing them with non-approved antennas. Any antenna not in the following table must be tested to comply with FCC Section 15.203 for unique antenna connectors and Section 15.247 for emissions.

RF EXPOSURE:

To comply with FCC RF Exposure requirements, the Original Equipment Manufacturer (OEM) must ensure to install the approved antenna in the previous.

The preceding statement must be included as a CAUTION statement in manuals, for products operating with the approved antennas in Table 7 on page 14, to alert users on FCC RF Exposure compliance. Any notification to the end user of installation or removal instructions about the integrated radio module is not allowed.

The radiated output power of CYBLE-214015-01 is far below the FCC radio frequency exposure limits. Nevertheless, use CYBLE-214015-01 in such a manner that minimizes the potential for human contact during normal operation.

End users may not be provided with the module installation instructions. OEM integrators and end users must be provided with transmitter operating conditions for satisfying RF exposure compliance.

Industry Canada (IC) Certification

CYBLE-214015-01 is licensed to meet the regulatory requirements of Industry Canada (IC),

License: IC: 7922A-4008

Manufacturers of mobile, fixed or portable devices incorporating this module are advised to clarify any regulatory questions and ensure compliance for SAR and/or RF exposure limits. Users can obtain Canadian information on RF exposure and compliance from www.ic.gc.ca.

This device has been designed to operate with the antennas listed in Table 7 on page 14, having a maximum gain of -0.5 dBi. Antennas not included in this list or having a gain greater than -0.5 dBi are strictly prohibited for use with this device. The required antenna impedance is 50 ohms. The antenna used for this transmitter must not be co-located or operating in conjunction with any other antenna or transmitter.

IC NOTICE:

The device CYBLE-214015-01 complies with Canada RSS-GEN Rules. The device meets the requirements for modular transmitter approval as detailed in RSS-GEN. Operation is subject to the following two conditions: (1) This device may not cause harmful interference, and (2) This device must accept any interference received, including interference that may cause undesired operation.

IC RADIATION EXPOSURE STATEMENT FOR CANADA

This device complies with Industry Canada licence-exempt RSS standard(s). Operation is subject to the following two conditions: (1) this device may not cause interference, and (2) this device must accept any interference, including interference that may cause undesired operation of the device.

Le présent appareil est conforme aux CNR d'Industrie Canada applicables aux appareils radio exempts de licence. L'exploitation est autorisée aux deux conditions suivantes : (1) l'appareil ne doit pas produire de brouillage, et (2) l'utilisateur de l'appareil doit accepter tout brouillage radioélectrique subi, même si le brouillage est susceptible d'en compromettre le fonctionnement.

LABELING REQUIREMENTS:

The Original Equipment Manufacturer (OEM) must ensure that IC labelling requirements are met. This includes a clearly visible label on the outside of the OEM enclosure specifying the appropriate Cypress Semiconductor IC identifier for this product as well as the IC Notice above. The IC identifier is 7922A-4008. In any case, the end product must be labeled in its exterior with "Contains IC: 7922A-4008".

European R&TTE Declaration of Conformity

Hereby, Cypress Semiconductor declares that the Bluetooth module CYBLE-214015-01 complies with the essential requirements and other relevant provisions of Directive 1999/5/EC. As a result of the conformity assessment procedure described in Annex III of the Directive 1999/5/EC, the end-customer equipment should be labeled as follows:

All versions of the CYBLE-214015-01 in the specified reference design can be used in the following countries: Austria, Belgium, Cyprus, Czech Republic, Denmark, Estonia, Finland, France, Germany, Greece, Hungary, Ireland, Italy, Latvia, Lithuania, Luxembourg, Malta, Poland, Portugal, Slovakia, Slovenia, Spain, Sweden, The Netherlands, the United Kingdom, Switzerland, and Norway.

MIC Japan

CYBLE-214015-01 is certified as a module with type certification number 203-JN0505. End products that integrate CYBLE-214015-01 do not need additional MIC Japan certification for the end product.

End product can display the certification label of the embedded module.

Model Name: EZ-BLE PSoC Module

Part Number: CYBLE-214015-01

Manufactured by Cypress Semiconductor.

R 203-JN0505

KC Korea

CYBLE-214015-01 is certified for use in Korea with certificate number MSIP-CRM-Cyp-4008.

한국 인증 세부정보:

1. 제품명(모델명): 특정소출력무선기기(무선데이터통신시스템용 무선기기), CYBLE-214015-01
2. 인증 번호: MSIP-CRM-Cyp-4008
3. 라이선스 소유자: Cypress Semiconductor Corporation
4. 제조일자: 2015.12
5. 제조업체/국가명: Cypress Semiconductor Corporation/ 중국

해당 무선설비는 전파혼신 가능성이 있으므로 인명안전과 관련된 서비스는 할 수 없습니다.

Packaging

Table 56. Solder Reflow Peak Temperature

Module Part Number	Package	Maximum Peak Temperature	Maximum Time at PeakTemperature	No. of Cycles
CYBLE-214015-01	32-pad SMT	260 °C	30 seconds	2

Table 57. Package Moisture Sensitivity Level (MSL), IPC/JEDEC J-STD-2

Module Part Number	Package	MSL
CYBLE-214015-01	32-pad SMT	MSL 3

The CYBLE-214015-01 is offered in tape and reel packaging. Figure 10 details the tape dimensions used for the CYBLE-214015-01.

Figure 10. CYBLE-214015-01 Tape Dimensions

Item	W	A_0	B_0	K_0	K_1	P_1	F	E	D_0	D_1	P_0	P_2	T
Measurement	$24.0^{+0.30}_{-0.30}$	$11.3^{+0.10}_{-0.10}$	$11.3^{+0.10}_{-0.10}$	$2.3^{+0.10}_{-0.10}$	$^{+0.10}_{-0.10}$	$16.0^{+0.10}_{-0.10}$	$11.5^{+0.10}_{-0.10}$	$1.75^{+0.10}_{-0.10}$	$1.50^{+0.10}_{-0.00}$	$1.50^{+0.10}_{-0.10}$	$4.00^{+0.10}_{-0.10}$	$2.00^{+0.10}_{-0.10}$	$0.30^{+0.05}_{-0.05}$

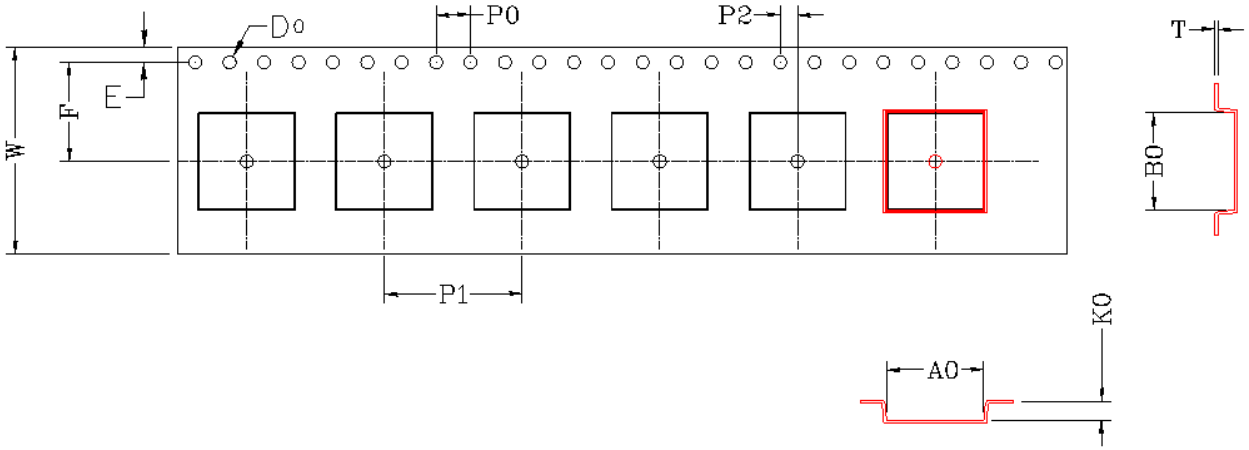

Figure 11 details the orientation of the CYBLE-214015-01 in the tape as well as the direction for unreeling.

Figure 11. Component Orientation in Tape and Unreeling Direction

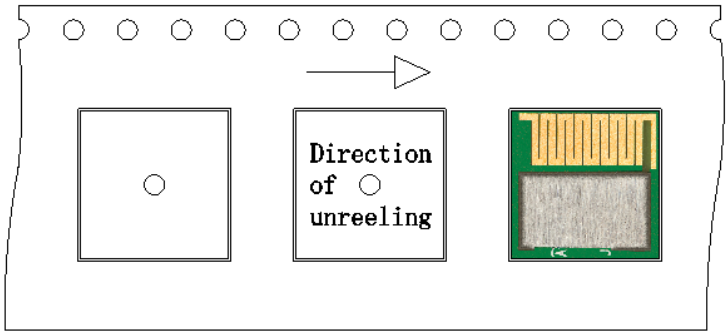

Figure 12 details reel dimensions used for the CYBLE-214015-01.

Figure 12. Reel Dimensions

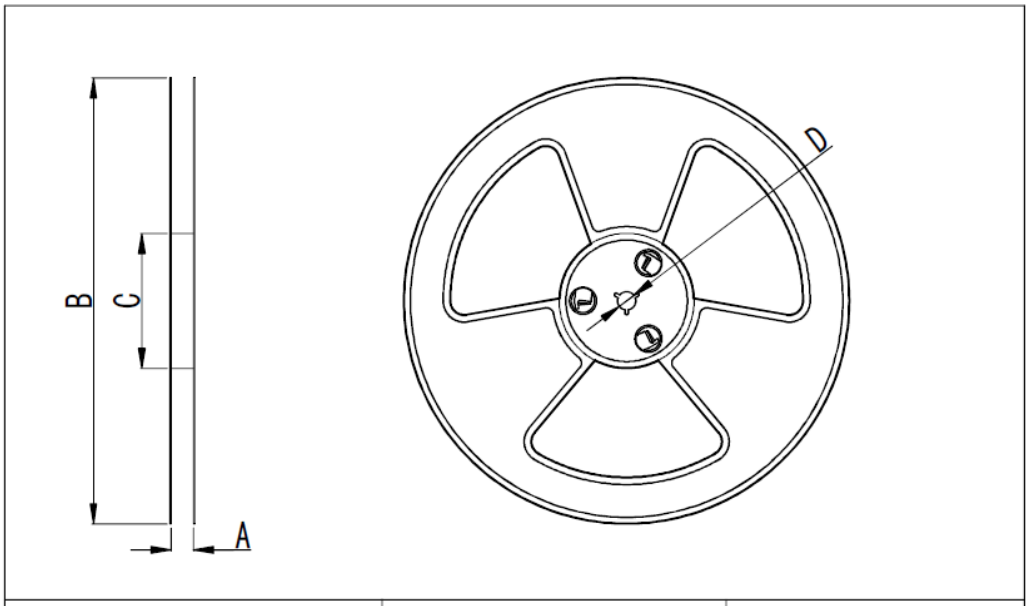

Index	NOTE	Dimension	Tolerance	
A	Inside Width	24.5	+0.50mm	-0.50mm
B	Reel Diameter	330.00	+1.5mm	-1.5mm
C	Outer Axis Diameter	100.00	+1.5mm	-1.5mm
D	Inner Axis Diameter	13.00	+0.50mm	-0.50mm

The CYBLE-214015-01 is designed to be used with pick-and-place equipment in an SMT manufacturing environment. The center-of-mass for the CYBLE-214015-01 is detailed in Figure 13.

Figure 13. CYBLE-214015-01 Center of Mass

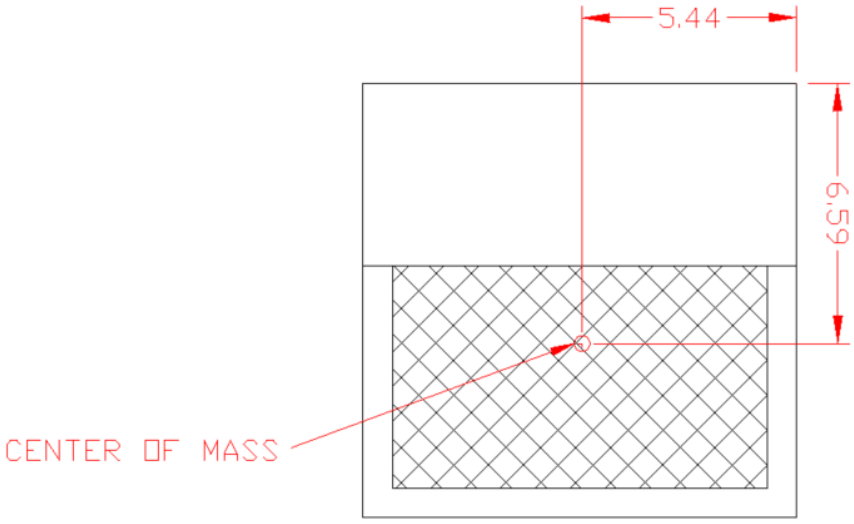

Ordering Information

Table 58 lists the CYBLE-214015-01 part number and features. Table 59 lists the reel shipment quantities for the CYBLE-214015-01.

Table 58. Ordering Information

MPN	Features														Package
	Max CPU Speed (MHz)	Flash (KB)	SRAM (KB)	UDB	Opamp (CTBm)	CapSense	Direct LCD Drive	12-bit SAR ADC	LP Comparators	TCPWM Blocks	SCB Blocks	PWMs (using UDBs)	I2S (using UDB)	GPIO	
CYBLE-214015-01	48	256	32	4	4	✓	✓	1 Msps	1	4	2	4	✓	25	32-SMT

Table 59. Tape and Reel Package Quantity and Minimum Order Amount

Description	Minimum Reel Quantity	Maximum Reel Quantity	Comments
Reel Quantity	500	2,000	Reel quantity ships in increments of 500 units up to a maximum of 2,000 depending on line item order quantity.
Minimum Order Quantity (MOQ)	500	–	
Order Increment (OI)	500	–	

The CYBLE-214015-01 is offered in tape and reel packaging. The CYBLE-214015-01 ships with a maximum of 2,000 units/reel. If a 500 unit reel is desired, an order should be placed with a single line item of 500 units. Order line items larger than 500 units will be shipped in multiples of either 1,000, 1,500, or 2,000 units per reel based on the order line item quantity.

Part Numbering Convention

The part numbers are of the form CYBLE-ABCDEF-GH where the fields are defined as follows.

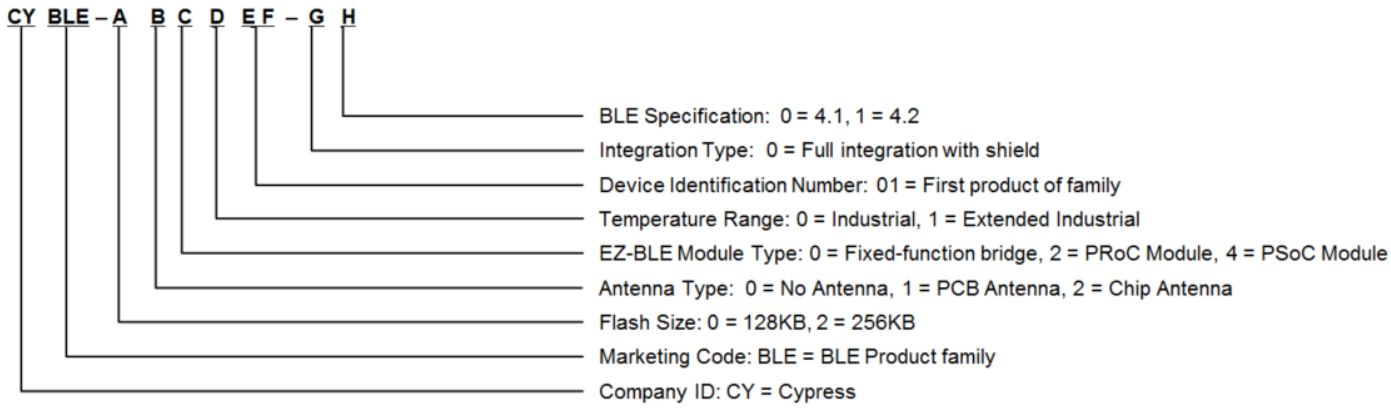

For additional information and a complete list of Cypress Semiconductor BLE products, contact your local Cypress sales representative. To locate the nearest Cypress office, visit our website.

U.S. Cypress Headquarters Address	198 Champion Court, San Jose, CA 95134
U.S. Cypress Headquarter Contact Info	(408) 943-2600
Cypress website address	http://www.cypress.com

Acronyms

Table 60. Acronyms Used in this Document

Acronym	Description
ABUS	analog local bus
ADC	analog-to-digital converter
AG	analog global
AHB	AMBA (advanced microcontroller bus architecture) high-performance bus, an ARM data transfer bus
ALU	arithmetic logic unit
AMUXBUS	analog multiplexer bus
API	application programming interface
APSR	application program status register
ARM®	advanced RISC machine, a CPU architecture
ATM	automatic thump mode
BLE	Bluetooth Low Energy
Bluetooth SIG	Bluetooth Special Interest Group
BW	bandwidth
CAN	Controller Area Network, a communications protocol
CE	European Conformity
CSA	Canadian Standards Association
CMRR	common-mode rejection ratio
CPU	central processing unit
CRC	cyclic redundancy check, an error-checking protocol
DAC	digital-to-analog converter, see also IDAC, VDAC
DFB	digital filter block
DIO	digital input/output, GPIO with only digital capabilities, no analog. See GPIO.
DMIPS	Dhrystone million instructions per second
DMA	direct memory access, see also TD
DNL	differential nonlinearity, see also INL
DNU	do not use
DR	port write data registers
DSI	digital system interconnect
DWT	data watchpoint and trace
ECC	error correcting code
ECO	external crystal oscillator
EEPROM	electrically erasable programmable read-only memory
EMI	electromagnetic interference

Table 60. Acronyms Used in this Document (continued)

Acronym	Description
EMIF	external memory interface
EOC	end of conversion
EOF	end of frame
EPSR	execution program status register
ESD	electrostatic discharge
ETM	embedded trace macrocell
FCC	Federal Communications Commission
FET	field-effect transistor
FIR	finite impulse response, see also IIR
FPB	flash patch and breakpoint
FS	full-speed
GPIO	general-purpose input/output, applies to a PSoC pin
HCI	host controller interface
HVI	high-voltage interrupt, see also LVI, LVD
IC	integrated circuit
IDAC	current DAC, see also DAC, VDAC
IDE	integrated development environment
I^2C, or IIC	Inter-Integrated Circuit, a communications protocol
IC	Industry Canada
IIR	infinite impulse response, see also FIR
ILO	internal low-speed oscillator, see also IMO
IMO	internal main oscillator, see also ILO
INL	integral nonlinearity, see also DNL
I/O	input/output, see also GPIO, DIO, SIO, USBIO
IPOR	initial power-on reset
IPSR	interrupt program status register
IRQ	interrupt request
ITM	instrumentation trace macrocell
KC	Korea Certification
LCD	liquid crystal display
LIN	Local Interconnect Network, a communications protocol.
LR	link register
LUT	lookup table
LVD	low-voltage detect, see also LVI
LVI	low-voltage interrupt, see also HVI
LVTTL	low-voltage transistor-transistor logic

Table 60. Acronyms Used in this Document (continued)

Acronym	Description
MAC	multiply-accumulate
MCU	microcontroller unit
MIC	Ministry of Internal Affairs and Communications (Japan)
MISO	master-in slave-out
NC	no connect
NMI	nonmaskable interrupt
NRZ	non-return-to-zero
NVIC	nested vectored interrupt controller
NVL	nonvolatile latch, see also WOL
Opamp	operational amplifier
PAL	programmable array logic, see also PLD
PC	program counter
PCB	printed circuit board
PGA	programmable gain amplifier
PHUB	peripheral hub
PHY	physical layer
PICU	port interrupt control unit
PLA	programmable logic array
PLD	programmable logic device, see also PAL
PLL	phase-locked loop
PMDD	package material declaration data sheet
POR	power-on reset
PRES	precise power-on reset
PRS	pseudo random sequence
PS	port read data register
PSoC®	Programmable System-on-Chip™
PSRR	power supply rejection ratio
PWM	pulse-width modulator
QDID	qualification design ID
RAM	random-access memory
RISC	reduced-instruction-set computing
RMS	root-mean-square
RTC	real-time clock
RTL	register transfer language
RTR	remote transmission request
RX	receive
SAR	successive approximation register
SC/CT	switched capacitor/continuous time
SCL	I^2C serial clock

Table 60. Acronyms Used in this Document (continued)

Acronym	Description
SDA	I^2C serial data
S/H	sample and hold
SINAD	signal to noise and distortion ratio
SIO	special input/output, GPIO with advanced features. See GPIO.
SMT	surface-mount technology; a method for producing electronic circuitry in which the components are placed directly onto the surface of PCBs
SOC	start of conversion
SOF	start of frame
SPI	Serial Peripheral Interface, a communications protocol
SR	slew rate
SRAM	static random access memory
SRES	software reset
STN	super twisted nematic
SWD	serial wire debug, a test protocol
SWV	single-wire viewer
TD	transaction descriptor, see also DMA
THD	total harmonic distortion
TIA	transimpedance amplifier
TN	twisted nematic
TRM	technical reference manual
TTL	transistor-transistor logic
TUV	Germany: Technischer Überwachungs-Verein (Technical Inspection Association)
TX	transmit
UART	Universal Asynchronous Transmitter Receiver, a communications protocol
UDB	universal digital block
USB	Universal Serial Bus
USBIO	USB input/output, PSoC pins used to connect to a USB port
VDAC	voltage DAC, see also DAC, IDAC
WDT	watchdog timer
WOL	write once latch, see also NVL
WRES	watchdog timer reset
XRES	external reset I/O pin
XTAL	crystal

Document Conventions

Units of Measure

Table 61. Units of Measure

Symbol	Unit of Measure
°C	degrees Celsius
dB	decibel
dBm	decibel-milliwatts
fF	femtofarads
Hz	hertz
KB	1024 bytes
kbps	kilobits per second
Khr	kilohour
kHz	kilohertz
kΩ	kilo ohm
ksps	kilosamples per second
LSB	least significant bit
Mbps	megabits per second
MHz	megahertz
MΩ	mega-ohm
Msps	megasamples per second
µA	microampere
µF	microfarad
µH	microhenry
µs	microsecond
µV	microvolt
µW	microwatt
mA	milliampere
ms	millisecond
mV	millivolt
nA	nanoampere
ns	nanosecond
nV	nanovolt
Ω	ohm
pF	picofarad
ppm	parts per million
ps	picosecond
s	second
sps	samples per second
sqrtHz	square root of hertz
V	volt

Document History Page

Document Title: CYBLE-214015-01, EZ-BLE™ PSoC® Bluetooth 4.2 Module Document Number: 002-15923				
Revision	**ECN**	**Orig. of Change**	**Submission Date**	**Description of Change**
**		DSO	08/17/2016	Preliminary datasheet for CYBLE-214015-01 module.

Sales, Solutions, and Legal Information

Worldwide Sales and Design Support

Cypress maintains a worldwide network of offices, solution centers, manufacturer's representatives, and distributors. To find the office closest to you, visit us at Cypress Locations.

Products

ARM® Cortex® Microcontrollers	cypress.com/arm
Automotive	cypress.com/automotive
Clocks & Buffers	cypress.com/clocks
Interface	cypress.com/interface
Lighting & Power Control	cypress.com/powerpsoc
Memory	cypress.com/memory
PSoC	cypress.com/psoc
Touch Sensing	cypress.com/touch
USB Controllers	cypress.com/usb
Wireless/RF	cypress.com/wireless

PSoC® Solutions

cypress.com/psoc

PSoC 1 | PSoC 3 | PSoC 4 | PSoC 5LP

Cypress Developer Community

Community | Forums | Blogs | Video | Training

Technical Support

cypress.com/support

© Cypress Semiconductor Corporation 2016. This document is the property of Cypress Semiconductor Corporation and its subsidiaries, including Spansion LLC ("Cypress"). This document, including any software or firmware included or referenced in this document ("Software"), is owned by Cypress under the intellectual property laws and treaties of the United States and other countries worldwide. Cypress reserves all rights under such laws and treaties and does not, except as specifically stated in this paragraph, grant any license under its patents, copyrights, trademarks, or other intellectual property rights. If the Software is not accompanied by a license agreement and you do not otherwise have a written agreement with Cypress governing the use of the Software, then Cypress hereby grants you under its copyright rights in the Software, a personal, non-exclusive, nontransferable license (without the right to sublicense) (a) for Software provided in source code form, to modify and reproduce the Software solely for use with Cypress hardware products, only internally within your organization, and (b) to distribute the Software in binary code form externally to end users (either directly or indirectly through resellers and distributors), solely for use on Cypress hardware product units. Cypress also grants you a personal, non-exclusive, nontransferable, license (without the right to sublicense) under those claims of Cypress's patents that are infringed by the Software (as provided by Cypress, unmodified) to make, use, distribute, and import the Software solely to the minimum extent that is necessary for you to exercise your rights under the copyright license granted in the previous sentence. Any other use, reproduction, modification, translation, or compilation of the Software is prohibited.

CYPRESS MAKES NO WARRANTY OF ANY KIND, EXPRESS OR IMPLIED, WITH REGARD TO THIS DOCUMENT OR ANY SOFTWARE, INCLUDING, BUT NOT LIMITED TO, THE IMPLIED WARRANTIES OF MERCHANTABILITY AND FITNESS FOR A PARTICULAR PURPOSE. Cypress reserves the right to make changes to this document without further notice. Cypress does not assume any liability arising out of the application or use of any product or circuit described in this document. Any information provided in this document, including any sample design information or programming code, is provided only for reference purposes. It is the responsibility of the user of this document to properly design, program, and test the functionality and safety of any application made of this information and any resulting product. Cypress products are not designed, intended, or authorized for use as critical components in systems designed or intended for the operation of weapons, weapons systems, nuclear installations, life-support devices or systems, other medical devices or systems (including resuscitation equipment and surgical implants), pollution control or hazardous substances management, or other uses where the failure of the device or system could cause personal injury, death, or property damage ("Unintended Uses"). A critical component is any component of a device or system whose failure to perform can be reasonably expected to cause the failure of the device or system, or to affect its safety or effectiveness. Cypress is not liable, in whole or in part, and Company shall and hereby does release Cypress from any claim, damage, or other liability arising from or related to all Unintended Uses of Cypress products. Company shall indemnify and hold Cypress harmless from and against all claims, costs, damages, and other liabilities, including claims for personal injury or death, arising from or related to any Unintended Uses of Cypress products.

Cypress, the Cypress logo, Spansion, the Spansion logo, and combinations thereof, PSoC, CapSense, EZ-USB, F-RAM, and Traveo are trademarks or registered trademarks of Cypress in the United States and other countries. For a more complete list of Cypress trademarks, visit cypress.com. Other names and brands may be claimed as property of their respective owners.