AIROC™ Bluetooth® LE module

General description

The CYBLE-416070-02 is a fully certified and qualified module supporting, features out-of-box security functionality, providing an isolated root-of-trust with between communication and Bluetooth® Low Energy wireless communication. The CYBLE-416070-02 is a turnkey solution and includes onboard crystal oscillators, trace antenna, passive components, and the Infineon PSoC™ 64 Bluetooth® LE silicon device. Refer to the PSoC™ 64 Bluetooth® LE **datasheet** for additional details on the capabilities of the PSoC™ 64 Bluetooth® LE device used on this module.

The AIROC™ Bluetooth® LE module is a scalable and reconfigurable platform architecture. It combines programmable and reconfigurable analog and digital blocks with flexible automatic routing. The CYBLE-416070-02 also includes digital programmable logic, high-performance analog-to-digital conversion (ADC), low-power comparators, and standard communication and timing peripherals.

The CYBLE-416070-02 includes a royalty-free Bluetooth® LE stack compatible with Bluetooth® 5.0 and provides up to 36 GPIOs in a 14 × 18.5 × 2.00 mm package.

The CYBLE-416070-02 is a complete solution and an ideal fit for applications seeking a high-performance Bluetooth® LE wireless solution.

Module description

- Module size: 14.0 mm × 18.5 mm × 2.00 mm (with shield)
- 1 MB Application Flash with 32-KB EEPROM area and 32-KB Secure Flash
- 288-KB SRAM with Selectable Retention Granularity
- Up to 36 GPIOs with programmable drive modes, strengths, and slew rates
- Bluetooth® 5.0 qualified single-mode module
  - QDID: **D040144**
  - Declaration ID: **112778**
- Certified to FCC, CE, MIC, and ISED regulations
- Industrial temperature range: –40°C to +85°C
- 150-MHz Arm® Cortex®-M4F CPU with single-cycle multiply (Floating Point Unit (FPU) and Memory Protection Unit (MPU))
- 100-MHz Cortex®-M0+ CPU with single-cycle multiply and MPU

Note: In PSoC™ 64 the Cortex® M0+ is reserved for system functions, and is not available for applications.

- OTP eFuse memory for validation and security
- Power consumption
  - TX output power: –20 dbm to +4 dbm
  - Received signal strength indication (RSSI) with 4-dB resolution
  - TX current consumption of 5.7 mA (radio only, 0 dbm)
  - RX current consumption of 6.7 mA (radio only)
- Hardware-Based Root-of-Trust (RoT)
  - RoT based on immutable boot-up code, flash content hash, and Infineon public key that ensures firmware integrity prior to provisioning
  - Supports trusted RoT handover to maintain chain of trust and establish OEM trust anchor for secured boot
  - Device generates a unique device ID and a device secret key during the provisioning process, which can be used for attestation and signing

- Immutable “Secure Boot” support
  - Flexible chain of trust can use different signatures for different images
  - ECC-based image signature validation
- Infineon bootloader
  - Open source MCUBoot[1] based bootloader optimized for PSoC™ 64 MCU
  - Pre-built bootloader binary capable of validating, launching and updating signed user application images
  - Tightly integrated with provisioned debug and boot policies to inherit and implement security policies
- Low-power 1.71 V to 3.6 V operation
  - Active, Low-power Active, Sleep, Low-power Sleep, Deep Sleep, and Hibernate modes for fine-grained power management
  - Deep Sleep mode current with 64K SRAM retention is 7 µA with 3.3-V external supply and internal buck
  - On-chip Single-In Multiple Out (SIMO) DC-DC Buck converter, less than 1 µA quiescent current
  - Backup domain with 64 bytes of memory and Real-Time-Clock (RTC) programmable analog
- Serial communication
  - Five independent runtime reconfigurable serial communication blocks (SCBs), each is software configurable as I^2C, SPI, or UART
- Timing and Pulse-Width Modulation (TCPWM)
  - Thirty-two TCPWM blocks
  - Center-aligned, Edge, and Pseudo-random modes
  - Comparator-based triggering of Kill signals
- Up to 36 programmable GPIOs
  - Any GPIO pin can be CAPSENSE™, analog/digital
- Audio subsystem
  - I^2S interface; up to 192 kilosamples (ksps) word clock
  - Two pulse-density modulation (PDM) channels for stereo digital microphones
- Programmable analog
  - 12-bit 1 Msps SAR ADC with differential and single-ended modes and Sequencer with signal averaging
  - One 12-bit voltage mode DAC with less than 5 µs settling time
  - Two opamps with low-power operation modes
  - Two low-power comparators that operate in Deep Sleep and Hibernate modes
  - Built-in temperature sensor connected to ADC
- Programmable digital
  - 12 programmable logic blocks, each with eight macrocells and an 8-bit data path (called universal digital blocks or UDBs)
  - Usable as drag-and-drop Boolean primitives (gates, registers), or as Verilog programmable blocks
  - Infineon-provided peripheral component library using UDBs to implement functions such as communication peripherals (for example, LIN, UART, SPI, I^2C, S/PDIF and other protocols), waveform generators, pseudo-random sequence (PRS) generation, and other functions.
  - Smart I/O (Programmable I/O) blocks enable Boolean operations on signals coming from, and going to, GPIO pins
  - Two ports with Smart I/O block capability are provided and are available during Deep Sleep

Note

1. For details, refer to **mcuboot.com**.

- Capacitive sensing
  - Infineon Capacitive Sigma-Delta (CSD) provides best-in-class SNR, liquid tolerance, and proximity sensing
  - Mutual capacitance sensing (Infineon CSX) with dynamic usage of both self and mutual sensing
  - Wake-on-Touch (WOT) with very low current
  - Infineon-supplied software component makes capacitive sensing design fast and easy
  - Automatic hardware tuning (SmartSense)
- Energy profiler
  - Block that provides history of time spent in different power modes
  - Software energy profiling to observe and optimize energy consumption
- Security built into platform architecture
  - Multi-faceted secure architecture based on ROM-based root of trust
  - Secure boot uninterruptible until system protection attributes are established
  - Authentication during boot using hardware hashing
  - Step-wise authentication of execution images
  - Secure execution of code in execute only mode for protected routines
  - All debug and test ingress paths can be disabled
- Cryptography accelerators
  - Hardware acceleration for Symmetric and Asymmetric Cryptographic methods (AES, 3DES, RSA, and ECC) and Hash functions (SHA-512, SHA-256)
  - True Random Number Generator (TRNG) function

More information

Infineon provides a wealth of data at **www.infineon.com** to help you to select the right module for your design, and to help you to quickly and effectively integrate the module into your design.

- Overview: **Module roadmap**
- **PSoC™ 6 Bluetooth® LE silicon datasheet**
- Application Notes cover a broad range of topics, from basic to advanced level, and include the following:
  - **AN221774**: Getting Started with PSoC™ 6 MCU
  - **AN218241**: PSoC™ 6 MCU hardware design guide
  - **AN213924**: PSoC™ 6 MCU device firmware update guide
  - **AN215656**: PSoC™ 6 MCU dual-CPU system design
  - **AN219528**: PSoC™ 6 MCU power reduction techniques
  - **AN85951**: PSoC™ 4, PSoC™ 6 MCU CAPSENSE™ design guide
- **Code examples** demonstrate product features and usage, and are also available on **Infineon GitHub** repositories
- **Technical Reference Manuals (TRMs)** provide detailed descriptions of PSoC™ 6 MCU architecture and registers.
- **PSoC™ 6 MCU programming specification** provides the information necessary to program PSoC™ 6 MCU nonvolatile memory
- Development kits:
  - CYBLE-416070EVAL, CYBLE-416070-02 evaluation board
  - **CY8CKIT-064S0S2-4343W**, AWS AIROC™ Wi-Fi Bluetooth® pioneer kit
- Test and debug tools:
  - **CYSmart**, Bluetooth® LE test and debug tool (Windows)
  - **CYSmart Mobile**, Bluetooth® LE test and debug tool (Android/iOS Mobile App)

ModusToolbox™ software

ModusToolbox™ software is Infineon comprehensive collection of multi-platform tools and software libraries that enable an immersive development experience for creating converged MCU and wireless systems. It is:

- Comprehensive - it has the resources you need
- Flexible - you can use the resources in your own workflow
- Atomic - you can get just the resources you want

Infineon provides a large collection of code **repositories on GitHub**. This includes:

- Board support packages (BSPs) aligned with Infineon kits
- Low-level resources, including a hardware abstraction layer (HAL) and peripheral driver library (PDL)
- Middleware enabling industry-leading features such as CAPSENSE™, Bluetooth® Low Energy, and mesh networks
- An extensive set of thoroughly tested **code example applications**

Note: The HAL provides a high-level, simplified interface to configure and use the hardware blocks on Infineon MCUs. It is a generic interface that can be used across multiple product families. For example, it wraps the PSoC™ 6 PDL with a simplified API, but the PDL exposes all low-level peripheral functionality. You can leverage the HAL's simpler and more generic interface for most of an application, even if one portion requires finer-grained control.

ModusToolbox™ software is IDE-neutral and easily adaptable to your workflow and preferred development environment. It includes a project creator, peripheral and library configurators, a library manager, as well as the optional Eclipse IDE for ModusToolbox™ software. For information on using Infineon tools, refer to the documentation delivered with ModusToolbox™ software, and **AN228571- Getting started with PSoC™ 6 MCU on ModusToolbox™ software**.

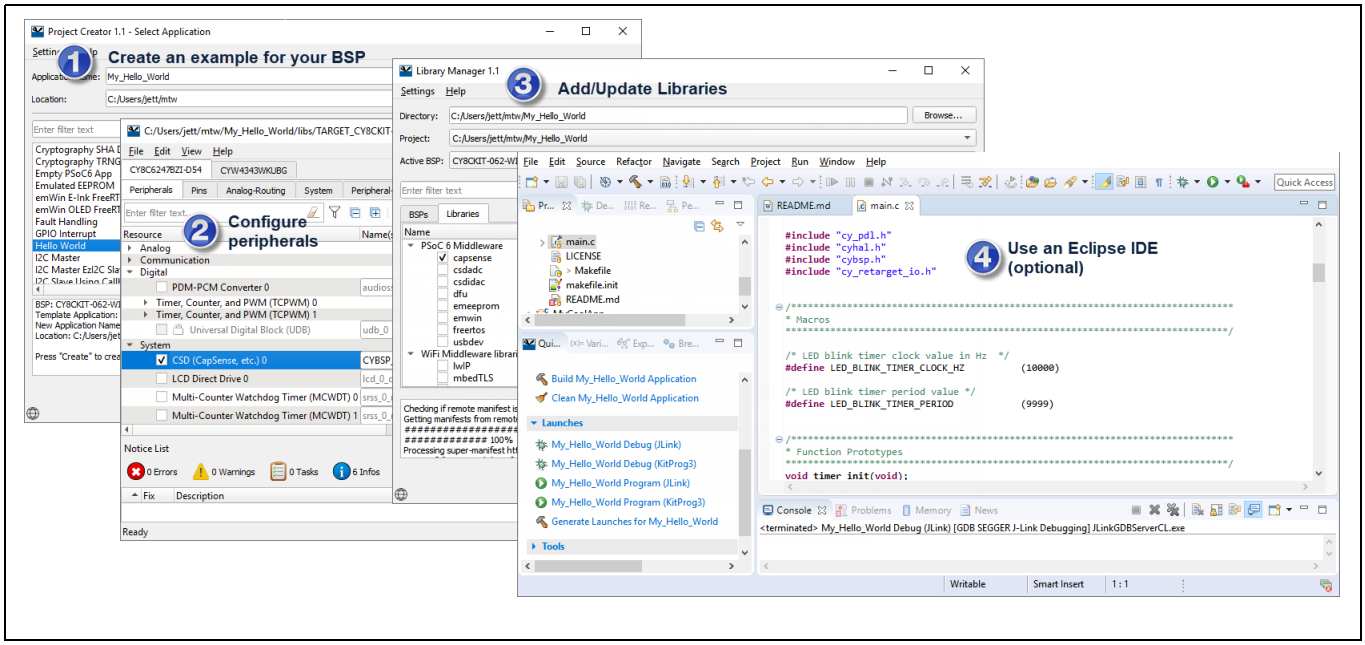

Figure 1 **ModusToolbox™ software tools**

Table of contents

General description **1**
Module description **1**
More information **4**
ModusToolbox™ software **5**
Table of contents **6**
1 Functional description **8**
1.1 CPU and memory subsystem 8
1.1.1 CPUs 8
1.1.2 Interrupts 9
1.1.3 InterProcessor Communication (IPC) 9
1.1.4 Direct memory access (DMA) controllers 10
1.1.5 Cryptography accelerator (Crypto) 10
1.1.6 Protection units 10
1.1.7 Memory 11
1.1.8 Boot code 11
1.1.9 Memory map 12
1.2 System resources 13
1.2.1 Power system 13
1.2.2 Power modes 13
1.2.3 Clock system 13
1.2.4 Internal main oscillator (IMO) 14
1.2.5 Internal low-speed oscillator (ILO) 14
1.2.6 External crystal oscillators 14
1.2.7 Watchdog timers (WDT, MCWDT) 15
1.2.8 Clock dividers 15
1.2.9 Trigger routing 15
1.2.10 Reset 15
1.3 Programmable analog subsystems 16
1.3.1 12-bit SAR ADC 16
1.3.2 Temperature sensor 16
1.3.3 Low-power comparators 16
1.4 Programmable digital 17
1.4.1 Smart I/O 17
1.5 Fixed-function digital 18
1.5.1 Timer/Counter/Pulse-width Modulator (TCPWM) 18
1.5.2 Serial Communication Blocks (SCB) 18
1.5.3 USB Full-Speed device interface 19
1.5.4 Quad-SPI/Serial Memory Interface (SMIF) 19
1.5.5 LCD 19
1.5.6 SD host controller 19
1.5.7 CAN FD block 20
1.6 GPIO 20
1.7 Special-function peripherals 21
1.7.1 CAPSENSE™ subsystem 21
1.8 PSoC™ 64 MCU security 25
1.9 Infineon bootloader 26
2 Module overview **28**
2.1 Module description 28
2.1.1 Module dimensions and drawing 28
3 Pad connection interface **30**
4 Recommended host PCB layout **31**

5 Digital and analog capabilities and connections 34
6 Power 40
6.1 32-kHz crystal oscillator 40
6.2 Critical components list 43
6.3 Antenna design 43
7 Electrical specification 44
7.1 Device-level specifications 44
7.1.1 Module level power consumption 50
7.1.2 XRES 52
7.1.3 GPIO 53
7.2 Analog peripherals 54
7.2.1 Opamp 54
7.2.2 SAR ADC 58
7.2.3 CSD 60
7.3 Digital peripherals 63
7.3.1 LCD specifications 65
7.4 Memory 66
7.5 System resources 67
7.5.1 SWD interface 68
7.5.2 Internal main oscillator 68
7.5.3 Internal low-speed oscillator 68
8 Environmental specifications 75
8.1 Environmental compliance 75
8.2 RF certification 75
8.3 Environmental conditions 75
8.4 ESD and EMI protection 75
9 Regulatory information 76
9.1 FCC 76
9.2 ISED 77
9.3 European Declaration of Conformity 78
9.4 MIC Japan 78
10 Packaging 79
11 Ordering information 81
11.1 Part numbering convention 81
12 Acronyms 82
13 Document conventions 86
13.1 Unit of measure 86
Revision history 87

1 Functional description

The following sections provide an overview of the features, capabilities and operation of each functional block. For more detailed information, refer to the following documentation:

- Board support package (BSP) documentation

  BSPs are available on **GitHub**. They are aligned with Infineon kits and provide files for basic device functionality such as hardware configuration files, startup code, and linker files. The BSP also includes other libraries that are required to support a kit. Each BSP has its own documentation, but typically includes an API reference such as the example **here**. This **search link** finds all currently available BSPs on the Infineon GitHub site.

- Hardware abstraction layer API reference manual

  The hardware abstraction layer (HAL) provides a high-level interface to configure and use hardware blocks on Infineon MCUs. It is a generic interface that can be used across multiple product families. You can leverage the HAL's simpler and more generic interface for most of an application, even if one portion requires finer-grained control. The **HAL API reference** provides complete details. Example applications that use the HAL download it automatically from the GitHub repository.

- Peripheral driver library (PDL) API reference manual

  The peripheral driver library (PDL) integrates device header files and peripheral drivers into a single package and supports all PSoC™ 6 MCU product lines. The drivers abstract the hardware functions into a set of easy-to-use APIs. These are fully documented in the **PDL API reference**. Example applications that use the PSoC™ 6 PDL download it automatically from the GitHub repository.

- Architecture technical reference manual (TRM)

  The architecture TRM provides a detailed description of each resource in the device. This is the next reference to use if it is necessary to understand the operation of the hardware below the software provided by PDL. It describes the architecture and functionality of each resource and explains the operation of each resource in all modes. It provides specific guidance regarding the use of associated registers.

- Register technical reference manual

  The register TRM provides a complete list of all registers in the device. It includes the breakdown of all register fields, their possible settings, read/write accessibility, and default states. All registers that have a reasonable use in typical applications have functions to access them from within PDL. Note that ModusToolbox and PDL may provide software default conditions for some registers that are different from and override the hardware defaults.

1.1 CPU and memory subsystem

PSoC™ 6 has multiple bus masters. They are: CPUs, DMA controllers, QSPI, USB, SD host controller, and a Crypto block. Generally, all memory and peripherals can be accessed and shared by all bus masters through multi-layer Arm® AMBA high-performance bus (AHB) arbitration. Accesses between CPUs can be synchronized using an inter-processor communication (IPC) block.

1.1.1 CPUs

There are two Arm® Cortex® CPUs:

The Cortex®-M4 (CM4) has single-cycle multiply, a floating-point unit (FPU), and a memory protection unit (MPU). It can run at up to 150 MHz. This is the main CPU, designed for a short interrupt response time, high code density, and high throughput.

CM4 implements a version of the Thumb instruction set based on Thumb-2 technology (defined in the ***Armv7-M Architecture Reference Manual***).

The Cortex®-M0+ (CM0+) has single-cycle multiply, and an MPU. It can run at up to 100 MHz; however, for CM4 speeds above 100 MHz, CM0+ and bus peripherals are limited to half the speed of CM4. Thus, for CM4 running at 150 MHz, CM0+ and peripherals are limited to 75 MHz.

In PSoC™ 64 MCU, the initial CM0+ frequency is set according to a provisioned security policy (see PSoC™ 64 security). The frequency ranges from 8 MHz to 50 MHz.

CM0+ is the secondary CPU; it is used to implement system calls and device-level security, safety, and protection features. CM0+ provides a secured, uninterruptible boot function. This helps ensure that post boot, system integrity is checked and memory and peripheral access privileges are enforced.

CM0+ implements the Armv6-M Thumb instruction set (defined in the ***Armv6-M Architecture Reference Manual***).

The CPUs have the following power draw, at V_{DDD} = 3.3 V and using the internal buck regulator:

Table 1 Active current slope at V_{DDD} = 3.3 V using the internal buck regulator

		System power mode	
		ULP	**LP**
CPU	Cortex®-M0+	15 µA/MHz	20 µA/MHz
	Cortex®-M4	22 µA/MHz	40 µA/MHz

The CPUs can be selectively placed in their Sleep and Deep Sleep power modes as defined by Arm®.

Both CPUs have nested vectored interrupt controllers (NVIC) for rapid and deterministic interrupt response, and wakeup interrupt controllers (WIC) for CPU wakeup from Deep Sleep power mode.

The CPUs have extensive debug support. PSoC™ 6 MCU has a debug access port (DAP) that acts as the interface for device programming and debug. An external programmer or debugger (the “host”) communicates with the DAP through the device serial wire debug (SWD) or Joint Test Action Group (JTAG) interface pins. Through the DAP (and subject to device security restrictions), the host can access the device memory and peripherals as well as the registers in both CPUs.

Each CPU offers debug and trace features as follows:

- CM4 supports six hardware breakpoints and four watchpoints, 4-bit embedded trace macrocell (ETM), serial wire viewer (SWV), and printf()-style debugging through the single wire output (SWO) pin.
- CM0+ supports four hardware breakpoints and two watchpoints, and a micro trace buffer (MTB) with 4-KB dedicated RAM.

PSoC™ 6 MCU also has an Embedded Cross Trigger for synchronized debugging and tracing of both CPUs.

1.1.2 Interrupts

This product line has 174 system and peripheral interrupt sources, and supports interrupts and system exceptions on both CPUs. CM4 has 174 interrupt request lines (IRQ), with the interrupt source ‘n’ directly connected to IRQn. CM0+ has eight interrupts IRQ[7:0] with configurable mapping of one or more interrupt sources to any of the IRQ[7:0]. CM0+ also supports eight internal (software only) interrupts.

Each interrupt supports configurable priority levels (eight levels for CM4 and four levels for CM0+). Up to four system interrupts can be mapped to each of the CPUs' non-maskable interrupts (NMI). Up to 39 interrupt sources are capable of waking the device from Deep Sleep power mode using the WIC. Refer to the technical reference manual for details.

1.1.3 InterProcessor Communication (IPC)

In addition to the Arm® SEV and WFE instructions, a hardware InterProcessor Communication (IPC) block is included. It includes 16 IPC channels and 16 IPC interrupt structures. The IPC channels can be used to implement data communication between the processors. Each IPC channel also implements a locking scheme which can be used to manage shared resources. The IPC interrupts let one processor interrupt the other, signaling an event. This is used to trigger events such as notify and release of the corresponding IPC channels. Some IPC channels and other resources are reserved, as **Table 2** shows:

Table 2 Distribution of IPC channels and other resources

Resources available	Resources consumed
IPC channels, 16 available	13 reserved
IPC interrupts, 16 available	13 reserved

Table 2 Distribution of IPC channels and other resources *(continued)*

Resources available	Resources consumed
Other interrupts	1 reserved
CM0+ NMI	Reserved
Other resources: clock dividers, DMA channels, etc.	4 CM0+ interrupt mux

1.1.4 Direct memory access (DMA) controllers

This product line has three DMA controllers, with 32, 29, and 2 channels, which support CPU-independent accesses to memory and peripherals. The descriptors for DMA channels can be in SRAM or flash. Therefore, the number of descriptors is limited only by the size of the memory. Each descriptor can transfer data in two nested loops with configurable address increments to the source and destination. The size of data transfer per descriptor varies based on the type of DMA channel. Refer to the technical reference manual for detail.

1.1.5 Cryptography accelerator (Crypto)

This subsystem consists of hardware implementation and acceleration of cryptographic functions and random number generators.

The Crypto subsystem supports the following:

- Encryption/decryption functions
  - Data Encryption Standard (DES)
  - Triple DES (3DES)
  - Advanced Encryption Standard (AES) (128-, 192-, 256-bit)
  - Elliptic Curve Cryptography (ECC)
  - RSA cryptography functions
- Hashing functions
  - Secure Hash Algorithm (SHA)
  - SHA-1
  - SHA-224/-256/-384/-512
- Message authentication functions (MAC)
  - Hashed message authentication code (HMAC)
  - Cipher-based message authentication code (CMAC)
- 32-bit cyclic redundancy code (CRC) generator
- Random number generators
  - Pseudo random number generator (PRNG)
  - True random number generator (TRNG)

1.1.6 Protection units

This product line has multiple types of protection units to control erroneous or unauthorized access to memory and peripheral registers. CM4 and CM0+ have Arm® MPUs for protection at the bus master level. Other bus masters use additional MPUs. Shared memory protection units (SMPUs) help implement protection for memory resources that are shared among multiple bus masters. Peripheral protection units (PPU) are similar to SMPUs but are designed for protecting the peripheral register space.

Protection units support memory and peripheral access attributes including address range, read/write, code/data, privilege level, secured/non-secured, and protection context.

Protection units are configured at boot to control access privileges and rights for bus masters and peripherals.

Up to eight protection contexts (boot is in protection context 0) allow access privileges for memory and system resources to be set by the boot process per protection context by bus master and code privilege level.

In PSoC™ 64 MCU, multiple protection contexts are used to isolate the different security levels within the device. The CM0+ makes use of several of them during the boot sequence, bootloading, system calls, etc. Protection context 6 is used for the user application code that runs on the CM4 CPU. The SMPUs are set up by default and cannot be modified by the user. See section 8 in the Architecture TRM for the protection context assignment. See section 8 in the Architecture TRM for the protection context assignment.

1.1.7 Memory

PSoC™ 6 MCU contains flash, SRAM, ROM, and eFuse memory blocks.

- Flash

  There is up to 512 KB of flash; however 128 KB is reserved for system usage, leaving 384 KB for applications. The 32-KB auxiliary flash (AUXflash) is also reserved, and is not available for applications.

  There are also two 32-KB flash sectors:
  - AUXflash
  - Supervisory flash (SFlash). Data stored in Sflash includes device trim values, **Flash boot** code, and encryption keys. After the device transitions into the “Secure” lifecycle stage, SFlash can no longer be changed.

  The flash uses 128-bit-wide accesses to reduce power. Write operations can be performed at the row level. A row is 512 bytes. Read operations are supported in both Low Power and Ultra-Low Power modes, however write operations may not be performed in Ultra-Low Power mode.

  The flash controller has two caches, one for each CPU. Each cache is 8 KB, with 4-way set associativity.

- SRAM

  Up to 256 KB of SRAM is provided, however, 80 KB is reserved for system usage, leaving 176 KB for applications.. Power control and retention granularity is implemented in 32-KB blocks allowing the user to control the amount of memory retained in Deep Sleep. Memory is not retained in Hibernate mode.

- ROM

  The 64-KB ROM, also referred to as the supervisory ROM (SROM), provides code (**ROM boot**) for several system functions. The ROM contains device initialization, flash write, security, eFuse programming, and other system-level routines. ROM code is executed only by the CM0+ CPU, in protection context 0. A system function can be initiated by either CPU, or through the DAP. This causes an NMI in CM0+, which causes CM0+ to execute the system function.

- eFuse

  A one-time-programmable (OTP) eFuse array consists of 1024 bits, all of which are reserved for system use. The bits are used for storing hash values, unique IDs, or other similar PSoC™ 64 MCU parameters.

  Each fuse is individually programmed; once programmed (or “blown”), its state cannot be changed. Blowing a fuse transitions it from the default state of 0 to 1. To program an eFuse, V_{DDIO0} must be at 2.5 V ±5%, at 14 mA.

  Because blowing an eFuse is an irreversible process, programming is recommended only in mass production under controlled factory conditions. For more information, see **PSoC™ 6 MCU Programming Specifications**.

1.1.8 Boot code

Two blocks of code, **ROM boot** and **Flash boot**, are pre-programmed into the device and work together to provide device startup and configuration, basic security features, life-cycle stage management and other system functions.

- ROM boot

  On a device reset, the boot code in ROM is the first code to execute. This code performs the following:
  - Integrity checks of flash boot code
  - Device trim setting (calibration)
  - Setting the device protection units
  - Setting device access restrictions for “Secure” lifecycle states

  ROM cannot be changed and acts as the root of trust in a secured system.

- Flash boot

  Flash boot is firmware stored in SFlash that ensures that only a validated application may run on the device. It also ensures that the firmware image has not been modified, such as by a malicious third party.

  Flash boot:
  - Is validated by ROM Boot
  - Runs after ROM Boot and before the user application
  - Enables system calls
  - Enables provisioning and device policy features
  - Implements RoT-based services for cryptography
  - Provides secured storage for keys and certificates
  - Validates and launches first image based on policies provisioned in the device

  If the user application cannot be validated, then flash boot ensures that the device is transitioned into a safe state. Refer to the **PSoC™ 64 MCU security** section for more details.

1.1.9 Memory map

Both CPUs have a fixed address map, with shared access to memory and peripherals. The 32-bit (4 GB) address space is divided into the Arm®-defined regions shown in **Table 3**. Note that code can be executed from the Code and External RAM regions.

Table 3. Address map for CM4 and CM0+

Address range	Name	Use
0x0000 0000 – 0x1FFF FFFF	Code	Program code region. Data can also be placed here. It includes the exception vector table, which starts at address 0.
0x2000 0000 – 0x3FFF FFFF	SRAM	Data region. This region is not supported in PSoC™ 6 MCU.
0x4000 0000 – 0x5FFF FFFF	Peripheral	All peripheral registers. Code cannot be executed from this region. CM4 bit-band in this region is not supported in PSoC™ 6 MCU.
0x6000 0000 – 0x9FFF FFFF	External RAM	SMIF or Quad SPI, (see the **Quad-SPI/Serial Memory Interface (SMIF)** section). Code can be executed from this region.
0xA000 0000 – 0xDFFF FFFF	External Device	Not used.
0xE000 0000 – 0xE00F FFFF	Private Peripheral Bus	Provides access to peripheral registers within the CPU core.
0xE010 0A000 – 0xFFFF FFFF	Device	Device-specific system registers.

The device memory map shown in **Table 4** applies to both CPUs. That is, the CPUs share access to all PSoC™ 6 MCU memory and peripheral registers.

Table 4 Internal memory address map for CM4 and CM0+

Address range	Memory type	Size
0x0000 0000 – 0x0000 FFFF	ROM	64 KB
0x0800 0000 – 0x0802 BFFF 0x0802 C000 - 0x0803 FFFF	Application SRAM System SRAM	Up to 176 KB 80 KB
0x1000 0000 – 0x1005 FFFF 0x1006 0000 - 0x1007 FFFF	Application flash Secured code flash Used for secured boot, secured bootloader, and system calls	Up to 384 KB 128 KB
0x1400 0000 – 0x1400 7FFF	Auxiliary flash, reserved for system use	32 KB
0x1600 0000 – 0x1600 7FFF	Supervisory flash, for secured access	32 KB

Note that PSoC™ 6 MCU SRAM is located in the Arm® Code region for both CPUs (see **Table 3**). There is no physical memory located in the CPUs' Arm® SRAM regions.

1.2 System resources

1.2.1 Power system

The power system provides assurance that voltage levels are as required for each respective mode and will either delay mode entry (on power-on reset (POR), for example) until voltage levels are as required for proper function or generate resets (brown-out detect (BOD)) when the power supply drops below specified levels. The design guarantees safe chip operation between power supply voltage dropping below specified levels (for example, below 1.7 V) and the reset occurring. There are no voltage sequencing requirements.

The V_{DDD} supply (1.7 to 3.6 V) powers an on-chip buck regulator or a low-dropout regulator (LDO), selectable by the user. In addition, both the buck and the LDO offer a selectable (0.9 or 1.1 V) core operating voltage (V_{CCD}). The selection lets users choose between two system power modes:

- System Low Power (LP) operates V_{CCD} at 1.1 V and offers high performance, with no restrictions on device configuration.
- System Ultra Low Power (ULP) operates V_{CCD} at 0.9 V for exceptional low power, but imposes limitations on clock speeds.

In addition, a backup domain adds an "always on" functionality using a separate power domain supplied by a backup supply (V_{BACKUP}) such as a battery or supercapacitor.

It includes a real-time clock (RTC) with alarm feature, supported by a 32.768-kHz watch crystal oscillator (WCO), and power-management IC (PMIC) control. Refer to **Power** for more details.

1.2.2 Power modes

PSoC™ 6 MCU can operate in four system and three CPU power modes. These modes are intended to minimize the average power consumption in an application. For more details on power modes and other power-saving configuration options, see the application note, **AN219528: PSoC™ 6 MCU Low-Power Modes and Power Reduction Techniques** and the **Architecture TRM, Power Modes chapter** (contact your local Infineon sales representative for the latest TRM).

Power modes supported by PSoC™ 6 MCUs, in order of decreasing power consumption, are:

- System Low Power (LP) – All peripherals and CPU power modes are available at maximum speed
- System Ultra Low Power (ULP) – All peripherals and CPU power modes are available, but with limited speed
- CPU Active – CPU is executing code in system LP or ULP mode
- CPU Sleep – CPU code execution is halted in system LP or ULP mode
- CPU Deep Sleep – CPU code execution is halted and system Deep Sleep is requested in system LP or ULP mode
- System Deep Sleep – Only low-frequency peripherals are available after both CPUs enter CPU Deep Sleep mode
- System Hibernate – Device and I/O states are frozen and the device resets on wakeup

CPU Active, Sleep, and Deep Sleep are standard Arm®-defined power modes supported by the Arm® CPU instruction set architecture (ISA). System LP, ULP, Deep Sleep and Hibernate modes are additional low-power modes supported by PSoC 6 MCU.

1.2.3 Clock system

Figure 2 shows that the clock system of this product line consists of the following:

- Internal main oscillator (IMO)
- Internal low-speed oscillator (ILO)
- Watch crystal oscillator (WCO)
- External MHz crystal oscillator (ECO)

- External clock input
- One phase locked-loop (PLL)
- One frequency-locked loop (FLL)

Clocks may be buffered and brought out to a pin on a Smart I/O port.

1.2.4 Internal main oscillator (IMO)

The IMO is the primary source of internal clocking. It is trimmed at the factory to achieve the specified accuracy. The IMO frequency is 8 MHz and tolerance is ± 2%.

The IMO can operate in system Deep Sleep mode to drive the LCD block for better contrast (and higher power) than is possible with the 32-kHz mode.

1.2.5 Internal low-speed oscillator (ILO)

The ILO is a very low power oscillator, nominally 32 kHz, which operates in all power modes. The ILO can be calibrated against a higher accuracy clock for better accuracy.

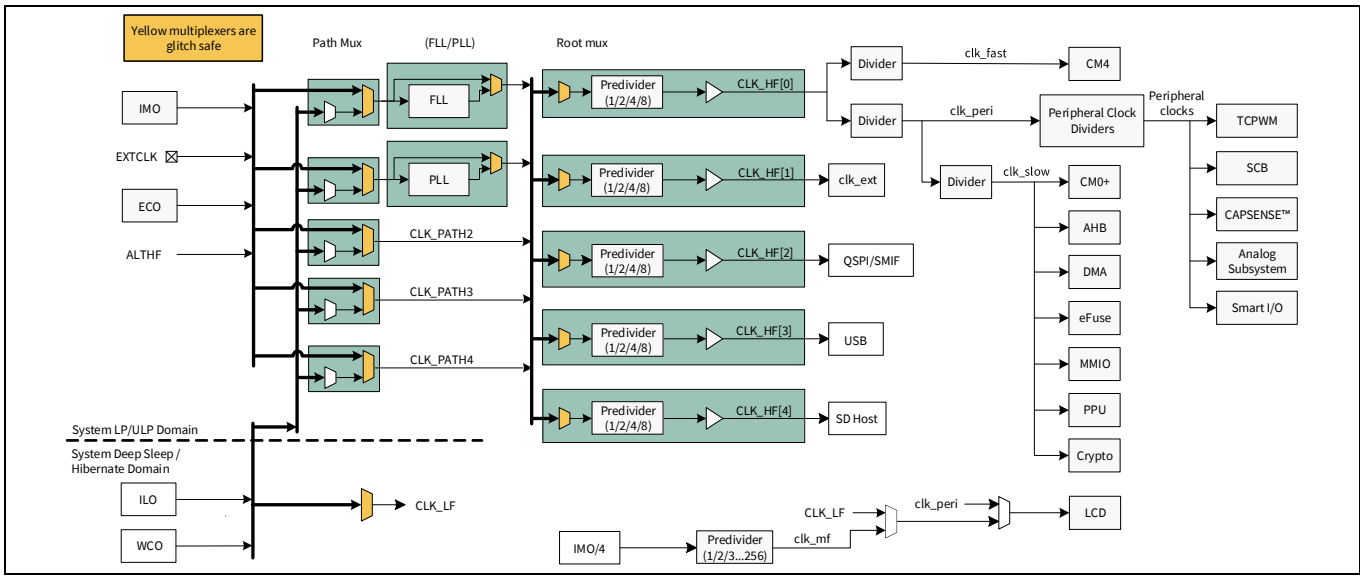

Figure 2 Clocking diagram

1.2.6 External crystal oscillators

Figure 3 shows all of the external crystal oscillator circuits for this product line. The component values shown are typical; check the crystal values, and the crystal datasheet for the load capacitor values. The ECO and WCO require balanced external load capacitors. For more information, see the TRM and **AN218241, PSoC™ 6 MCU hardware design considerations**.

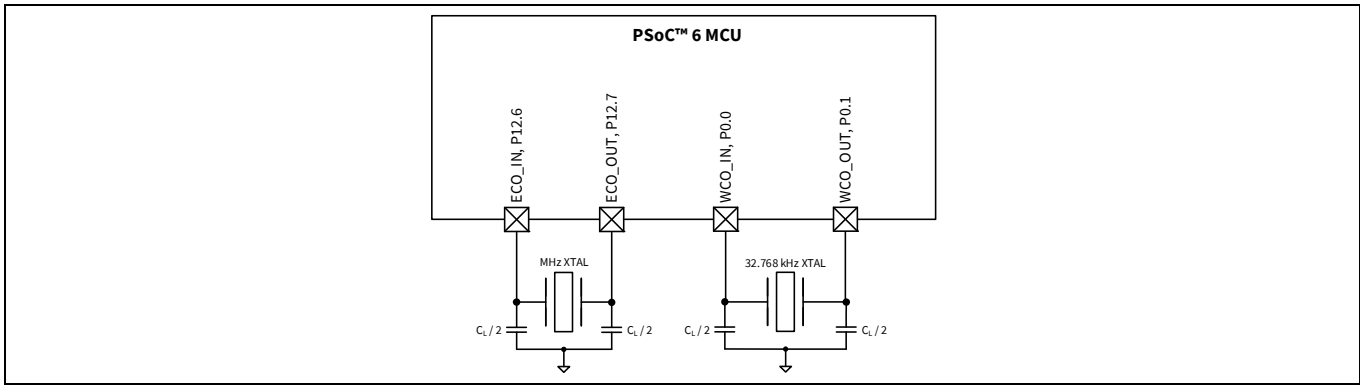

Figure 3 Oscillator circuits

If the ECO is used, note that its performance is affected by GPIO switching noise. GPIO ports should be used as **Table 5** shows. See also **Table 6** for additional restrictions for general analog subsystem use.

Table 5 ECO usage guidelines

Ports	Max frequency	Drive strength for $V_{DDD} \leq 2.7$ V	Drive strength for $V_{DDD} \leq 2.7$ V
Port 11	60 MHz for SMIF (QSPI)	DRIVE_SEL 2	DRIVE_SEL 3
Ports 12 and 13	Slow slew rate setting	No restrictions	No restrictions

1.2.7 Watchdog timers (WDT, MCWDT)

PSoC™ 6 MCU has one WDT and two multi-counter WDTs (MCWDT). The WDT has a 16-bit free-running counter. Each MCWDT has two 16-bit counters and one 32-bit counter, with multiple operating modes. All of the 16-bit counters can generate a watchdog device reset. All of the counters can generate an interrupt on a match event.

The WDT is clocked by the ILO. It can generate interrupt/wakeup in system LP/ULP, Deep Sleep, and Hibernate power modes. The MCWDTs are clocked by LFCLK (ILO or WCO). It can generate periodic interrupt/wakeup in system LP/ULP and Deep Sleep power modes.

1.2.8 Clock dividers

Integer and fractional clock dividers are provided for peripheral use and timing purposes. There are:

- Four 8-bit clock dividers
- Eight 16-bit integer clock dividers
- Two 16.5-bit fractional clock dividers
- One 24.5-bit fractional clock divider

1.2.9 Trigger routing

PSoC™ 6 MCU contains a trigger multiplexer block. This is a collection of digital multiplexers and switches that are used for routing trigger signals between peripheral blocks and between GPIOs and peripheral blocks.

There are two types of trigger routing. Trigger multiplexers have reconfigurability in the source and destination. There are also hardwired switches called “one-to-one triggers”, which connect a specific source to a destination. The user can enable or disable the route.

1.2.10 Reset

PSoC™ 6 MCU can be reset from a variety of sources:

- Power-on reset (POR) to hold the device in reset while the power supply ramps up to the level required for the device to function properly. POR activates automatically at power-up.
- Brown-out detect (BOD) reset to monitor the digital voltage supply V_{DDD} and generate a reset if V_{DDD} falls below the minimum required logic operating voltage.
- External reset dedicated pin (XRES) to reset the device using an external source. The XRES pin is active low. It can be connected either to a pull-up resistor to V_{DDD}, or to an active drive circuit, as **Figure 4** shows. If a pull-up resistor is used, select its value to minimize current draw when the pin is pulled low; 4.7 kΩ is typical.

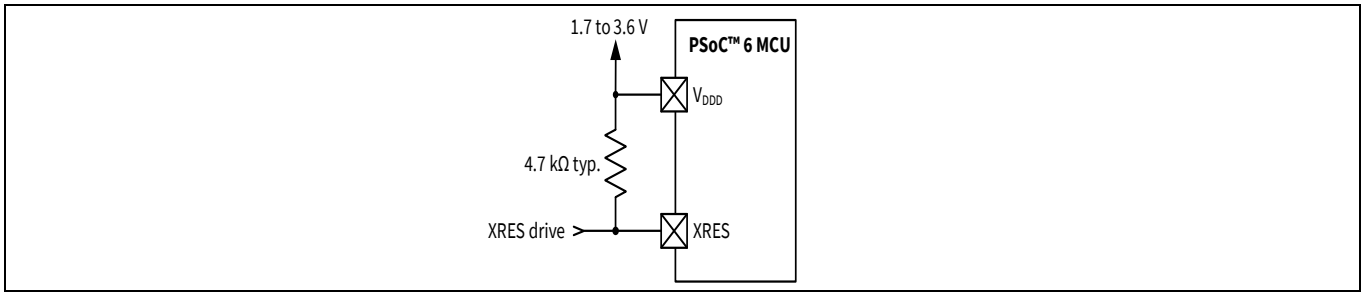

Figure 4 XRES connection diagram

- Watchdog timer (WDT or MCWDT) to reset the device if firmware fails to service it within a specified timeout period.
- Software-initiated reset to reset the device on demand using firmware.
- Logic-protection fault can trigger an interrupt or reset the device if unauthorized operating conditions occur; for example, reaching a debug breakpoint while executing privileged code.
- Hibernate wakeup reset to bring the device out of the system Hibernate power mode.

Reset events are asynchronous and guarantee reversion to a known state. Some of the reset sources are recorded in a register, which is retained through reset and allows software to determine the cause of the reset.

1.3 Programmable analog subsystems

1.3.1 12-bit SAR ADC

The 12-bit, 2-Msps SAR ADC can operate at a maximum clock rate of 36 MHz and requires a minimum of 18 clocks at that frequency to do a 12-bit conversion. One of three internal reference voltages may be used for the ADC reference voltage. The references are, V_{DD}, $V_{DD}/2$, and V_{REF} (nominally 1.2 V and trimmed to ±1%). An external reference may also be used, by either driving the VREF pin or routing an external reference to GPIO pin P9.3. These reference options allow ratio-metric readings or absolute readings at the accuracy of the reference used. The input range of the ADC is the full supply voltage between V_{SS} and V_{DDA}/V_{DDIOA}. The SAR ADC may be configured with a mix of single-ended and differential signals in the same configuration.

The SAR ADC's sample-and-hold (S/H) aperture is programmable to allow sufficient time for signals with a high impedance to settle sufficiently, if required. System performance is 65 dB for true 12-bit precision provided appropriate references are used and system noise levels permit it. To improve performance in noisy conditions, an external bypass capacitor for the internal reference amplifier (through the fixed "VREF" pin), may be added.

The SAR is connected to a fixed set of pins through an input multiplexer. The multiplexer cycles through the selected channels autonomously (sequencer scan) and does so with zero switching overhead (that is, the aggregate sampling bandwidth is equal to 2 Msps whether it is for a single channel or distributed over several channels). The result of each channel is buffered, so that an interrupt may be triggered only when a full scan of all channels is complete. Also, a pair of range registers can be set to detect and cause an interrupt if an input exceeds a minimum and/or maximum value. This allows fast detection of out-of-range values without having to wait for a sequencer scan to be completed and the CPU to read the values and check for out-of-range values in software. The SAR can also be connected, under firmware control, to most other GPIO pins via the Analog Multiplexer Bus (AMUXBUS). The SAR is not available in system Deep Sleep and Hibernate modes as it requires a high-speed clock (up to 36 MHz). The SAR operating range is 1.71 to 3.6 V.

1.3.2 Temperature sensor

An on-chip temperature sensor is part of the SAR and may be scanned by the SAR ADC. It consists of a diode, which is biased by a current source that can be disabled to save power. The temperature sensor may be connected directly to the SAR ADC as one of the measurement channels. The ADC digitizes the temperature sensor's output and a Infineon-supplied software function may be used to convert the reading to temperature which includes calibration and linearization.

1.3.3 Low-power comparators

Two low-power comparators are provided, which can operate in all power modes. This allows other analog system resources to be disabled while retaining the ability to monitor external voltage levels during system Deep Sleep and Hibernate modes. The comparator outputs are normally synchronized to avoid metastability unless operating in an asynchronous power mode (Hibernate) where the system wake-up circuit is activated by a comparator-switch event.

Figure 5 shows an overview of the analog subsystem. This diagram is a high-level abstraction. See the **TRM** for detailed connectivity information.

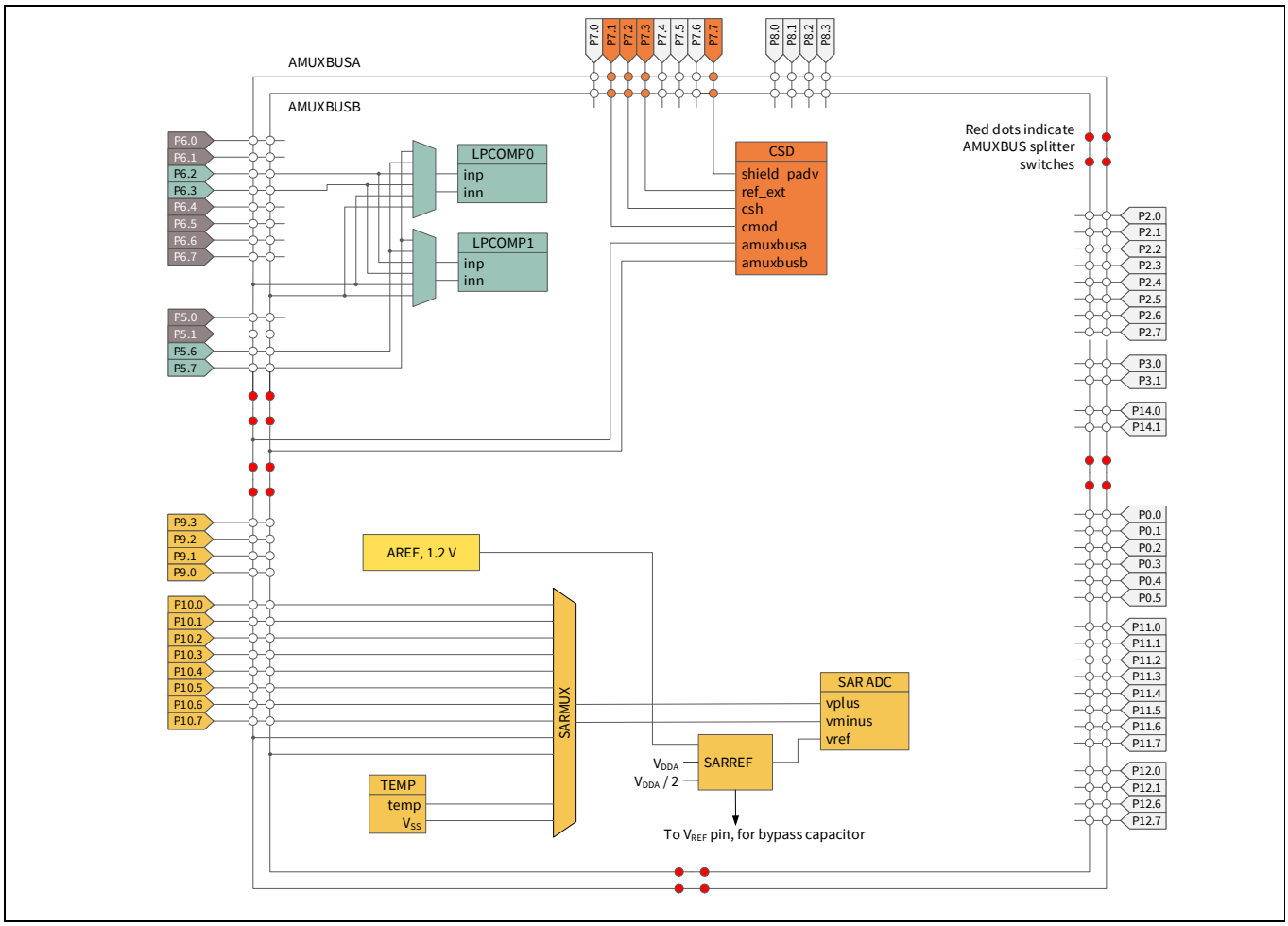

Figure 5 Analog subsystem

1.4 Programmable digital

1.4.1 Smart I/O

Smart I/O is a programmable logic fabric that enables Boolean operations on signals traveling from device internal resources to the GPIO pins or on signals traveling into the device from external sources. A Smart I/O block sits between the GPIO pins and the high-speed I/O matrix (HSIOM) and is dedicated to a single port.

There are two Smart I/O blocks: one on Port 8 and one on Port 9. When Smart I/O is not enabled, all signals on Port 8 and Port 9 bypass the Smart I/O hardware.

Smart I/O supports:

- System Deep Sleep operation
- Boolean operations without CPU intervention
- Asynchronous or synchronous (clocked) operation

Each Smart I/O block contains a data unit (DU) and eight lookup tables (LUTs).

The DU:

- Performs unique functions based on a selectable opcode.
- Can source input signals from internal resources, the GPIO port, or a value in the DU register.

Each LUT:

- Has three selectable input sources. The input signals may be sourced from another LUT, an internal resource, an external signal from a GPIO pin, or from the DU.

- Acts as a programmable Boolean logic table.
- Can be synchronous or asynchronous.

1.5 Fixed-function digital

1.5.1 Timer/Counter/Pulse-width Modulator (TCPWM)

- The TCPWM supports the following operational modes:
  - Timer-counter with compare
  - Timer-counter with capture
  - Quadrature decoding
  - Pulse width modulation (PWM)
  - Pseudo-random PWM
  - PWM with dead time
- Up, down, and up/down counting modes.
- Clock prescaling (division by 1, 2, 4, ... 64, 128)
- Double buffering of compare/capture and period values
- Underflow, overflow, and capture/compare output signals
- Supports interrupt on:
  - Terminal count – Depends on the mode; typically occurs on overflow or underflow
  - Capture/compare – The count is captured to the capture register or the counter value equals the value in the compare register
- Complementary output for PWMs
- Selectable start, reload, stop, count, and capture event signals for each TCPWM; with rising edge, falling edge, both edges, and level trigger options. The TCPWM has a Kill input to force outputs to a predetermined state.

In this device there are:

- Four 32-bit TCPWMs
- Eight 16-bit TCPWMs

1.5.2 Serial Communication Blocks (SCB)

This product line has seven SCBs:

- Six can implement either I^2C, UART, or SPI.
- One SCB (SCB #6) can operate in system Deep Sleep mode with an external clock; this SCB can be either SPI slave or I^2C slave.

I^2C mode: The SCB can implement a full multi-master and slave interface (it is capable of multimaster arbitration). This block can operate at speeds of up to 1 Mbps (Fast Mode Plus). It also supports EZI2C, which creates a mailbox address range and effectively reduces I^2C communication to reading from and writing to an array in memory. The SCB supports a 256-byte FIFO for receive and transmit.

The I^2C peripheral is compatible with I^2C standard-mode, Fast Mode, and Fast Mode Plus devices as defined in the NXP I^2C-bus specification and user manual (UM10204). The I^2C bus I/O is implemented with GPIO in open-drain modes.

UART mode: This is a full-feature UART operating at up to 8 Mbps. It supports automotive single-wire interface (LIN), infrared interface (IrDA), and SmartCard (ISO7816) protocols, all of which are minor variants of the basic UART protocol. In addition, it supports the 9-bit multiprocessor mode that allows the addressing of peripherals connected over common RX and TX lines. Common UART functions such as parity error, break detect, and frame error are supported. A 256-byte FIFO allows much greater CPU service latencies to be tolerated.

SPI mode: The SPI mode supports full Motorola SPI, TI Secure Simple Pairing (SSP) (essentially adds a start pulse that is used to synchronize SPI Codecs), and National Microwire (half-duplex form of SPI). The SPI block supports an EZSPI mode in which the data interchange is reduced to reading and writing an array in memory. The SPI interface operates with a 25-MHz clock.

1.5.3 USB Full-Speed device interface

This product line incorporates a full-speed USB device interface. The device can have up to eight endpoints. A 512-byte SRAM buffer is provided and DMA is supported.

1.5.4 Quad-SPI/Serial Memory Interface (SMIF)

A serial memory interface is provided, running at up to 80 MHz. It supports single, dual, and quad SPI configurations, and supports up to four external memory devices. It supports two modes of operation:

- Memory-mapped I/O (MMIO), a command mode interface that provides data access via registers and FIFOs
- Execute in Place (XIP), in which AHB reads and writes are directly translated to SPI read and write transfers.

In XIP mode, the external memory is mapped into the PSoC™ 6 MCU internal address space, enabling code execution directly from the external memory. To improve performance, a 4-KB cache is included. XIP mode also supports AES-128 on-the-fly encryption and decryption, enabling secured storage and access of code and data in the external memory.

1.5.5 LCD

This block drives LCD commons and segments; routing is available to most of the GPIOs. One to eight of the GPIOs must be used for commons, the rest can be used for segments.

The LCD block has two modes of operation: high speed (8 MHz) and low speed (32 kHz). Both modes operate in system LP, ULP, and Deep Sleep modes, however the low-speed mode operates with reduced contrast in system Deep Sleep mode. The 8-MHz IMO is available in system Deep Sleep mode, and can be used to generate a clock for the LCD block. Review the number of common and segment lines, viewing angle requirements, and prototype performance, and then select the appropriate LCD clock frequency before using system Deep Sleep mode.

1.5.6 SD host controller

This product line contains one Secure Digital (SD) host controller. It provides communication with IoT connectivity devices such as Bluetooth®, Bluetooth® Low Energy and WiFi radios, as well as combination devices. The controller also supports embedded MultiMediaCards (eMMC) and Secure Digital (SD) cards.

Several bus speed modes under the SD specification are supported:

- DS (default speed)
- HS (high speed)
- SDR12 (single data rate)
- SDR25
- SDR50
- DDR50 (double data rate)

For eMMC, the supported modes are:

- BWC (backward compatibility)
- SDR

Maximum clock restrictions and capacitive loads apply to some modes, and are also dependent on system power mode (LP/ULP).

The SD Host Controller complies with the following standards. Refer to the specifications documents for more information on the protocol and operations.

- SD Specifications Part 1 Physical Layer Specification Version 6.00, supporting card capacities for SDSC (up to 2 GB), SDHC (up to 32 GB) and SDXC (up to 2 TB).
- SD Specifications Part A2 SD Host Controller Standard Specification Version 4.20
- SD Specifications Part E1 SDIO Specifications Version 4.10
- Embedded Multi-Media Card (eMMC) Electrical Standard 5.1

The SD host controller is configured as a master. To be fully compatible with features provided in the driver software for speed and efficiency, it supports advanced DMA version 3 (ADMA3), defined by the SDIO standard, and has a 1 KB RX/TX FIFO allowing double buffering of 512-byte blocks.

1.5.7 CAN FD block

This product line has one CAN FD block for industrial and automotive applications. The block includes Time-Stamp support and has a 4-KB message RAM. FD Data rates of up to 5 Mbps are supported. DMA transfers are supported.

1.6 GPIO

This product line has up to 53 GPIOs, which implement the following:

- Eight drive strength modes:
  - Analog input mode (input and output buffers disabled)
  - Input only
  - Weak pull-up with strong pull-down
  - Strong pull-up with weak pull-down
  - Open drain with strong pull-down
  - Open drain with strong pull-up
  - Strong pull-up with strong pull-down
  - Weak pull-up with weak pull-down
- Input threshold select (CMOS or LVTTL)
- Hold mode for latching previous state (used for retaining the I/O state in system Hibernate mode)
- Selectable slew rates for dV/dt-related noise control to improve EMI

The pins are organized in logical entities called ports, which are up to 8 pins in width. Data output and pin state registers store, respectively, the values to be driven on the pins and the input states of the pins.

Every pin can generate an interrupt if enabled; each port has an interrupt request (IRQ) associated with it.

The port 3 pins are capable of overvoltage-tolerant (OVT) operation, where the input voltage may be higher than V_{DDD}. OVT pins are commonly used with I^2C, to allow powering the chip OFF while maintaining a physical connection to an operating I^2C bus without affecting its functionality.

GPIO pins can be ganged to source or sink higher values of current. GPIO pins, including OVT pins, may not be pulled up higher than the absolute maximum; see **Electrical specification**.

During power-on and reset, the pins are forced to the analog input drive mode, with input and output buffers disabled, so as not to crowbar any inputs and/or cause excess turn-on current.

A multiplexing network known as the high-speed I/O matrix (HSIOM) is used to multiplex between various peripheral and analog signals that may connect to an I/O pin.

Analog performance is affected by GPIO switching noise. In order to get the best analog performance, the following frequency and drive mode constraints must be applied. The DRIVE_SEL values (see **Table 6**) represent drive strengths (please see the **Architecture and Register TRMs** for further detail).

See also **Table 5** for additional restrictions for ECO use.

Table 6 DRIVE_SEL values

Ports	Max frequency	Drive strength for $V_{DDD} \leq 2.7$ V	Drive strength for $V_{DDD} > 2.7$ V
Ports 0, 1	8 MHz	DRIVE_SEL 2	DRIVE_SEL 3
Port 2	50 MHz	DRIVE_SEL 1	DRIVE_SEL 2
Ports 3 to 10	16 MHz; 25 MHz for SPI	DRIVE_SEL 2	DRIVE_SEL 3

Table 6 DRIVE_SEL values *(continued)*

Ports	Max frequency	Drive strength for $V_{DDD} \leq 2.7$ V	Drive strength for $V_{DDD} > 2.7$ V
Ports 11 to 12	80 MHz for SMIF (QSPI).	DRIVE_SEL 1	DRIVE_SEL 2
Ports 9 and 10	Slow slew rate setting for TQFP Packages for ADC performance	No restrictions	No restrictions

1.7 Special-function peripherals

1.7.1 CAPSENSE™ subsystem

CAPSENSE™ is supported in PSoC™ 6 MCU through a CAPSENSE™ sigma-delta (CSD) hardware block. It is designed for high-sensitivity self-capacitance and mutual-capacitance measurements, and is specifically built for user interface solutions.

In addition to CAPSENSE™, the CSD hardware block supports three general-purpose functions. These are available when CAPSENSE™ is not being used. Alternatively, two or more functions can be time-multiplexed in an application under firmware control. The four functions supported by the CSD hardware block are:

- CAPSENSE™
- 10-bit ADC
- Programmable current sources (IDAC)
- Comparator

1.7.1.1 CAPSENSE™

Capacitive touch sensors are designed for user interfaces that rely on human body capacitance to detect the presence of a finger on or near a sensor. CAPSENSE™ solutions bring elegant, reliable, and simple capacitive touch sensing functions to applications including IoT, industrial, automotive, and home appliances.

The Infineon-proprietary CAPSENSE™ technology offers the following features:

- Best-in-class signal-to-noise ratio (SNR) and robust sensing under harsh and noisy conditions
- Self-capacitance (CSD) and mutual-capacitance (CSX) sensing methods
- Support for various widgets, including buttons, matrix buttons, sliders, touchpads, and proximity sensors
- High-performance sensing across a variety of materials
- Best-in-class liquid tolerance
- SmartSense auto-tuning technology that helps avoid complex manual tuning processes
- Superior immunity against external noise
- Spread-spectrum clocks for low radiated emissions
- Gesture and built-in self-test libraries
- Ultra-low power consumption
- An integrated graphical CAPSENSE™ tuner for real-time tuning, testing, and debugging

1.7.1.2 ADC

The CAPSENSE™ subsystem slope ADC offers the following features:

- Selectable 8- or 10-bit resolution
- Selectable input range: GND to V_{REF} and GND to V_{DDA} on any GPIO input
- Measurement of V_{DDA} against an internal reference without the use of GPIO or external components

1.7.1.3 IDAC

The CSD block has two programmable current sources, which offer the following features:

- 7-bit resolution
- Sink and source current modes
- A current source programmable from 37.5 nA to 609 µA
- Two IDACs that can be used in parallel to form one 8-bit IDAC

1.7.1.4 Comparator

The CAPSENSE™ subsystem comparator operates in the system Low Power and Ultra-Low Power modes. The inverting input is connected to an internal programmable reference voltage and the non-inverting input can be connected to any GPIO via the AMUXBUS.

1.7.1.5 CAPSENSE™ hardware subsystem

Figure 6 shows the high-level hardware overview of the CAPSENSE™ subsystem, which includes a delta sigma converter, internal clock dividers, a shield driver, and two programmable current sources.

The inputs are managed through analog multiplexed buses (AMUXBUS A/B). The input and output of all functions offered by the CSD block can be provided on any GPIO or on a group of GPIOs under software control, with the exception of the comparator output and external capacitors that use dedicated GPIOs.

Self-capacitance is supported by the CSD block using AMUXBUS A, an external modulator capacitor, and a GPIO for each sensor. There is a shield electrode (optional) for self-capacitance sensing. This is supported using AMUXBUS B and an optional external shield tank capacitor (to increase the drive capability of the shield driver) should this be required. Mutual-capacitance is supported by the CSD block using AMUXBUS A, two external integrated capacitors, and a GPIO for transmit and receive electrodes.

The ADC does not require an external component. Any GPIO that can be connected to AMUXBUS A can be an input to the ADC under software control. The ADC can accept V_{DDA} as an input without needing GPIOs (for applications such as battery voltage measurement).

The two programmable current sources (IDACs) in general-purpose mode can be connected to AMUXBUS A or B. They can therefore connect to any GPIO pin. The comparator resides in the delta-sigma converter. The comparator inverting input can be connected to the reference. Both comparator inputs can be connected to any GPIO using AMUXBUS B; see **Figure 5**. The reference has a direct connection to a dedicated GPIO; see **Table 10**.

The CSD block can operate in active and sleep CPU power modes, and seamlessly transition between system LP and ULP modes. It can be powered down in system Deep Sleep and Hibernate modes. Upon wakeup from Hibernate mode, the CSD block requires re-initialization. However, operation can be resumed without re-initialization upon exit from Deep Sleep mode, under firmware control.

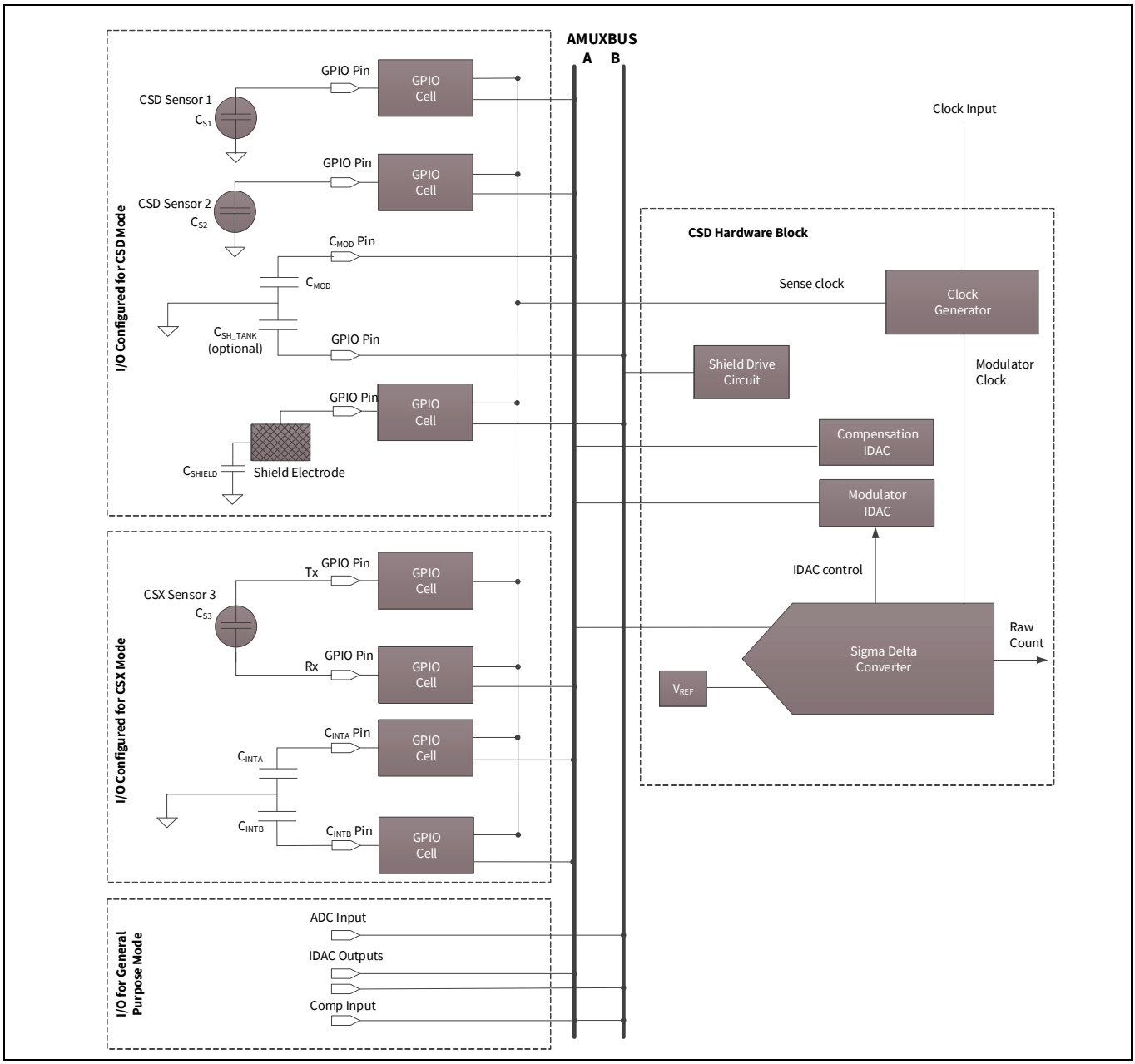

Figure 6 CAPSENSE™ hardware subsystem

Figure 7 shows the high-level software overview. Infineon provides middleware libraries for **CAPSENSE™**, **ADC**, and **IDAC** on GitHub to enable quick integration. The board support package for any kit with CAPSENSE™ capabilities automatically includes the CAPSENSE™ library in any application that uses the BSP.

User applications interact only with middleware to implement functions of the CSD block. The middleware interacts with underlying drivers to access hardware as necessary. The CSD driver facilitates time-multiplexing of the CSD hardware if more than one piece of CSD-related middleware is present in a project. It prevents access conflicts in this case.

ModusToolbox™ software provides a CAPSENSE™ configurator to enable fast library configuration. It also provides a tuner for performance evaluation and real-time tuning of the system. The tuner requires an EZI2C communication interface in the application to enable real-time tuning capability. The tuner can update configuration parameters directly in the device as well as in the configurator.

CAPSENSE™ and ADC middleware use the CSD interrupt to implement non-blocking sensing and A-to-D conversion. Therefore, interrupt service routines are a defined part of the middleware, which must be initialized by the application. Middleware and drivers can operate on either CPU. Infineon recommends using the middleware only in one CPU. If both CPUs must access the CSD driver, memory access should be managed in the application.

Refer to **AN85951: PSoC™ 4 and PSoC™ 6 MCU CAPSENSE design guide** for more details on CSX sensing, CSD sensing, shield electrode usage and its benefits, and capacitive system design guidelines.

Refer to the API reference guides for **CAPSENSE™**, **ADC**, and **IDAC** available on GitHub.

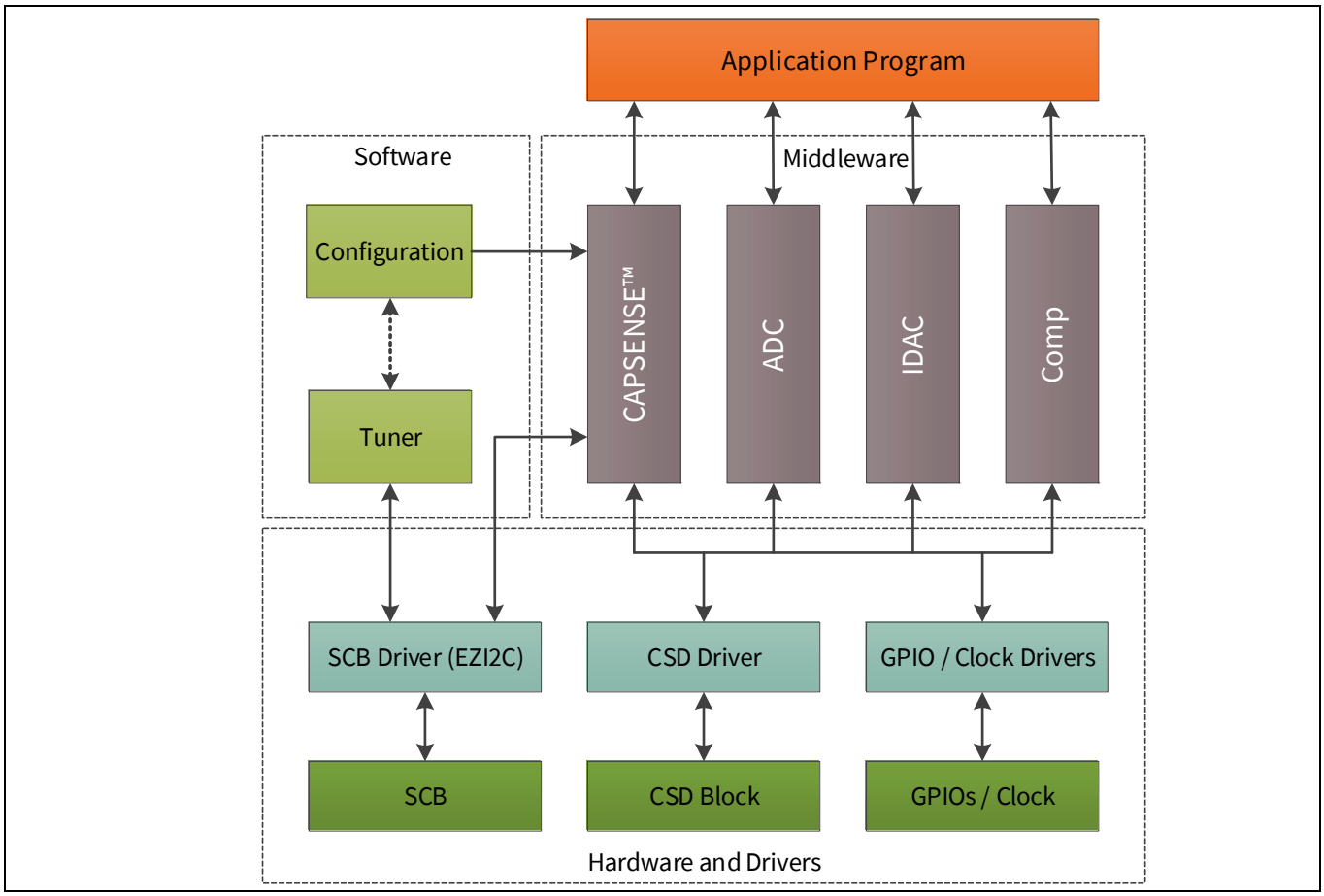

Figure 7 CAPSENSE™ software/firmware subsystem

1.8 PSoC™ 64 MCU security

All PSoC™ 64 "Secure" MCU product lines feature enhanced security functionality. They provide an isolated root of trust (RoT) with true attestation and provisioning services. Infineon also provides a "Secure Boot" SDK which includes all required libraries, tools, and sample code to provision PSoC™ 64 MCU devices. The SDK also provides provisioning scripts with sample keys and policies, a pre-built bootloader image, and tools for signing firmware images. For more information, see the **"Secure Boot" SDK User Guide**.

The "Secure Boot" SDK also includes entrance exam scripts. An entrance exam can optionally be run on PSoC™ 64 MCU devices before provisioning to ensure that no device tampering has occurred.

The first step in using a PSoC™ 64 MCU device is to inject the following information into the device - a process called provisioning:

- A set of cryptographic public keys, which are used to:
  - Transfer the RoT from Infineon to the user/OEM, as **Figure 8** shows
  - Validate applications
- A set of security policies that define how the device should behave
- Certificates (optional) used to bind device identity or provide a chain of trust to a higher certifying authority
- The Infineon bootloader

Provisioning is done before an application is programmed into the device.

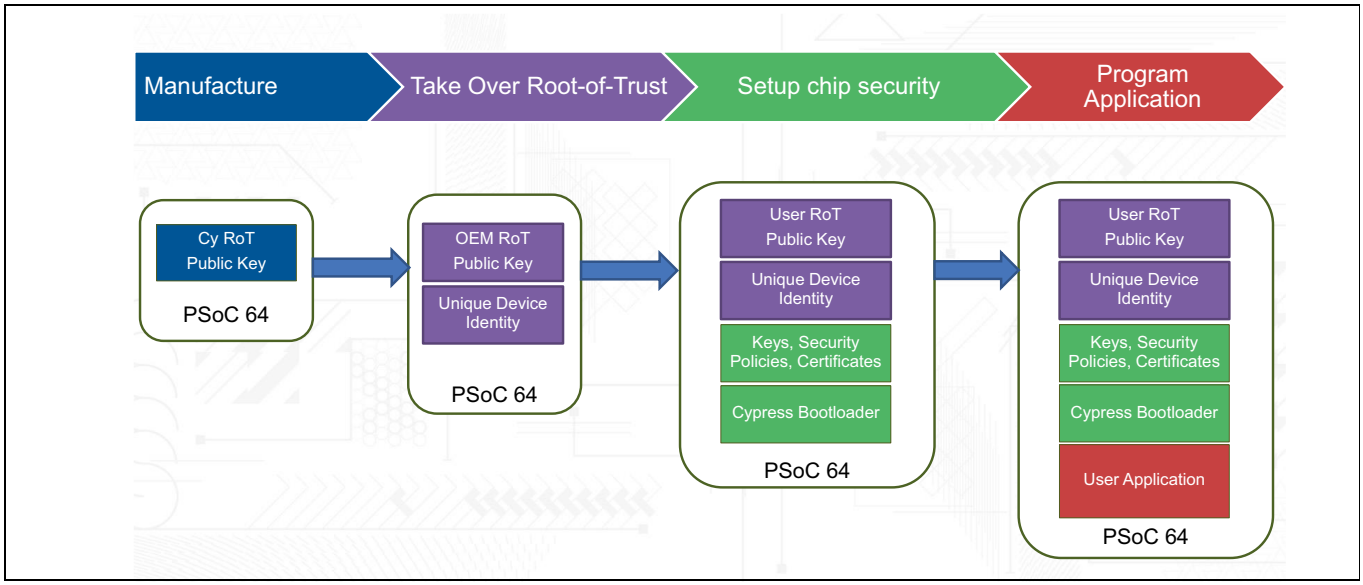

Figure 8 PSoC™ 64 MCU usage processes

Provisioning is done using a hardware security module (HSM). An HSM is a physical computing device, placed in a secured facility, that safeguards and manages digital keys for strong authentication, and provides cryptographic processing.

After the device is provisioned, it can be programmed with signed applications. The signature and authenticity of the application is verified before control is transferred to it.

Figure 9 shows a simplified flash memory map of PSoC™ 64 MCU assets and immutable sections. As noted in **Memory**, a portion of device SRAM is also reserved for system usage.

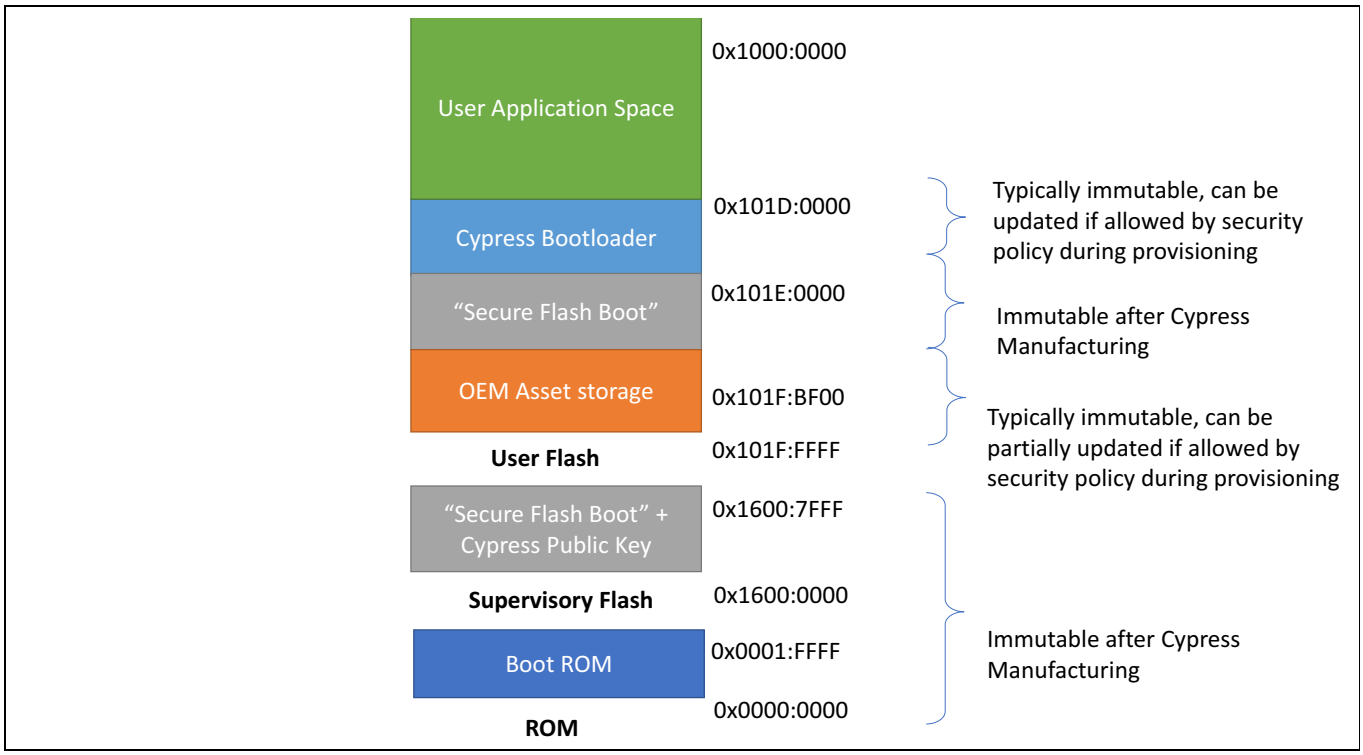

Figure 9 **PSoC™ 64 "Secure" MCU asset memory map**

1.9 Infineon bootloader

Infineon bootloader is a port of the open source **MCUBoot** library. For more details about this library, refer to **MCUBoot Bootloader design**. The current version of Infineon Bootloader for this device does not support the swap-based images feature as documented in the MCUBoot design document.

Infineon bootloader is included in the **"Secure Boot" SDK** as a pre-built hex image. This image acts as the first image launched by the PSoC™ 64 MCU boot code. It parses the provisioned Boot&Upgrade policy to launch an application image.

Infineon bootloader supports external memory over the PSoC™ 64 Serial Memory Interface (SMIF). The bootloader currently supports only external memory vendors who support the Serial Flash Discovery Protocol (SFDP).

Infineon bootloader enforces protection contexts for the bootloader code, so code running in another protection context cannot overwrite/tamper with the bootloader code. **Figure 10** shows the launch sequence of Infineon bootloader:

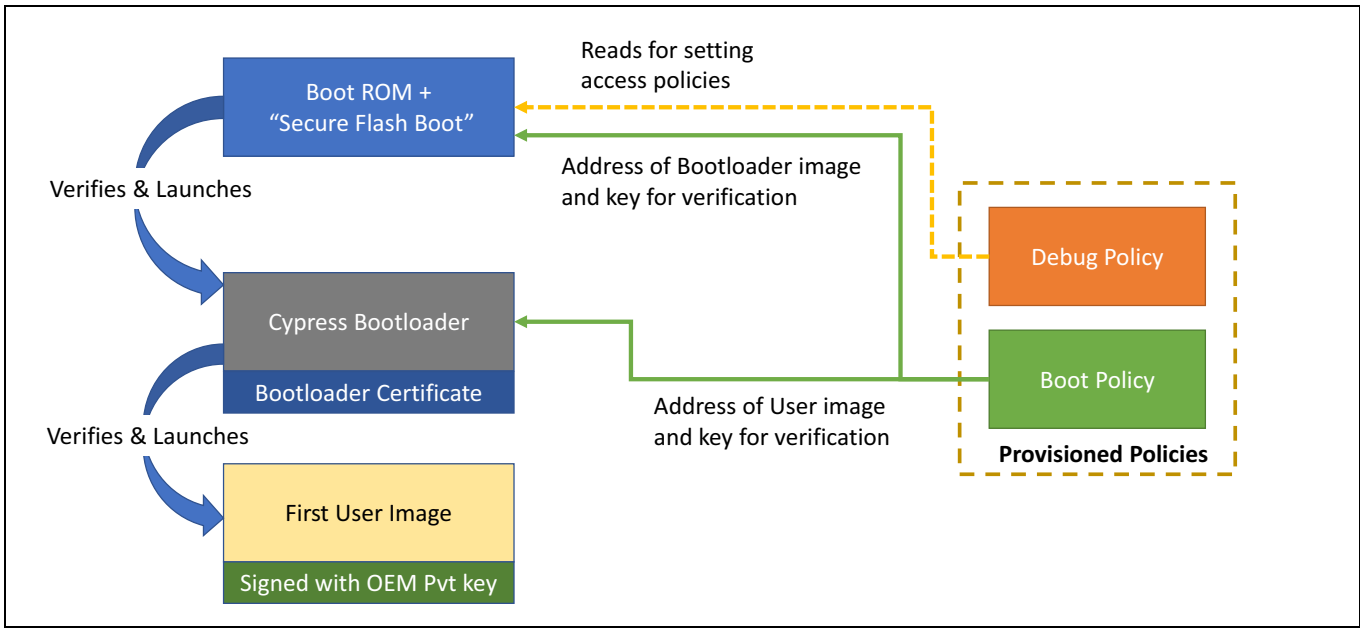

Figure 10 Bootloader launch sequence

Figure 11 shows a typical application update scenario using Infineon bootloader:

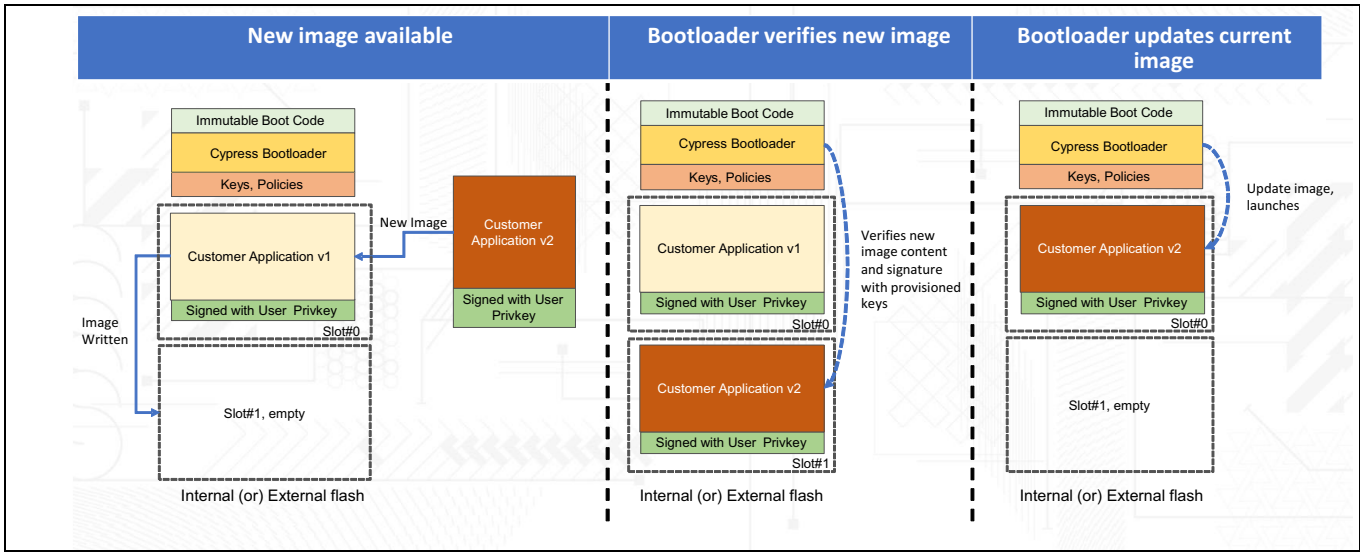

Figure 11 Bootloader application update sequence

2 Module overview

2.1 Module description

The CYBLE-416070-02 module is a complete module designed to be soldered to the main host board.

2.1.1 Module dimensions and drawing

Infineon reserves the right to select components (including the appropriate Bluetooth® LE device) from various vendors to achieve the Bluetooth® LE module functionality. Such selections will guarantee that all height restrictions of the component area are maintained. Designs should be completed with the physical dimensions shown in the mechanical drawings in **Figure 12**. All dimensions are in millimeters (mm).

Table 7 Module design dimension

Dimension item		Specification
Module dimensions	Length (X)	14.00 ± 0.15 mm
	Width (Y)	18.50 ± 0.15 mm
Antenna location dimensions	Length (X)	14.00 ± 0.15 mm
	Width (Y)	4.62 ± 0.15 mm
PCB thickness	Height (H)	0.80 ± 0.10 mm
Shield height	Height (H)	1.20 ± 0.10 mm
Maximum component height	Height (H)	1.20 mm typical (shield)
Total module thickness (bottom of module to highest component)	Height (H)	2.00 mm typical

See **Figure 12** for the mechanical reference drawing for CYBLE-416070-02.

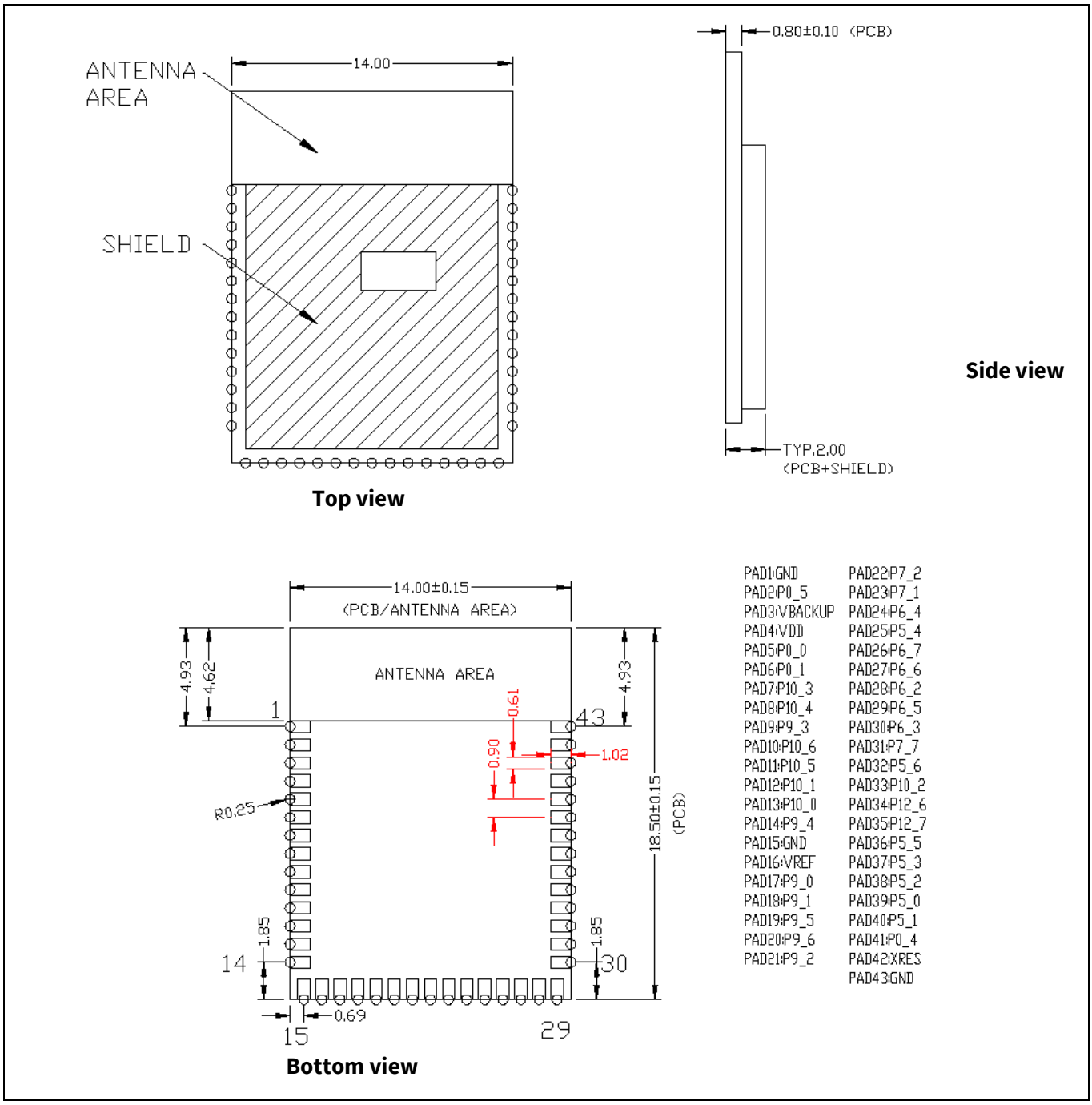

Figure 12 **Module mechanical drawing**[2]

Note

2. No metal should be located beneath or above the antenna area. Only bare PCB material should be located beneath the antenna area. For more information on recommended host PCB layout, see **Figure 14**, **Figure 15** and **Figure 16**, and **Figure 17** and **Table 9**.

3 Pad connection interface

As shown in the bottom view of **Figure 12**, the CYBLE-416070-02 connects to the host board via solder pads on the back of the module. **Table 8** and **Figure 13** detail the solder pad length, width, and pitch dimensions of the CYBLE-416070-02 module.

Table 8 Solder pad connection description

Name	Connections	Connection type	Pad length dimension	Pad width dimension	Pad pitch
SP	43	Solder pads	1.02 mm	0.61 mm	0.90 mm

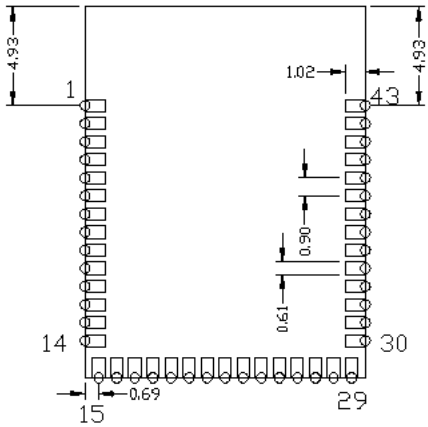

Figure 13 Solder pad dimensions

To maximize RF performance, the host layout should follow these recommendations:

1. The ideal placement of the Infineon Bluetooth® LE Module is in a corner of the host board with the antenna located on the edge of the host board. This placement minimizes the additional recommended keep-out area stated in item 2. Refer to **AN96841** for module placement best practices.
2. To maximize RF performance, the area immediately around the Infineon Bluetooth® LE Module trace antenna should contain an additional keep-out area, where no grounding or signal traces are contained. The keep-out area applies to all layers of the host board. The recommended dimensions of the host PCB keep-out area are shown in **Figure 14** (dimensions are in mm).

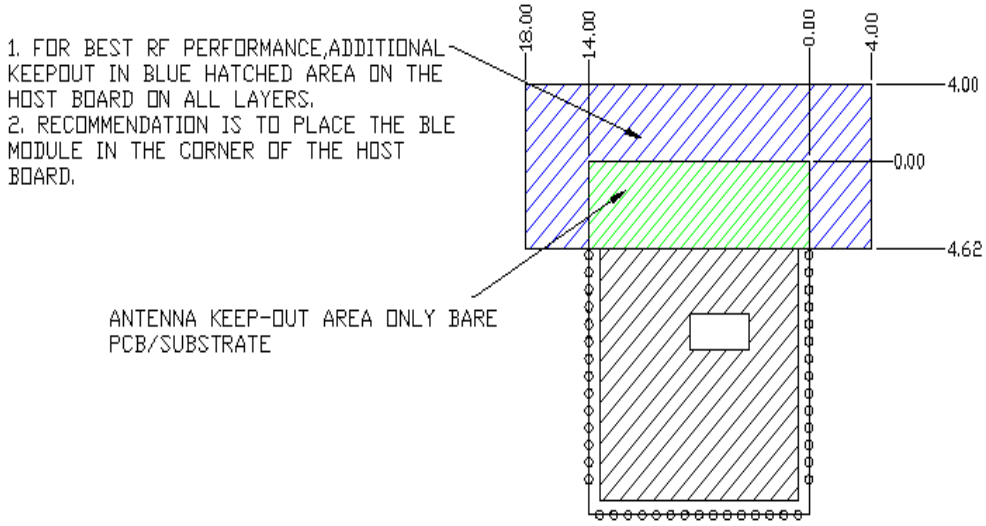

Host PCB keep-out area around trace antenna

Figure 14 Recommended host PCB keep-out area around the CYBLE-416070-02 trace antenna

4 Recommended host PCB layout

Figure 15 through **Figure 17** and **Table 9** provide details that can be used for the recommended host PCB layout pattern for the CYBLE-416070-02. Dimensions are in millimeters unless otherwise noted. Pad length of 0.99 mm (0.494 mm from center of the pad on either side) shown in **Figure 17** is the minimum recommended host pad length. The host PCB layout pattern can be completed using either **Figure 15**, **Figure 16**, or **Figure 17**. It is not necessary to use all figures to complete the host PCB layout pattern.

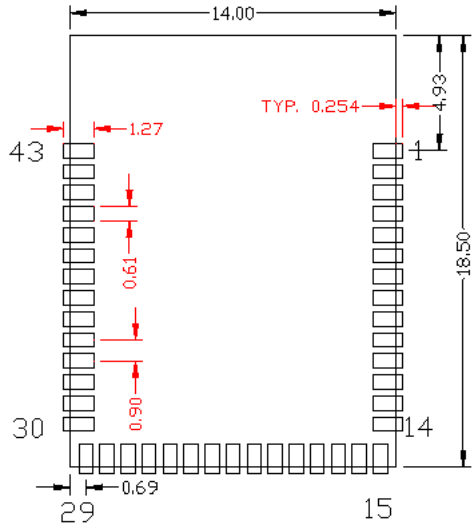

Top view

Figure 15 Host layout pattern for CYBLE-416070-02

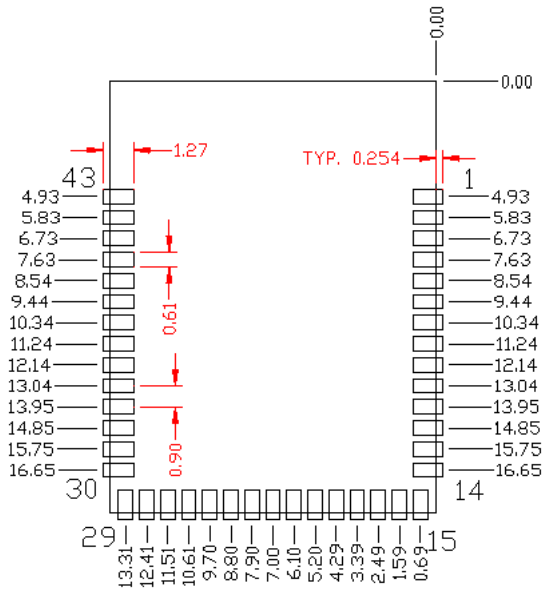

Top view

Figure 16 Module pad location from origin

Table 9 provides the center location for each solder pad on the CYBLE-416070-02. All dimensions reference the to the center of the solder pad. Refer to **Figure 17** for the location of each module solder pad.

Table 9 Module solder pad location

Solder pad (Center of pad)	Location (X,Y) from origin (mm)	Dimension from origin (mils)
1	(0.38, 4.93)	(14.96, 194.09)
2	(0.38, 5.83)	(14.96, 229.53)
3	(0.38, 6.73)	(14.96, 264.96)
4	(0.38, 7.63)	(14.96, 300.39)
5	(0.38, 8.54)	(14.96, 336.22)
6	(0.38, 9.44)	(14.96, 371.65)
7	(0.38, 10.34)	(14.96, 407.09)
8	(0.38, 11.24)	(14.96, 442.52)
9	(0.38, 12.14)	(14.96, 477.95)
10	(0.38, 13.04)	(14.96, 513.38)
11	(0.38, 13.95)	(14.96, 549.21)
12	(0.38, 14.85)	(14.96, 584.64)
13	(0.38, 15.75)	(14.96, 620.08)
14	(0.38, 16.65)	(14.96, 655.51)
15	(0.69, 18.12)	(27.17, 713.38)
16	(1.59, 18.12)	(62.60, 713.38)
17	(2.49, 18.12)	(98.03, 713.38)
18	(3.39, 18.12)	(133.46, 713.38)
19	(4.29, 18.12)	(168.90, 713.38)
20	(5.20, 18.12)	(204.72, 713.38)
21	(6.10, 18.12)	(240.16, 713.38)
22	(7.00, 18.12)	(275.59, 713.38)
23	(7.90, 18.12)	(311.02, 713.38)
24	(8.80, 18.12)	(346.46, 713.38)
25	(9.70, 18.12)	(381.89, 713.38)
26	(10.61, 18.12)	(417.72, 713.38)
27	(11.51, 18.12)	(453.15, 713.38)
28	(12.41, 18.12)	(488.58, 713.38)
29	(13.31, 18.12)	(524.01, 713.38)
30	(13.62, 16.65)	(536.22, 655.51)
31	(13.62, 15.75)	(536.22, 620.08)
32	(13.62, 14.85)	(536.22, 584.64)
33	(13.62, 13.95)	(536.22, 549.21)
34	(13.62, 13.04)	(536.22, 513.38)
35	(13.62, 12.14)	(536.22, 477.95)
36	(13.62, 11.24)	(536.22, 442.52)
37	(13.62, 10.34)	(536.22, 407.09)

Table 9 Module solder pad location *(continued)*

Solder pad (Center of pad)	Location (X,Y) from origin (mm)	Dimension from origin (mils)
38	(13.62, 9.44)	(536.22, 371.65)
39	(13.62, 8.54)	(536.22, 336.22)
40	(13.62, 7.63)	(536.22, 300.39)
41	(13.62, 6.73)	(536.22, 264.96)
42	(13.62, 5.83)	(536.22, 229.53)
43	(13.62, 4.93)	(536.22, 194.09)

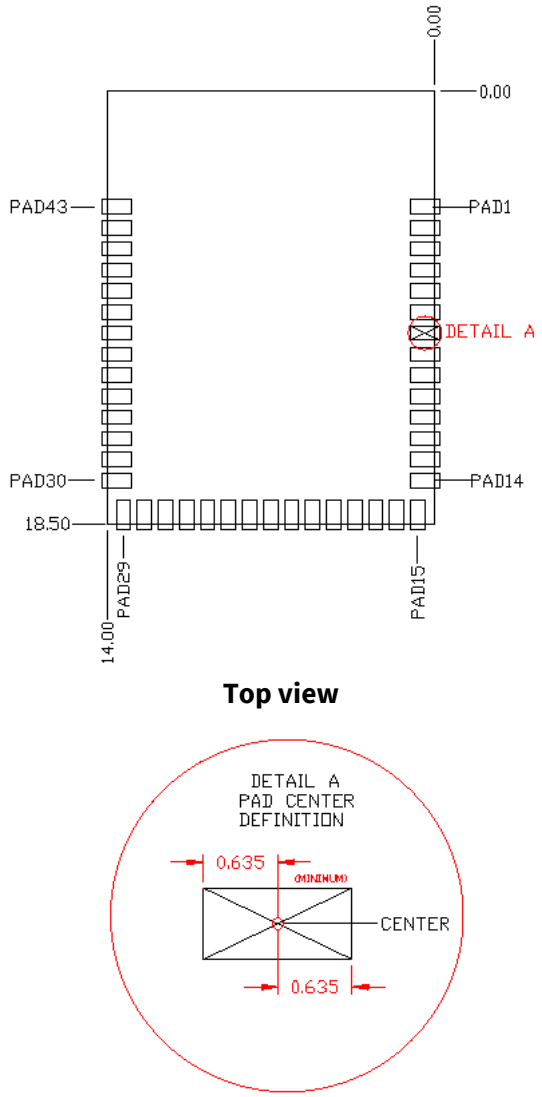

Figure 17 Solder pad reference location

5 Digital and analog capabilities and connections

Table 10 and **Table 11** detail the solder pad connection definitions and available functions for each connection pad. **Table 10** lists the solder pads on CYBLE-416070-02, the Bluetooth® LE device port-pin, and denotes whether the digital function shown is available for each solder pad. **Table 11** denotes whether the analog function shown is available for each solder pad. Each connection is configurable for a single option shown with a ✓.

Table 10 Digital peripheral capabilities

Pad number	Device port pin	UART	SPI	I²C	TCPWM [3, 4]	EXT_-CLK_IN	Audio	SWD/JTAG	GPIO
1	GND[5]	Ground connection							
2	P0.5	–	–	–	tcpwm[0].line_compl[2] tcpwm[1].line_compl[2]	✓	–	–	✓
3	V_{BACKUP}	Battery backup domain input voltage (1.71 V to 3.6 V)							
4	V_{DD}	Power supply input voltage (1.71 V to 3.6 V)							
5	P0.0	–	–	–	tcpwm[0].line[0] tcpwm[1].line[0]	✓	–	–	✓
6	P0.1	–	–	–	tcpwm[0].line_compl[0] tcpwm[1].line_compl[0]	–	–	✓(JTAG RST)	✓
7	P10.3	✓(scb1_CTS)	✓(scb1_SS0)	–	tcpwm[0].line_compl[7] tcpwm[1].line_compl[23]	–	–	–	✓
8	P10.4	–	✓(scb1_SS1)	–	tcpwm[0].line[0] tcpwm[1].line[0]	–	✓PDM_CLK	–	✓
9	P9.3	✓(scb2_CTS)	✓(scb2_SS0)	–	tcpwm[0].line_compl[5] tcpwm[1].line_compl[21]	–	–	–	✓
10	P10.6	–	✓(scb1_SS3)	–	tcpwm[0].line[1] tcpwm[1].line[2]	–	–	–	✓
11	P10.5	–	✓(scb1_SS2)	–	tcpwm[0].line_compl[0] tcpwm[1].line_compl[0]	–	✓PDM_DATA	–	✓
12	P10.1	✓(scb1_TX)	✓(scb1_MISO)	✓(scb1_SDA)	tcpwm[0].line_compl[6] tcpwm[1].line_compl[22]	–	–	–	✓

Notes

3. TCPWM stands for timer, counter, and PWM. If supported, the pad can be configured to any of these peripheral functions.
4. TCPWM connections on ports 0, 1, 2, and 3 can be routed through the Digital Signal Interconnect (DSI) to any of the TCPWM blocks and can be either positive or negative polarity.
5. The main board needs to connect both GND connections (Pad 1 and Pad 32) on the module to the common ground of the system.

Table 10 Digital peripheral capabilities *(continued)*

Pad number	Device port pin	UART	SPI	I²C	TCPWM [3, 4]	EXT_-CLK_IN	Audio	SWD/JTAG	GPIO
13	P10.0	✓(scb1_RX)	✓(scb1_MOSI)	✓(scb1_SCL)	tcpwm[0].line[6] tcpwm[1].line[22]	–	–	–	✓
14	P9.4	–	✓(scb2_SS1)	–	tcpwm[0].line[7] tcpwm[1].line[0]	–	–	–	✓
15	GND	Ground connection							
16	V_{REF}	Voltage reference input (Optional)							
17	P9.0	✓(scb2_RX)	✓(scb2_MOSI)	✓(scb2_SCL)	tcpwm[0].line[4] tcpwm[1].line[20]	–	–	–	✓
18	P9.1	✓(scb2_TX)	✓(scb2_MISO)	✓(scb2_SDA)	tcpwm[0].line_compl[4] tcpwm[1].line_compl[20]	–	–	–	✓
19	P9.5	–	✓(scb2_SS2)	–	tcpwm[0].line_compl[7] tcpwm[1].line_compl[0]	–	–	–	✓
20	P9.6	–	✓(scb2_SS3)	–	tcpwm[0].line[0] tcpwm[1].line[1]	–	–	–	✓
21	P9.2	✓(scb2_RTS)	✓(scb2_SCLK)	–	tcpwm[0].line[5] tcpwm[1].line[21]	–	–	–	✓
22	P7.2	–	–	–	tcpwm[0].line[5] tcpwm[1].line[13]	–	–	–	✓
23	P7.1	–	–	–	tcpwm[0].line_compl[4] tcpwm[1].line_compl[12]	–	–	–	✓
24	P6.4	✓(scb6_RX)	✓(scb6_MOSI) (scb8_MOSI)	✓(scb8_SCL) (scb6_SCL)	tcpwm[0].line[2] tcpwm[1].line[10]	–	–	✓(JTAG TDO)	✓

Notes

3. TCPWM stands for timer, counter, and PWM. If supported, the pad can be configured to any of these peripheral functions.
4. TCPWM connections on ports 0, 1, 2, and 3 can be routed through the Digital Signal Interconnect (DSI) to any of the TCPWM blocks and can be either positive or negative polarity.
5. The main board needs to connect both GND connections (Pad 1 and Pad 32) on the module to the common ground of the system.

Table 10 Digital peripheral capabilities *(continued)*

Pad number	Device port pin	UART	SPI	I²C	TCPWM [3, 4]	EXT_-CLK_IN	Audio	SWD/JTAG	GPIO
25	P5.4	–	✓(scb5_SS1)	–	tcpwm[0].line[6] tcpwm[1].line[6]	–	✓I²S_SCK_RX	–	✓
26	P6.7	✓(scb6_CTS)	✓(scb6_SS0) (scb8_SS0)	–	tcpwm[0].line_compl[3] tcpwm[1].line_compl[11	–	–	✓(SWDCLK) (JTAG TCLK)	✓
27	P6.6	✓(scb6_RTS)	✓(scb6_SCLK) (scb8_SCLK)	–	tcpwm[0].line[3] tcpwm[1].line[11]	–	–	✓(SWDIO) (JTAG TMS)	✓
28	P6.2		✓(scb8_SCLK)	–	tcpwm[0].line[1] tcpwm[1].line[9]	–	–	–	✓
29	P6.5	✓(scb6_TX)	✓(scb6_MISO) (scb8_MISO)	✓(scb8_SDA) ✓(scb6_SDA)	tcpwm[0].line_compl[2] tcpwm[1].line_compl[10]	–	–	✓(JTAG TDI)	✓
30	P6.3	–	✓(scb8_SS0)	–	tcpwm[0].line_compl[1] tcpwm[1].line_compl[9]	–	–	–	✓
31	P7.7	–	–	–	tcpwm[0].line_compl[7] tcpwm[1].line_compl[15]	–	–	–	✓
32	P5.6	–	✓(scb5_SS3)	–	tcpwm[0].line[7] tcpwm[1].line[7]	–	✓I²S_SDI_RX	–	✓
33	P10.2	✓(scb1_RTS)	✓(scb1_SCLK)	–	tcpwm[0].line[7] tcpwm[1].line[23]	–	–	–	✓
34	P12.6	–	✓(scb6_SS3)	–	tcpwm[0].line[7] tcpwm[1].line[7]	–	–	–	✓

Notes

3. TCPWM stands for timer, counter, and PWM. If supported, the pad can be configured to any of these peripheral functions.
4. TCPWM connections on ports 0, 1, 2, and 3 can be routed through the Digital Signal Interconnect (DSI) to any of the TCPWM blocks and can be either positive or negative polarity.
5. The main board needs to connect both GND connections (Pad 1 and Pad 32) on the module to the common ground of the system.

Table 10 Digital peripheral capabilities *(continued)*

Pad number	Device port pin	UART	SPI	I²C	TCPWM [3, 4]	EXT_-CLK_IN	Audio	SWD/JTAG	GPIO
35	P12.7	–	–	–	tcpwm[0].line_compl[7] tcpwm[1].line_compl[7]	–	–	–	✓
36	P5.5	–	✓(scb5_SS2)	–	tcpwm[0].line_compl[6] tcpwm[1].line_compl[6]	–	✓I²S_WS_RX	–	✓
37	P5.3	✓(scb5_CTS)	✓(scb5_SS0)	–	cpwm[0].line_compl[5] tcpwm[1].line_compl[5]	–	✓I²S_SDO_TX	–	✓
38	P5.2	✓(scb5_RTS)	✓(scb5_SCLK)	–	tcpwm[0].line[5] tcpwm[1].line[5]	–	✓I2S_WS_TX	–	✓
39	P5.0	✓(scb5_RX)	✓(scb5_MOSI)	✓(scb5_SCL)	tcpwm[0].line[4] tcpwm[1].line[4]	–	✓I2S_EXT_CLK	–	✓
40	P5.1	✓(scb5_TX)	✓(scb5_MISO)	✓(scb5_SDA)	tcpwm[0].line_compl[4] tcpwm[1].line_compl[4]	–	✓I2S_CLK_TX	–	✓
41	P0.4	–	–	–	tcpwm[0].line[2] tcpwm[1].line[2]	–	–	–	✓
42	XRES	External reset (Active Low)							
43	GND[5]	Ground connection							

Notes

3. TCPWM stands for timer, counter, and PWM. If supported, the pad can be configured to any of these peripheral functions.
4. TCPWM connections on ports 0, 1, 2, and 3 can be routed through the Digital Signal Interconnect (DSI) to any of the TCPWM blocks and can be either positive or negative polarity.
5. The main board needs to connect both GND connections (Pad 1 and Pad 32) on the module to the common ground of the system.

Table 11 Additional analog and digital capabilities

Pad number	Device port pin	Analog functionality	Universal digital block (UDB)	CAPSENSE™	Smart IO
1	GND	Ground connection			
2	P0.5	–	✓	✓	–
3	V_{BACKUP}	Battery backup domain input voltage (1.71 V to 3.6 V)			
4	VDD	Power supply input voltage (1.71 V to 3.6 V)			
5	P0.0	wco_in	✓	✓	–
6	P0.1	wco_out	✓	✓	–
7	P10.3	sarmux[3]	✓	✓	–
8	P10.4	sarmux[4]	✓	✓	–
9	P9.3	ctb_oa1_out	✓	✓	SMARTIO10[3]
10	P10.6	sarmux[6]	✓	✓	–
11	P10.5	sarmux[5]	✓	✓	–
12	P10.1	sarmux[1]	✓	✓	–
13	P10.0	sarmux[0]	✓	✓	–
14	P9.4	ctb_oa1-	✓	✓	SMARTIO9[4]
15	GND	Ground connection			
16	V_{REF}	Reference voltage input (Optional)			
17	P9.0	ctb_oa0+	✓	✓	SMARTIO9[0]
18	P9.1	ctb_oa0-	✓	✓	SMARTIO9[1]
19	P9.5	ctb_oa1+	✓	✓	SMARTIO9[5]
20	P9.6	ctb_oa0+	✓	✓	SMARTIO9[6]
21	P9.2	ctb_oa0_out	✓	✓	SMARTIO9[2]
22	P7.2	csd.csh_tankpadd csd.csh_tankpads	✓	✓	–
23	P7.1	csd.cmodpadd csd.cmodpads	✓	✓	–
24	P6.4	–	✓	✓	–
25	P5.4	–	✓	✓	–
26	P6.7	–	✓	✓	–
27	P6.6	–	✓	✓	–
28	P6.2	lpcomp.inp_comp1	✓	✓	–
29	P6.5		✓	✓	–
30	P6.3	lpcomp.inn_comp1	✓	✓	–
31	P7.7	csd.cshieldpads	✓	✓	–
32	P5.6	lpcomp.inp_comp0	✓	✓	–
33	P10.2	sarmux[2]	✓	✓	–
34	P12.6	–	✓	✓	–
35	P12.7	–	✓	✓	–
36	P5.5	–	✓	✓	–
37	P5.3	–			–

Table 11 Additional analog and digital capabilities *(continued)*

Pad number	Device port pin	Analog functionality	Universal digital block (UDB)	CAPSENSE™	Smart IO
38	P5.2	–	✓	✓	–
39	P5.0	–	✓	✓	–
40	P5.1	–	✓	✓	–
41	P0.4	–	✓	✓	–
42	XRES	External reset (Active Low)			
43	GND	Ground connection			

6 Power

The power connection diagram (see **Figure 18**) shows the general requirements for power pins on the CYBLE-416070-02. The CYBLE-416070-02 contains a single power supply connection (V_{DD}) and a backup voltage input (V_{BACKUP}).

Description of the power pins is as follows:

- V_{BACKUP} is the supply to the backup domain. The backup domain includes the 32-kHz WCO, real-time clock (RTC), and backup registers. It can generate a wakeup interrupt to the chip via the RTC timers or an external input. It can also generate an output to wakeup external circuitry. It is connected to VDD when not used as a separate battery backup domain. V_{BACKUP} provides the supply for Port 0.
- V_{DD} is the main power supply input (1.71 V to 3.6 V). It provides the power input to the digital, analog, and radio domains. Isolation required for these domains is integrated on-module; therefore, no additional isolation is required for the CYBLE-416070-02.

The supply voltage range is 1.71 to 3.6 V with all functions and circuits operating over that range. All ground connections specified must be connected to system ground.

V_{DD} and V_{BACKUP} may be shorted together externally. They are not required to be separate input voltages.

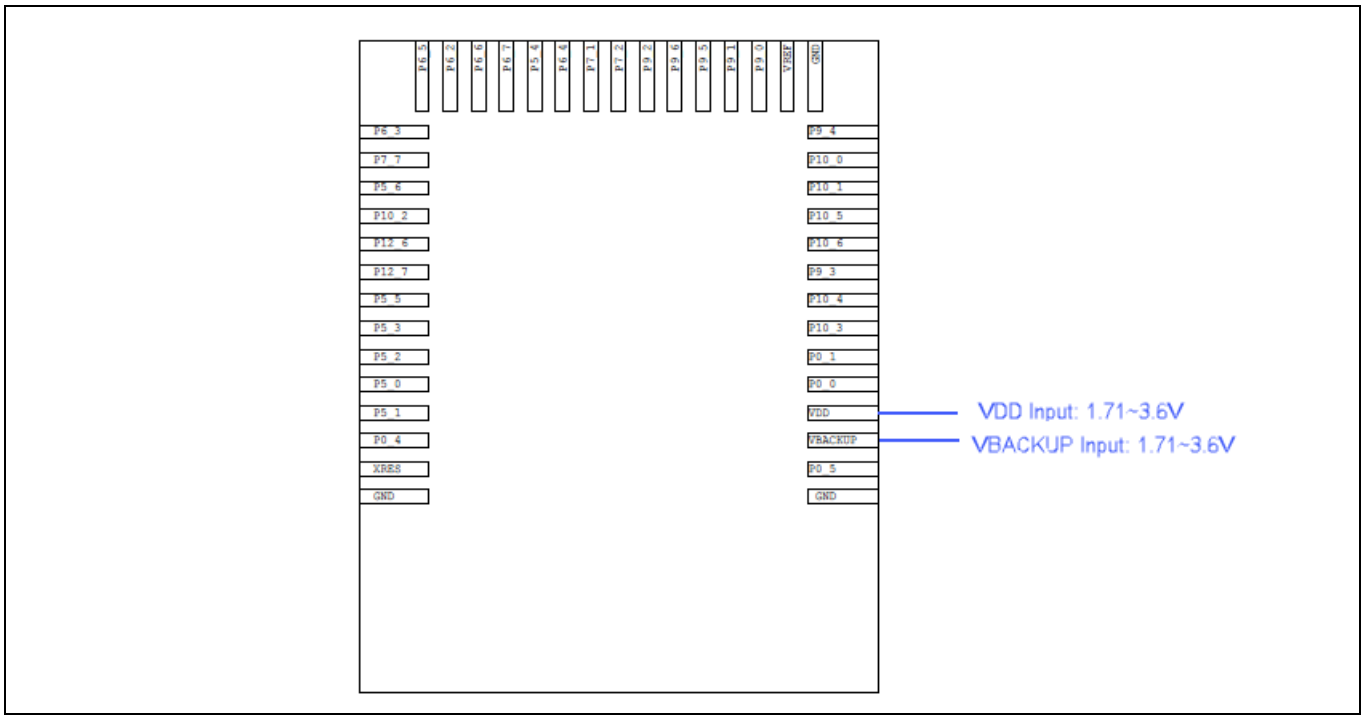

Figure 18 CYBLE-416070-02 power connections

6.1 32-kHz crystal oscillator

The CYBLE-416070-02 includes connections for a 32-kHz oscillator to provide accurate timing during low-power operations. **Figure 19** shows the 32-kHz XTAL oscillator with external components and **Table 12** lists the oscillators characteristics. This oscillator can be operated with a 32-kHz or 32.768-kHz crystal oscillator, or be driven with a clock input at similar frequency. The XTAL must have an accuracy of ±250 ppm or better according to the Bluetooth® LE specification over temperature and including aging. The values for C1 and C2 are used to fine-tune the oscillator. The external 32-kHz XTAL is optional, and the precision internal low-speed oscillator (PILO) can be used if precise timing is not required. Precise timing will improve overall system power consumption, as shown in **Table 17**.

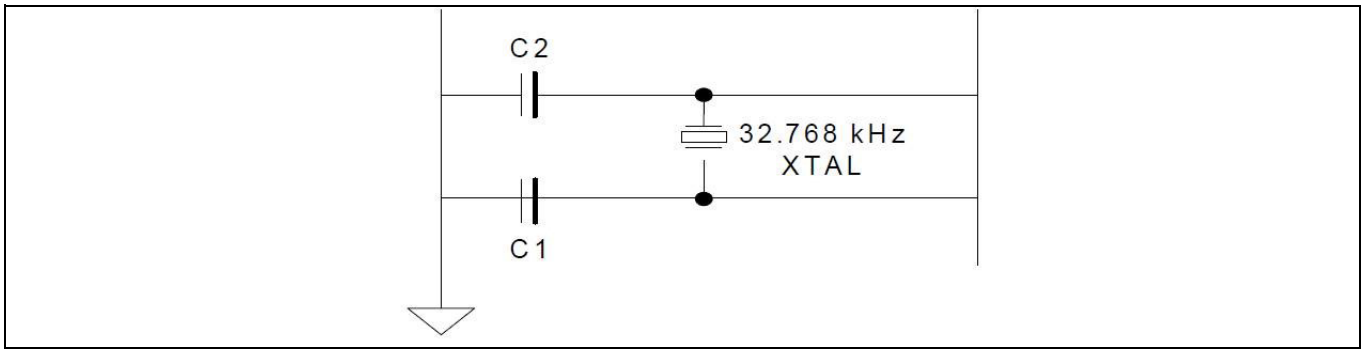

Figure 19 32-kHz oscillator block diagram

Table 12 XTAL oscillator characteristics

Parameter	Description	Minimum	Typical	Maximum	Unit	Details/conditions
F_{WCO}	Crystal frequency	–	32.768	–	kHz	
F_{TOL}	Frequency tolerance	–	50	–	ppm	
ESR	Equivalent series resistance	–	70	–	kΩ	
PD	Drive level	–	–	1	µW	
T_{START}	Startup time	–	–	500	ms	
C_L	Crystal load capacitance	6	–	12.5	pF	
C_0	Crystal shunt capacitance	–	1.35	–	pF	

The CYBLE-416070-02 schematic is shown in **Figure 20**.

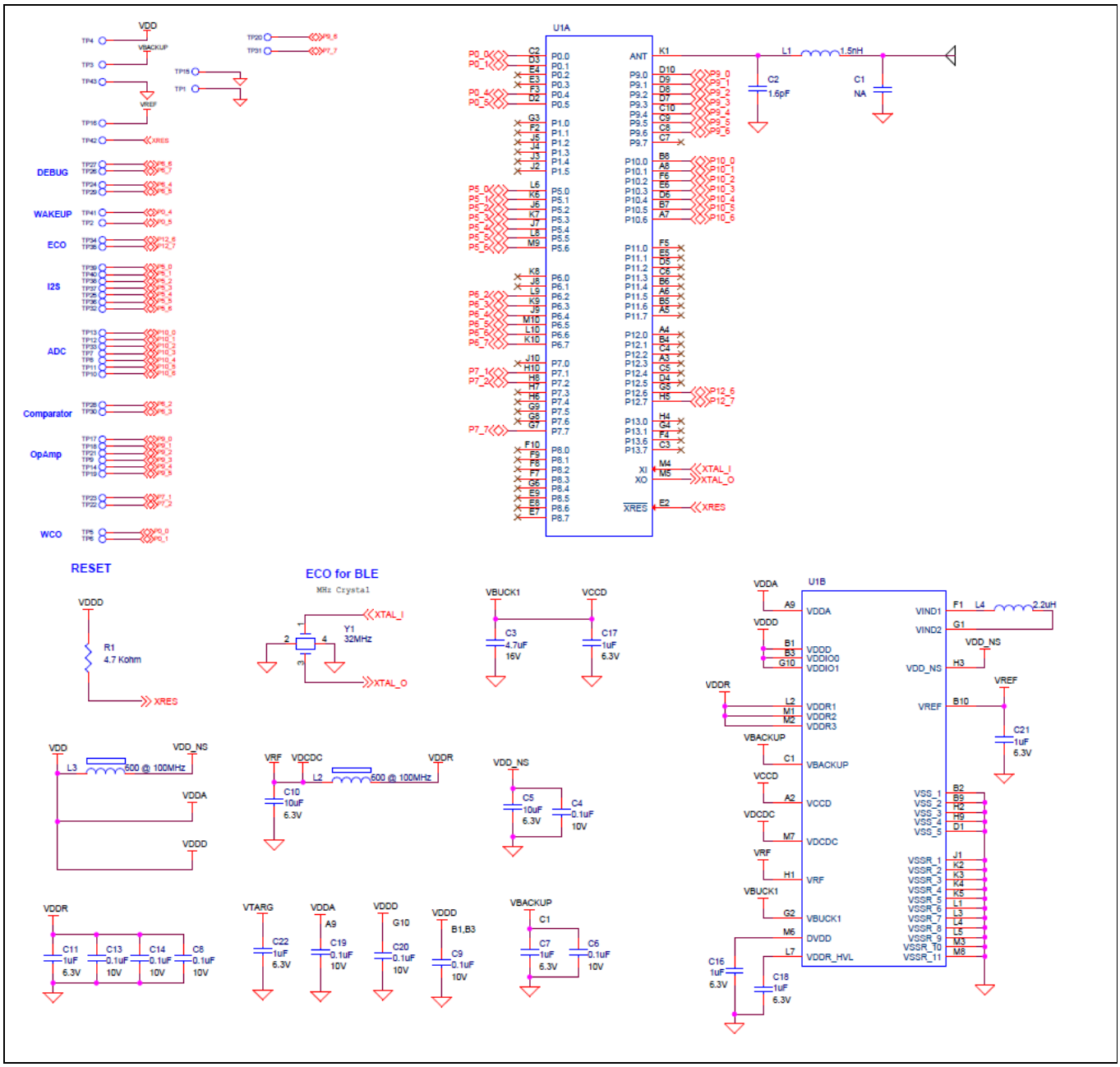

Figure 20 CYBLE-416070-02 schematic diagram

6.2 Critical components list

Table 13 details the critical components used in the CYBLE-416070-02 module.

Table 13 Critical component list

Component	Reference designator	Description
Silicon	U1	116-pin BGA Programmable system-on-chip (PSoC™ 6 MCU) with Bluetooth® LE
Crystal	Y1	32.000 MHz, 10 PF

6.3 Antenna design

Table 14 details the PCB trace antenna used on the CYBLE-416070-02 module.

Table 14 Trace antenna specifications

Item	Description
Frequency range	2400 – 2500 MHz
Peak gain	–0.5 dBi typical
Return loss	10 dB minimum

7 Electrical specification

Table 15 details the absolute maximum electrical characteristics for the Infineon Bluetooth® LE module.

Table 15 CYBLE-416070-02 absolute maximum ratings[6]

Parameter	Description	Min	Typ	Max	Unit	Details/conditions
V_{DDD_ABS}	V_{DD}, V_{DDA}, and V_{DDR} supply relative to V_{SS} ($V_{SSD} = V_{SSA}$)	–0.5	–	4	V	Absolute maximum
V_{CCD_ABS}	Direct digital core voltage input relative to V_{SSD}	–0.5	–	1.2	V	Absolute maximum
V_{DDD_RIPPLE}	Maximum power supply ripple for V_{DD}, V_{DDA}, and V_{DDR} input voltage	–	–	100	mV	3.0 V supply Ripple frequency of 100 kHz to 750 kHz
V_{GPIO_ABS}	GPIO voltage	–0.5	–	V_{DD} +0.5	V	Absolute maximum
I_{GPIO_ABS}	Maximum current per GPIO	–25	–	25	mA	Absolute maximum
$I_{GPIO_injection}$	GPIO injection current per pin	–0.5	–	0.5	mA	Absolute maximum current injected per pin
LU	Pin current for latch up	–100		100	mA	Absolute maximum

Note

6. Usage above the absolute maximum conditions listed in **Table 15** may cause permanent damage to the device. Exposure to absolute maximum conditions for extended periods of time may affect device reliability. The maximum storage temperature is 150°C in compliance with JEDEC Standard JESD22-A103, high temperature storage life. When used below absolute maximum conditions but above normal operating conditions, the device may not operate to specification.

7.1 Device-level specifications

All specifications are valid for –40°C ≤ TA ≤ 85°C and for 1.71 V to 3.6 V except where noted.

Table 16 Power supply range, CPU current, and transition time specifications

Parameter	Description	Min	Typ	Max	Unit	Details/conditions
DC specifications						
V_{DDD}	Internal regulator and Port 1 GPIO supply	1.71	–	3.6	V	–
V_{DDA}	Analog power supply voltage. Shorted to V_{DDIOA} on PCB	1.71	–	3.6	V	Internally unregulated supply
V_{DDIO1}	GPIO supply for Ports 5 to 8 when present	1.71	–	3.6	V	V_{DDIO_1} must be ≥ to V_{DDA}.
V_{DDIO0}	GPIO supply for Ports 11 to 13 when present	1.71	–	3.6	V	
V_{DDIO0}	Supply for eFuse programming	2.38	2.5	2.62	V	eFuse programming voltage
V_{DDIOR}	GPIO supply for Ports 2 to 4 on BGA 124 only	1.71	–	3.6	V	–
V_{DDIOA}	GPIO supply for Ports 9 to 10. Shorted to V_{DDA} on PCB	1.71	–	3.6	V	–
V_{BACKUP}	Backup power and GPIO Port 0 supply when present	1.71	–	3.6	V	Minimum is 1.4 V in Backup mode
V_{CCD1}	Output voltage (for core logic bypass)	–	1.1	–	V	High-speed mode

Table 16 Power supply range, CPU current, and transition time specifications *(continued)*

Parameter	Description	Min	Typ	Max	Unit	Details/conditions
V_{CCD2}	Output voltage (for core logic bypass)	–	0.9	–		ULP mode. Valid for –20 to 85°C
C_{EFC}	External regulator voltage (V_{CCD}) bypass	3.8	4.7	5.6	µF	X5R ceramic or better
C_{EXC}	Power supply decoupling capacitor	–	10	–	µF	X5R ceramic or better
LP range power specifications (for V_{CCD} = 1.1 V with buck and LDO)						
Cortex®-M4 - Active mode						
Execute with cache disabled (Flash)						
I_{DD1}	Execute from Flash; CM4 Active 50 MHz, CM0+ Sleep 25 MHz. With IMO and FLL. While(1)	–	2.3	3.2	mA	V_{DDD} = 3.3 V, Buck ON, max at 60°C
		–	3.1	3.6		V_{DDD} = 1.8 V, Buck ON, max at 60°C
		–	4.2	5.1		V_{DDD} = 1.8 to 3.3 V, LDO, max at 60°C
I_{DD2}	Execute from Flash; CM4 Active 8 MHz, CM0+ Sleep 8 MHz.With IMO. While(1)	–	0.9	1.5	mA	V_{DDD} = 3.3 V, Buck ON, max at 60°C
		–	1.2	1.6		V_{DDD} = 1.8 V, Buck ON, max at 60°C
		–	1.6	2.4		V_{DDD} = 1.8 to 3.3 V, LDO, max at 60°C
Execute with cache enabled						
I_{DD3}	Execute from Cache; CM4 Active150 MHz, CM0+ Sleep 75 MHz. IMO and FLL. Dhrystone	–	6.3	7	mA	V_{DDD} = 3.3 V, Buck ON, max at 60°C
		–	9.7	11.2		V_{DDD} = 1.8 V, Buck ON, max at 60°C
		–	13.2	13.7		V_{DDD} = 1.8 to 3.3 V, LDO, max at 60°C
I_{DD4}	Execute from Cache; CM4 Active100 MHz, CM0+ Sleep 100 MHz. IMO and FLL. Dhrystone	–	4.8	5.8	mA	V_{DDD} = 3.3 V, Buck ON, max at 60°C
		–	7.4	8.4		V_{DDD} = 1.8 V, Buck ON, max at 60°C
		–	10.1	10.7		V_{DDD} = 1.8 to 3.3 V, LDO, max at 60°C
I_{DD5}	Execute from Cache; CM4 Active 50 MHz, CM0+ Sleep 25 MHz. IMO and FLL. Dhrystone	–	2.4	3.4	mA	V_{DDD} = 3.3 V, Buck ON, max at 60°C
		–	3.7	4.1		V_{DDD} = 1.8 V, Buck ON, max at 60°C
		–	5.1	5.8		V_{DDD} = 1.8 to 3.3 V, LDO, max at 60°C
I_{DD6}	Execute from Cache; CM4 Active 8 MHz, CM0+ Sleep 8 MHz. IMO. Dhrystone	–	0.90	1.5	mA	V_{DDD} = 3.3 V, Buck ON, max at 60°C
		–	1.27	1.75		V_{DDD} = 1.8 V, Buck ON, max at 60°C
		–	1.8	2.6		V_{DDD} = 1.8 to 3.3 V, LDO, max at 60°C
Cortex®-M0+. Active mode						

Table 16 Power supply range, CPU current, and transition time specifications *(continued)*

Parameter	Description	Min	Typ	Max	Unit	Details/conditions
Execute with cache disabled (Flash)						
I_{DD7}	Execute from Flash;CM4 OFF, CM0+ Active 50 MHz. With IMO and FLL. While (1).	–	2.4	3.3	mA	V_{DDD} = 3.3 V, Buck ON, max at 60°C
		–	3.2	3.7		V_{DDD} = 1.8 V, Buck ON, max at 60°C
		–	4.1	4.8		V_{DDD} = 1.8 to 3.3 V, LDO, max at 60°C
I_{DD8}	Execute from Flash;CM4 OFF, CM0+ Active 8 MHz. With IMO. While (1)	–	0.8	1.5	mA	V_{DDD} = 3.3 V, Buck ON, max at 60°C
		–	1.1	1.6		V_{DDD} = 1.8 V, Buck ON, max at 60°C
		–	1.45	1.9		V_{DDD} = 1.8 to 3.3 V, LDO, max at 60°C
Execute with cache enabled						
I_{DD9}	Execute from Cache;CM4 OFF, CM0+ Active 100 MHz. With IMO and FLL. Dhrystone	–	3.8	4.5	mA	V_{DDD} = 3.3 V, Buck ON, max at 60°C
		–	5.9	6.5		V_{DDD} = 1.8 V, Buck ON, max at 60°C
		–	7.7	8.2		V_{DDD} = 1.8 to 3.3 V, LDO, max at 60°C
I_{DD10}	Execute from Cache;CM4 OFF, CM0+ Active 8 MHz. With IMO. Dhrystone	–	0.80	1.3	mA	V_{DDD} = 3.3 V, Buck ON, max at 60°C
		–	1.2	1.7		V_{DDD} = 1.8 V, Buck ON, max at 60°C
		–	1.41	2		V_{DDD} = 1.8 to 3.3 V, LDO, max at 60°C
Cortex®-M4. Sleep mode						
I_{DD11}	CM4 Sleep 100 MHz, CM0+ Sleep 25 MHz. With IMO and FLL	–	1.5	2.2	mA	V_{DDD} = 3.3 V, Buck ON, max at 60°C
		–	2.2	2.7		V_{DDD} = 1.8 V, Buck ON, max at 60°C
		–	2.9	3.5		V_{DDD} = 1.8 to 3.3 V, LDO, max at 60°C
I_{DD12}	CM4 Sleep 50 MHz, CM0+ Sleep 25 MHz. With IMO and FLL	–	1.20	1.9	mA	V_{DDD} = 3.3 V, Buck ON, max at 60°C
		–	1.70	2.2		V_{DDD} = 1.8 V, Buck ON, max at 60°C
		–	2.20	2.8		V_{DDD} = 1.8 to 3.3 V, LDO, max at 60°C
I_{DD13}	CM4 Sleep 8 MHz, CM0+ Sleep 8 MHz. With IMO	–	0.7	1.3	mA	V_{DDD} = 3.3 V, Buck ON, max at 60°C
		–	0.96	1.5		V_{DDD} = 1.8 V, Buck ON, max at 60°C
		–	1.22	2		V_{DDD} = 1.8 to 3.3 V, LDO, max at 60°C

Table 16 Power supply range, CPU current, and transition time specifications *(continued)*

Parameter	Description	Min	Typ	Max	Unit	Details/conditions
Cortex®-M0+. Sleep mode						
I_{DD14}	CM4 Off, CM0+ Sleep 50 MHz. With IMO and FLL	–	1.3	2	mA	V_{DDD} = 3.3 V, Buck ON, max at 60°C
		–	1.94	2.4		V_{DDD} = 1.8 V, Buck ON, max at 60°C
		–	2.57	3.2		V_{DDD} = 1.8 to 3.3 V, LDO, max at 60°C
I_{DD15}	CM4 Off, CM0+ Sleep 8 MHz. With IMO	–	0.7	1.3	mA	V_{DDD} = 3.3 V, Buck ON, max at 60°C
		–	0.95	1.5		V_{DDD} = 1.8 V, Buck ON, max at 60°C
		–	1.25	2		V_{DDD} = 1.8 to 3.3 V, LDO, max at 60°C
Cortex®-M4. Low-Power Active (LPA) mode						
I_{DD16}	Execute from Flash; CM4 LPA 8 MHz, CM0+ Sleep 8 MHz. With IMO. While (1)	–	0.85	1.5	mA	V_{DDD} = 3.3 V, Buck ON, max at 60°C
		–	1.18	1.65		V_{DDD} = 1.8 V, Buck ON, max at 60°C
		–	1.63	2.4		V_{DDD} = 1.8 to 3.3 V, LDO, max at 60°C
I_{DD17}	Execute from Cache; CM4 LPA 8 MHz, CM0+ Sleep 8 MHz. With IMO. Dhrystone	–	0.90	1.5	mA	V_{DDD} = 3.3 V, Buck ON, max at 60°C
		–	1.27	1.75		V_{DDD} = 1.8 V, Buck ON, max at 60°C
		–	1.77	2.5		V_{DDD} = 1.8 to 3.3 V, LDO, max at 60°C
Cortex®-M0+. Low-Power Active (LPA) mode						
I_{DD18}	Execute from Flash; CM4 Off, CM0+ LPA 8 MHz. With IMO. While (1)	–	0.8	1.4	mA	V_{DDD} = 3.3 V, Buck ON, max at 60°C
		–	1.14	1.6		V_{DDD} = 1.8 V, Buck ON, max at 60°C
		–	1.6	2.4		V_{DDD} = 1.8 to 3.3 V, LDO, max at 60°C
I_{DD19}	Execute from Cache; CM4 Off, CM0+ LPA 8 MHz. With IMO. Dhrystone	–	0.8	1.4	mA	V_{DDD} = 3.3 V, Buck ON, max at 60°C
		–	1.15	1.65		V_{DDD} = 1.8 V, Buck ON, max at 60°C
		–	1.62	2.4		V_{DDD} = 1.8 to 3.3 V, LDO, max at 60°C
Cortex®-M4. Low-Power Sleep (LPS) mode						

Table 16 Power supply range, CPU current, and transition time specifications *(continued)*

Parameter	Description	Min	Typ	Max	Unit	Details/conditions
I_{DD20}	CM4 LPS 8 MHz, CM0+ LPS 8 MHz. With IMO	–	0.65	1.1	mA	V_{DDD} = 3.3 V, Buck ON, max at 60°C
		–	0.95	1.5		V_{DDD} = 1.8 V, Buck ON, max at 60°C
		–	1.31	2.1		V_{DDD} = 1.8 to 3.3 V, LDO, max at 60°C
Cortex®-M0+. Low-Power Sleep (LPS) Mode						
I_{DD22}	CM4 OFF, CM0+ LPS 8 MHz. With IMO	–	0.64	1.1	mA	V_{DDD} = 3.3 V, Buck ON, max at 60°C
		–	0.93	1.45		V_{DDD} = 1.8 V, Buck ON, max at 60°C
		–	1.29	2		V_{DDD} = 1.8 to 3.3 V, LDO, max at 60°C
ULP range power specifications (for V_{CCD} = 0.9 V using the Buck). ULP Mode is valid from -20 to +85°C.						
Cortex®-M4. Active mode						
Execute with cache disabled (Flash)						
I_{DD3}	Execute from Flash; CM4 Active 50 MHz, CM0+ Sleep 25 MHz. With IMO and FLL. While(1)	–	1.7	2.2	mA	V_{DDD} = 3.3 V, Buck ON, max at 60°C
		–	2.1	2.4		V_{DDD} = 1.8 V, Buck ON, max at 60°C
I_{DD4}	Execute from Flash; CM4 Active 8 MHz, CM0+ Sleep 8 MHz. With IMO. While (1)	–	0.56	0.8	mA	V_{DDD} = 3.3 V, Buck ON, max at 60°C
		–	0.75	1		V_{DDD} = 1.8 V, Buck ON, max at 60°C
Execute with cache enabled						
I_{DD10}	Execute from Cache; CM4 Active 50 MHz, CM0+ Sleep 25 MHz. With IMO and FLL. Dhrystone	–	1.6	2.2	mA	V_{DDD} = 3.3 V, Buck ON, max at 60°C
		–	2.4	2.7		V_{DDD} = 1.8 V, Buck ON, max at 60°C
I_{DD11}	Execute from Cache; CM4 Active 8 MHz, CM0+ Sleep 8 MHz. With IMO. Dhrystone	–	0.65	0.8	mA	V_{DDD} = 3.3 V, Buck ON, max at 60°C
		–	0.8	1.1		V_{DDD} = 1.8 V, Buck ON, max at 60°C
Cortex®-M0+. Active mode						
Execute with cache disabled (Flash)						
I_{DD16}	Execute from Flash; CM4 Off, CM0+ Active 25 MHz. With IMO and FLL. Write(1)	–	1.00	1.4	mA	V_{DDD} = 3.3 V, Buck ON, max at 60°C
		–	1.34	1.6		V_{DDD} = 1.8 V, Buck ON, max at 60°C
I_{DD17}	Execute from Flash; CM4 Off, CM0+ Active 8 MHz. With IMO. While(1)	–	0.54	0.75	mA	V_{DDD} = 3.3 V, Buck ON, max at 60°C
		–	0.73	1		V_{DDD} = 1.8 V, Buck ON, max at 60°C

Table 16 Power supply range, CPU current, and transition time specifications *(continued)*

Parameter	Description	Min	Typ	Max	Unit	Details/conditions
Execute with cache enabled						
I_{DD18}	Execute from Cache; CM4 Off, CM0+ Active 25 MHz. With IMO and FLL. Dhrystone	–	0.91	1.25	mA	V_{DDD} = 3.3 V, Buck ON, max at 60°C
		–	1.34	1.6		V_{DDD} = 1.8 V, Buck ON, max at 60°C
I_{DD19}	Execute from Cache; CM4 Off, CM0+ Active 8 MHz. With IMO. Dhrystone	–	0.51	0.72	mA	V_{DDD} = 3.3 V, Buck ON, max at 60°C
		–	0.73	0.95		V_{DDD} = 1.8 V, Buck ON, max at 60°C
Cortex®-M4. Sleep mode						
I_{DD21}	CM4 Sleep 50 MHz, CM0+ Sleep 25 MHz. With IMO and FLL	–	0.76	1.1	mA	V_{DDD} = 3.3 V, Buck ON, max at 60°C
		–	1.1	1.4		V_{DDD} = 1.8 V, Buck ON, max at 60°C
I_{DD22}	CM4 Sleep 8 MHz, CM0+ Sleep 8 MHz. With IMO	–	0.42	0.65	mA	V_{DDD} = 3.3 V, Buck ON, max at 60°C
		–	0.59	0.8		V_{DDD} = 1.8 V, Buck ON, max at 60°C
Cortex®-M0+. Sleep mode						
I_{DD23}	CM4 Off, CM0+ Sleep 25 MHz. With IMO and FLL	–	0.62	0.9	mA	V_{DDD} = 3.3 V, Buck ON, max at 60°C
		–	0.88	1.1		V_{DDD} = 1.8 V, Buck ON, max at 60°C
I_{DD24}	CM4 Off, CM0+ Sleep 8 MHz. With IMO	–	0.41	0.6	mA	V_{DDD} = 3.3 V, Buck ON, max at 60°C
		–	0.58	0.8		V_{DDD} = 1.8 V, Buck ON, max at 60°C
Cortex®-M4. Ultra Low-Power Active (ULPA) mode						
I_{DD25}	Execute from Flash. CM4 ULPA 8 MHz, CM0+ ULPS 8 MHz. With IMO. While(1)	–	0.52	0.75	mA	V_{DDD} = 3.3 V, Buck ON, max at 60°C
		–	0.76	1		V_{DDD} = 1.8 V, Buck ON, max at 60°C
I_{DD26}	Execute from Cache. CM4 ULPA 8 MHz, CM0+ ULPS 8 MHz. With IMO. Dhrystone	–	0.54	0.76	mA	V_{DDD} = 3.3 V, Buck ON, max at 60°C
		–	0.78	1		V_{DDD} = 1.8 V, Buck ON, max at 60°C
Cortex®-M0+. Ultra Low-Power Active (ULPA) mode						
I_{DD27}	Execute from Flash. CM4 OFF, CM0+ ULPA 8 MHz. With IMO. While (1)	–	0.51	0.75	mA	V_{DDD} = 3.3 V, Buck ON, max at 60°C
		–	0.75	1		V_{DDD} = 1.8 V, Buck ON, max at 60°C
I_{DD28}	Execute from Cache. CM4 OFF, CM0+ ULPA 8 MHz. With IMO. Dhrystone	–	0.48	0.7	mA	V_{DDD} = 3.3 V, Buck ON, max at 60°C
		–	0.7	0.95		V_{DDD} = 1.8 V, Buck ON, max at 60°C

Table 16 Power supply range, CPU current, and transition time specifications *(continued)*

Parameter	Description	Min	Typ	Max	Unit	Details/conditions
Cortex®-M4. Ultra Low-Power Sleep (ULPS) mode						
I_{DD29}	CM4 ULPS 8 MHz, CM0 ULPS 8 MHz. With IMO	–	0.4	0.6	mA	V_{DDD} = 3.3 V, Buck ON, max at 60°C
		–	0.57	0.8		V_{DDD} = 1.8 V, Buck ON, max at 60°C
Cortex®-M0+. Ultra Low-Power Sleep (ULPS) mode						
I_{DD31}	CM4 Off, CM0+ ULPS 8 MHz. With IMO.	–	0.39	0.6	mA	V_{DDD} = 3.3 V, Buck ON, max at 60°C
		–	0.56	0.8		V_{DDD} = 1.8 V, Buck ON, max at 60°C
Deep Sleep mode						
I_{DD33A}	With internal Buck enabled and 64K SRAM retention	–	7	–	µA	Max value is at 85°C
I_{DD33A_B}	With internal Buck enabled and 64K SRAM retention	–	7	–	µA	Max value is at 60°C
I_{DD33B}	With internal Buck enabled and 256K SRAM retention	–	9	–	µA	Max value is at 85°C
I_{DD33B_B}	With internal Buck enabled and 256K SRAM retention	–	9	–	µA	Max value is at 60°C
Hibernate mode						
I_{DD34}	V_{DDD} = 1.8 V	–	300	–	nA	No clocks running
I_{DD34A}	V_{DDD} = 3.3 V	–	800	–	nA	No clocks running
Power mode transition times						
T_{LPACT_ACT}	Low-Power Active to Active transition time	–	–	35	µs	Including PLL lock time
T_{DS_LPACT}	Deep Sleep to LP Active transition time	–	–	25	µs	Guaranteed by design
T_{DS_ACT}	Deep Sleep to Active transition time	–	–	25	µs	Guaranteed by design
T_{HIB_ACT}	Hibernate to Active transition time	–	500	–	µs	Including PLL lock time

7.1.1 Module level power consumption

Test condition: V_{DDD} = 3.3 V, Execute from Cache, WCO Enable

Table 17 Module level power consumption

Test items	Specification (1.1 V LDO)		Specification (1.1 V Buck)		Condition
	Typ	Max	Typ	Max	
CM0 Power mode transition					
Active	7.7 mA	8.2 mA	3.8 mA	4.5 mA	CM4 Off, CM0+ Active 100 MHz
Sleep	2.57 mA	3.2 mA	1.3 mA	2 mA	CM4 Off, CM0+ Sleep 50 MHz
Low-Power Active	1.62 mA	2.4 mA	0.8 mA	1.4 mA	CM4 Off, CM0+ LPA 8 MHz
Low-Power Sleep	1.29 mA	2 mA	0.64 mA	1.1 mA	CM4 Off, CM0+ LPS 8 MHz
CM4 Power mode transition					

Table 17 Module level power consumption *(continued)*

Test items	Specification (1.1 V LDO)		Specification (1.1 V Buck)		Condition
	Typ	Max	Typ	Max	
Active	10.1 mA	10.7 mA	4.8 mA	5.8 mA	CM4 Active 100 MHz, CM0+ Sleep 100 MHz
Sleep	2.9 mA	3.5 mA	1.5 mA	2.2 mA	CM4 Sleep 100 MHz, CM0+ Sleep 25 MHz
Low-Power Active	1.77 mA	2.5 mA	0.9 mA	1.5 mA	CM4 LPA 8 MHz, CM0+ Sleep 8 MHz
Low-Power Sleep	1.31 mA	2.1 mA	0.65 mA	1.1 mA	CM4 LPS 8 MHz, CM0+ LPS 8 MHz
Bluetooth® LE RF current (DIRECT_TEST_MODE)					
TX (0dBm, 1 Mbps)	10 mA		5.7 mA		HCI Command
TX (0dBm, 2 Mbps)	10 mA		5.7 mA		
RX (1 Mbps)	11 mA		6.7 mA		HCI Command
RX (2 Mbps)	11.3 mA		7 mA		
System level Bluetooth® LE (System_Level)					
Test items	**PILO (1.1 V Buck)**		**WCO (1.1 V Buck)**		**Condition**
	Typ	**Max**	**Typ**	**Max**	
Deep Sleep	90 µA	120 µA	7 µA	14 µA	
Adv 1.28s interval	80 µA	121 µA	21 µA	28 µA	32 bytes,0 dBm, 3.3 V, Buck
300 ms connection interval	170 µA	305 µA	28 µA	34 µA	0 byte,0 dBm, 3.3 V, Buck
1s connection interval	75 µA	106 µA	18 µA	23 µA	
4s connection interval	75 µA	106 µA	14 µA	19 µA	
Hibernate	1.2 µA	1.8 µA	2.0 µA	2.3 µA	

7.1.2 XRES

Table 18 XRES

Parameter	Description	Min	Typ	Max	Unit	Details/conditions
XRES (Active Low) specifications						
XRES AC specifications						
T_{XRES_ACT}	POR or XRES release to active transition time	–	750	–	µs	Normal mode, 50 MHz M0+
T_{XRES_PW}	XRES Pulse width	5	–	–	µs	–
XRES DC specifications						
T_{XRES_IDD}	I_{DD} when XRES asserted	–	300	–	nA	V_{DDD} = 1.8 V
$T_{XRES_IDD_1}$	I_{DD} when XRES asserted	–	800	–	nA	V_{DDD} = 3.3 V
V_{IH}	Input voltage high threshold	0.7 * V_{DD}	–	–	V	CMOS Input
V_{IL}	Input voltage low threshold	–	–	0.3* V_{DD}	V	CMOS Input
C_{IN}	Input capacitance	–	3	–	pF	–
$V_{HYSXRES}$	Input voltage hysteresis	–	100	–	mV	–
I_{DIODE}	Current through protection diode to V_{DD}/V_{SS}	–	–	100	µA	–

Notes

7. Infineon-supplied software wakeup routines take approximately 100 CPU clock cycles after hardware wakeup (the 25 µs) before transition to Application code. With an 8-MHz CPU clock (LP Active), the time before user code executes is 25 + 12.5 = 37.5 µs.
8. Infineon-supplied software wakeup routines take approximately 100 CPU clock cycles after hardware wakeup (the 25 µs) before transition to Application code. With a 25-MHz CPU clock (FLL), the time before user code executes is 25 + 4 = 29 µs. With a 100-MHz CPU clock, the time is 25 + 1 = 26 µs.

7.1.3 GPIO

Table 19 GPIO specifications

Parameter	Description	Min	Typ	Max	Unit	Details/conditions
GPIO DC specifications						
V_{IH}	Input voltage high threshold	0.7 * V_{DD}	–	–	V	CMOS Input
I_{IHS}	Input current when Pad > VDDIO for OVT inputs	–	–	10	µA	Per I^2C Spec
V_{IL}	Input voltage low threshold	–	–	0.3*V_{DD}	V	CMOS Input
V_{IH}	LVTTL input, V_{DD} < 2.7 V	0.7 * V_{DD}	–	–	V	–
V_{IL}	LVTTL input, V_{DD} < 2.7 V	–	–	0.3*V_{DD}	V	–
V_{IH}	LVTTL input, V_{DD} ≥ 2.7 V	2.0	–	–	V	–
V_{IL}	LVTTL input, V_{DD} ≥ 2.7 V	–	–	0.8	V	–
V_{OH}	Output voltage high level	V_{DD} - 0.5	–	–	V	I_{OH} = 8 mA
V_{OL}	Output voltage low level	–	–	0.4	V	I_{OL} = 8 mA
R_{PULLUP}	Pull-up resistor	3.5	5.6	8.5	kΩ	–
$R_{PULLDOWN}$	Pull-down resistor	3.5	5.6	8.5	kΩ	–
I_{IL}	Input leakage current (absolute value)	–	–	2	nA	25 °C, V_{DD} = 3.0 V
I_{IL_CTBM}	Input leakage on CTBm input pins	–	–	4	nA	–
C_{IN}	Input Capacitance	–	–	5	pF	–
V_{HYSTTL}	Input hysteresis LVTTL V_{DD} > 2.7 V	100	0	–	mV	–
$V_{HYSCMOS}$	Input hysteresis CMOS	0.05 * V_{DD}	–	–	mV	–
I_{DIODE}	Current through protection diode to V_{DD}/V_{SS}	–	–	100	µA	–
I_{TOT_GPIO}	Maximum Total Source or Sink Chip Current	–	–	200	mA	
GPIO AC specifications						
T_{RISEF}	Rise time in Fast Strong mode. 10% to 90% of V_{DD}	–	–	2.5	ns	C_{load} = 15 pF, 8 mA drive strength
T_{FALLF}	Fall time in Fast Strong mode. 10% to 90% of V_{DD}	–	–	2.5	ns	C_{load} = 15 pF, 8 mA drive strength
T_{RISES_1}	Rise time in Slow Strong mode. 10% to 90% of V_{DD}	52	–	142	ns	C_{load} = 15 pF, 8 mA drive strength, V_{DD} ≤ 2.7 V
T_{RISES_2}	Rise time in Slow Strong mode. 10% to 90% of V_{DD}	48	–	102	ns	C_{load} = 15 pF, 8 mA drive strength, 2.7 V < V_{DD} ≤ 3.6 V
T_{FALLS_1}	Fall time in Slow Strong mode. 10% to 90% of V_{DD}	44	–	211	ns	C_{load} = 15 pF, 8 mA drive strength, V_{DD} ≤ 2.7 V
T_{FALLS_2}	Fall time in Slow Strong mode. 10% to 90% of V_{DD}	42	–	93	ns	C_{load} = 15 pF, 8 mA drive strength, 2.7 V < V_{DD} ≤ 3.6 V

Table 19 GPIO specifications *(continued)*

Parameter	Description	Min	Typ	Max	Unit	Details/conditions
T_{FALL_I2C}	Fall time (30% to 70% of V_{DD}) in Slow Strong mode	20*V_{DDIO}/5.5	–	250	ns	Cl_{load} = 10 pF to 400 pF, 8-mA drive strength
$F_{GPIOUT1}$	GPIO F_{out}. Fast Strong mode	–	–	100	MHz	90/10%, 15-pF load, 60/40 duty cycle
$F_{GPIOUT2}$	GPIO F_{out}; Slow Strong mode	–	–	16.7	MHz	90/10%, 15-pF load, 60/40 duty cycle
$F_{GPIOUT3}$	GPIO F_{out}; Fast Strong mode	–	–	7	MHz	90/10%, 25-pF load, 60/40 duty cycle
$F_{GPIOUT4}$	GPIO F_{out}; Slow Strong mode	–	–	3.5	MHz	90/10%, 25-pF load, 60/40 duty cycle
F_{GPIOIN}	GPIO input operating frequency;1.71 V ≤ V_{DD} ≤ 3.6 V	–	–	100	MHz	90/10% V_{IO}

7.2 Analog peripherals

7.2.1 Opamp

Table 20 Opamp specifications

Parameter	Description	Min	Typ	Max	Unit	Details/conditions
I_{DD}	Opamp block current. No load.	–	–	–	–	–
I_{DD_HI}	Power = HI	–	1300	1500	µA	–
I_{DD_MED}	Power = MED	–	450	600	µA	–
I_{DD_LOW}	Power = LO	–	250	350	µA	–
GBW	Load = 20 pF, 0.1 mA V_{DDA} = 2.7 V	–	–	–	–	–
G_{BW_HI}	Power = HI	6	–	–	MHz	–
G_{BW_MED}	Power = MED	4	–	–	MHz	–
G_{BW_LO}	Power = LO	–	1	–	MHz	–
I_{OUT_MAX}	V_{DDA} ≥ 2.7 V, 500 mV from rail	–	–	–	–	–
$I_{OUT_MAX_HI}$	Power = HI	–	–	–	mA	–
$I_{OUT_MAX_MID}$	Power = MID	10	–	–	mA	–
$I_{OUT_MAX_LO}$	Power = LO	–	5	–	mA	–
I_{OUT}	V_{DDA} = 1.71 V, 500 mV from rail	–	–	–		–
$I_{OUT_MAX_HI}$	Power = HI	4	–	–	mA	–
$I_{OUT_MAX_MID}$	Power = MID	4	–	–	mA	–
$I_{OUT_MAX_LO}$	Power = LO	–	2	–	mA	–
V_{IN}	Input voltage range	0	–	V_{DDA}-0.2	V	–
V_{CM}	Input common mode voltage	0	–	V_{DDA}-0.2	V	–
V_{OUT}	V_{DDA} ≥ 2.7 V	–	–	–		–
V_{OUT_1}	Power = HI, I_{load} = 10 mA	0.5	–	V_{DDA}-0.5	V	–
V_{OUT_2}	Power = HI, I_{load} = 1 mA	0.2	–	V_{DDA}-0.2	V	–

Table 20 Opamp specifications *(continued)*

Parameter	Description	Min	Typ	Max	Unit	Details/conditions
V_{OUT_3}	Power = MED, I_{load} = 1 mA	0.2	–	V_{DDA}-0.2	V	–
V_{OUT_4}	Power = LO, I_{load} = 0.1 mA	0.2	–	V_{DDA}-0.2	V	–
V_{OS_UNTR}	Offset voltage, untrimmed	–	–	–	mV	–
V_{OS_TR}	Offset voltage, trimmed	–	±0.5	–	mV	High mode, 0.2 to V_{DDA} - 0.2
V_{OS_TR}	Offset voltage, trimmed	–	±1	–	mV	Medium mode
V_{OS_TR}	Offset voltage, trimmed	–	±2	–	mV	Low mode
$V_{OS_DR_UNTR}$	Offset voltage drift, untrimmed	–	–	–	µV/°C	–
$V_{OS_DR_TR}$	Offset voltage drift, trimmed	–10	±3	10	µV/°C	High mode, 0.2 to V_{DDA} - 0.2
$V_{OS_DR_TR}$	Offset voltage drift, trimmed	–	±10	–	µV/°C	Medium mode
$V_{OS_DR_TR}$	Offset voltage drift, trimmed	–	±10	–	µV/°C	Low mode
common-mode rejection ratio (CMRR)	DC common mode rejection ratio	67	80	–	dB	V_{DDD} = 3.3 V
power supply rejection ratio (PSRR)	Power supply rejection ratio at 1 kHz, 10-mV ripple	70	85	–	dB	V_{DDD} = 3.3 V
Noise	–	–	–	–	–	–
VN1	Input-referred, 1 Hz - 1 GHz, power = HI	–	100	–	µVrms	–
VN2	Input-referred, 1 kHz, power = HI	–	180	–	nV/root Hz	–
VN3	Input-referred, 10 kHz, power = HI	–	70	–	nV/root Hz	–
VN4	Input-referred, 100 kHz, power = HI	–	38	–	nV/root Hz	–
CLOAD	Stable up to maximum load Performance specs at 50 pF	–	–	125	pF	–
SLEW_RATE	Output slew rate	6	–	–	V/µs	C_{load} = 50 pF, Power = High, $V_{DDA} \geq 2.7$ V
T_OP_WAKE	From disable to enable, no external RC dominating	–	25	–	µs	–
COMP_MODE	Comparator mode; 50-mV overdrive, $T_{rise} = T_{fall}$ (approx.)	–	–	–	–	–
T_{PD1}	Response time; power = HI	–	150	–	ns	–
T_{PD2}	Response time; power = MED	–	400	–	ns	–
T_{PD3}	Response time; power = LO	–	2000	–	ns	–
V_{HYST_OP}	Hysteresis	–	10	–	mV	–
Deep Sleep mode	Mode 2 is lowest current range Mode 1 has higher GBW	–	–	–	–	Deep Sleep mode operation: $V_{DDA} \geq 2.7$ V V_{IN} is 0.2 to V_{DDA} -1.5
$I_{DD_HI_M1}$	Mode 1, High current	–	1300	1500	µA	Typ at 25°C
$I_{DD_MED_M1}$	Mode 1, Medium current	–	460	600	µA	Typ at 25°C

Table 20 Opamp specifications *(continued)*

Parameter	Description	Min	Typ	Max	Unit	Details/conditions
$I_{DD_LOW_M1}$	Mode 1, Low current	–	230	350	µA	Typ at 25°C
$I_{DD_HI_M2}$	Mode 2, High current	–	120	–	µA	25°C
$I_{DD_MED_M2}$	Mode 2, Medium current	–	60	–	µA	25°C
$I_{DD_LOW_M2}$	Mode 2, Low current	–	15	–	µA	25°C
GBW_HI_M1	Mode 1, High current	–	4	–	MHz	25°C
GBW_MED_M1	Mode 1, Medium current	–	2	–	MHz	25°C
GBW_LOW_M1	Mode 1, Low current	–	0.5	–	MHz	25°C
GBW_HI_M2	Mode 2, High current	–	0.5	–	MHz	20-pF load, no DC load 0.2 V to V_{DDA} -1.5 V
GBW_MED_M2	Mode 2, Medium current	–	0.2	–	MHz	20-pF load, no DC load 0.2 V to V_{DDA} -1.5 V
GBW_LOW_M2	Mode 2, Low current	–	0.1	–	MHz	20-pF load, no DC load 0.2 V to V_{DDA} -1.5 V
$V_{OS_HI_M1}$	Mode 1, High current	–	5	–	mV	With trim 25°C, 0.2 V to V_{DDA} -1.5 V
$V_{OS_MED_M1}$	Mode 1, Medium current	–	5	–	mV	With trim 25°C, 0.2 V to V_{DDA} -1.5 V
$V_{OS_LOW_M1}$	Mode 1, Low current	–	5	–	mV	With trim 25°C, 0.2 V to V_{DDA} -1.5 V
$V_{OS_HI_M2}$	Mode 2, High current	–	5	–	mV	With trim 25°C, 0.2 V to V_{DDA} -1.5 V
$V_{OS_MED_M2}$	Mode 2, Medium current	–	5	–	mV	With trim 25°C, 0.2 V to V_{DDA} -1.5 V
$V_{OS_LOW_M2}$	Mode 2, Low current	–	5	–	mV	With trim 25°C, 0.2 V to V_{DDA} -1.5 V
$I_{OUT_HI_M1}$	Mode 1, High current	–	10	–	mA	Output is 0.5 V to V_{DDA} -0.5 V
$I_{OUT_MED_M1}$	Mode 1, Medium current	–	10	–	mA	Output is 0.5 V to V_{DDA} -0.5 V
$I_{OUT_LOW_M1}$	Mode 1, Low current	–	4	–	mA	Output is 0.5 V to V_{DDA} -0.5 V
$I_{OUT_HI_M2}$	Mode 2, High current	–	1	–	mA	Output is 0.5 V to V_{DDA} -0.5 V
$I_{OUT_MED_M2}$	Mode 2, Medium current	–	1	–	mA	Output is 0.5 V to V_{DDA} -0.5 V
$I_{OUT_LOW_M2}$	Mode 2, Low current	–	0.5	–	mA	Output is 0.5 V to V_{DDA} -0.5 V

Table 21 Low-Power (LP) comparator specifications

Parameter	Description	Min	Typ	Max	Unit	Details/conditions
LP comparator DC specifications						
$V_{OFFSET1}$	Input offset voltage for COMP1. Normal power mode	–10	–	10	mV	COMP0 offset is ±25 mV
$V_{OFFSET2}$	Input offset voltage. Low-power mode	–25	±12	25	mV	–
$V_{OFFSET3}$	Input offset voltage. Ultra low-power mode	–25	±12	25	mV	–
V_{HYST1}	Hysteresis when enabled in Normal mode	–	–	60	mV	–
V_{HYST2}	Hysteresis when enabled in Low-power mode	–	–	80	mV	–
V_{ICM1}	Input common mode voltage in Normal mode	0	–	V_{DDIO1} -0.1	V	–
V_{ICM2}	Input common mode voltage in Low-power mode	0	–	V_{DDIO1} -0.1	V	–
V_{ICM3}	Input common mode voltage in Ultra low-power mode	0	–	V_{DDIO1} -0.1	V	–
CMRR	Common mode rejection ratio in Normal power mode	50	–	–	dB	–
I_{CMP1}	Block current, Normal mode	–	–	150	µA	–
I_{CMP2}	Block current, Low-power mode	–	–	10	µA	–
I_{CMP3}	Block current in Ultra low-power mode	–	0.3	0.85	µA	–
ZCMP	DC input impedance of comparator	35	–	–	MΩ	–
LP comparator AC specifications						
T_{RESP1}	Response time, Normal mode, 100 mV overdrive	–	–	100	ns	–
T_{RESP2}	Response time, Low-power mode, 100 mV overdrive	–	–	1000	ns	–
T_{RESP3}	Response time, Ultra low-power mode, 100 mV overdrive	–	–	20	µs	–
T_CMP_EN1	Time from enabling to operation	–	–	10	µs	Normal and Low-power modes
T_CMP_EN2	Time from enabling to operation	–	–	50	µs	Ultra low-power mode

Table 22 Temperature sensor specifications

Parameter	Description	Min	Typ	Max	Unit	Details/conditions
$T_{SENSACC}$	Temperature sensor accuracy	–	±1	5	°C	–40 to +85°C

Table 23 Internal reference specification

Parameter	Description	Min	Typ	Max	Unit	Details/conditions
V_{REFBG}	–	1.188	1.2	1.212	V	–

7.2.2 SAR ADC

Table 24 12-bit SAR ADC DC specifications

Parameter	Description	Min	Typ	Max	Unit	Details/conditions
A_RES	SAR ADC resolution	–	–	12	bits	–
A_CHNLS_S	Number of channels - single ended	–	–	16	–	8 full speed
A-CHNKS_D	Number of channels - differential	–	–	8	–	Differential inputs use neighboring I/O
A-MONO	Monotonicity	–	–	–	–	Yes
A_GAINERR	Gain error	–	–	±0.2	%	With external reference
A_OFFSET	Input offset voltage	–	–	2	mV	Measured with 1-V reference
A_ISAR_1	Current consumption at 1 Msps	–	–	1	mA	At 1 Msps. External bypass capacitor
A_ISAR_2	Current consumption at 1 Msps. Reference = V_{DD}	–	–	1.25	mA	At 1 Msps. External bypass capacitor
A_VINS	Input voltage range - single-ended	Vss	–	V_{DDA}	V	–
A_VIND	Input voltage range - differential	Vss	–	V_{DDA}	V	–
A_INRES	Input resistance	–	–	2.2	KΩ	–
A_INCAP	Input capacitance	–	–	10	pF	–

Table 25 12-bit SAR ADC AC specifications

Parameter	Description	Min	Typ	Max	Unit	Details/conditions
12-bit SAR ADC AC specifications						
A_PSRR	Power supply rejection ratio	70	–	–	dB	–
A_CMRR	Common mode rejection ratio	66	–	–	dB	Measured at 1 V
One Msp per second mode:						
A_SAMP_1	Sample rate with external reference bypass capacitor	–	–	1	Msps	–
A_SAMP_2	Sample rate with no bypass capacitor; Reference = V_{DD}	–	–	250	Ksps	–
A_SAMP_3	Sample rate with no bypass capacitor; Internal reference	–	–	100	Ksps	–
A_SINAD	Signal-to-noise and Distortion ratio (SINAD). V_{DDA} = 2.7 to 3.6 V, 1 Msps	64	–	–	dB	F_{in} = 10 kHz
A_INL	Integral Non Linearity. V_{DDA} = 2.7 to 3.6 V, 1 Msps	–2	–	2	LSB	Measured with internal V_{REF} =1.2 V and bypass capacitor
A_INL	Integral Non Linearity. V_{DDA} = 2.7 to 3.6 V, 1 Msps	–4	–	4	LSB	Measured with external $V_{REF} \geq 1$ V and V_{IN} common mode < 2 * V_{REF}
A_DNL	Differential Non Linearity. V_{DDA} = 2.7 to 3.6 V, 1 Msps	–1	–	1.4	LSB	Measured with internal V_{REF} = 1.2 V and bypass capacitor

Table 25 12-bit SAR ADC AC specifications *(continued)*

Parameter	Description	Min	Typ	Max	Unit	Details/conditions
A_DNL	Differential Non Linearity. V_{DDA} = 2.7 to 3.6 V, 1 Msps	–1	–	1.7	LSB	Measured with external $V_{REF} \geq 1$ V and V_{IN} common mode < 2 * V_{REF}
A_THD	Total harmonic distortion. V_{DDA} = 2.7 to 3.6 V, 1 Msps	–	–	–65	dB	F_{in} = 10 kHz

Table 26 12-bit DAC Specifications

Parameter	Description	Min	Typ	Max	Unit	Details/Conditions
12-bit DAC DC specifications						
DAC_RES	DAC resolution	–	–	12	bits	–
DAC_INL	Integral nonlinearity	–4	–	4	LSB	–
DAC_DNL	Differential nonlinearity	–2	–	2	LSB	Monotonic to 11 bits.
DAC_OFFSET	Output Voltage zero offset error	–10	–	10	mV	For 000 (hex)
DAC_OUT_RES	DAC Output resistance	–	15	–	kΩ	–
DAC_IDD	DAC Current	–	–	125	µA	–
DAC_QIDD	DAC Current when DAC stopped	–	–	1	µA	–
12-bit DAC AC specifications						
DAC_CONV	DAC Settling time	–	–	2	µs	Driving through CTBm buffer; 25 pF load
DAC_WAKEUP	Time from Enabling to ready for conversion	–	–	10	µs	–

7.2.3 CSD

Table 27 CAPSENSE™ Sigma-Delta (CSD) specifications

Parameter	Description	Min	Typ	Max	Unit	Details/conditions
CSD V2 specifications						
V_{DD_RIPPLE}	Max allowed ripple on power supply, DC to 10 MHz	–	–	±50	mV	V_{DDA} > 2 V (with ripple), 25°C T_A, Sensitivity = 0.1 pF
$V_{DD_RIPPLE_1.8}$	Max allowed ripple on power supply, DC to 10 MHz	–	–	±25	mV	V_{DDA} > 1.75 V (with ripple), 25°C T_A, Parasitic Capacitance (C_P) < 20 pF, Sensitivity ≥ 0.4 pF
I_{CSD}	Maximum block current			4500	µA	
V_{REF}	Voltage reference for CSD and comparator	0.6	1.2	V_{DDA} - 0.6	V	$V_{DDA} - V_{REF} \geq 0.6$ V
V_{REF_EXT}	External voltage reference for CSD and comparator	0.6		V_{DDA} - 0.6	V	$V_{DDA} - V_{REF} \geq 0.6$ V
$I_{DAC1IDD}$	IDAC1 (7-bits) block current	–	–	1900	µA	
$I_{DAC2IDD}$	IDAC2 (7-bits) block current	–	–	1900	µA	
V_{CSD}	Voltage range of operation	1.71	–	3.6	V	1.71 to 3.6 V
$V_{COMPIDAC}$	Voltage compliance range of IDAC	0.6	–	V_{DDA} –0.6	V	$V_{DDA} - V_{REF} \geq 0.6$ V
$I_{DAC1DNL}$	DNL	–1	–	1	LSB	
$I_{DAC1INL}$	INL	–3	–	3	LSB	If V_{DDA} < 2 V then for LSB of 2.4 µA or less
$I_{DAC2DNL}$	DNL	–1	–	1	LSB	
$I_{DAC2INL}$	INL	–3	–	3	LSB	If V_{DDA} < 2 V then for LSB of 2.4 µA or less
SNRC of the following is ratio of counts of finger to noise. Guaranteed by characterization						
SNRC_1	SRSS Reference. IMO + FLL Clock Source. 0.1-pF sensitivity	5	–	–	Ratio	9.5-pF maximum capacitance
SNRC_2	SRSS Reference. IMO + FLL Clock Source. 0.3-pF sensitivity	5	–	–	Ratio	31-pF maximum capacitance
SNRC_3	SRSS Reference. IMO + FLL Clock Source. 0.6-pF sensitivity	5	–	–	Ratio	61-pF maximum capacitance
SNRC_4	PASS Reference. IMO + FLL Clock Source. 0.1-pF sensitivity	5	–	–	Ratio	12-pF maximum capacitance
SNRC_5	PASS Reference. IMO + FLL Clock Source. 0.3-pF sensitivity	5	–	–	Ratio	47-pF maximum capacitance
SNRC_6	PASS Reference. IMO + FLL Clock Source. 0.6-pF sensitivity	5	–	–	Ratio	86-pF maximum capacitance
SNRC_7	PASS Reference. IMO + PLL Clock Source. 0.1-pF sensitivity	5	–	–	Ratio	27-pF maximum capacitance
SNRC_8	PASS Reference. IMO + PLL Clock Source. 0.3-pF sensitivity	5	–	–	Ratio	86-pF maximum capacitance
SNRC_9	PASS Reference. IMO + PLL Clock Source. 0.6-pF sensitivity	5	–	–	Ratio	168-pF maximum capacitance

Table 27 CAPSENSE™ Sigma-Delta (CSD) specifications *(continued)*

Parameter	Description	Min	Typ	Max	Unit	Details/conditions
$I_{DAC1CRT1}$	Output current of IDAC1 (7 bits) in low range	4.2		5.7	µA	LSB = 37.5 nA typical
$I_{DAC1CRT2}$	Output current of IDAC1(7 bits) in medium range	33.7		45.6	µA	LSB = 300 nA typical
$I_{DAC1CRT3}$	Output current of IDAC1(7 bits) in high range	270		365	µA	LSB = 2.4 µA typical
$I_{DAC1CRT12}$	Output current of IDAC1 (7 bits) in low range, 2X mode	8		11.4	µA	LSB = 37.5 nA typical 2X output stage
$I_{DAC1CRT22}$	Output current of IDAC1(7 bits) in medium range, 2X mode	67		91	µA	LSB = 300 nA typical 2X output stage
$I_{DAC1CRT32}$	Output current of IDAC1(7 bits) in high range, 2X mode. V_{DDA} > 2 V	540		730	µA	LSB = 2.4 µA typical 2X output stage
$I_{DAC2CRT1}$	Output current of IDAC2 (7 bits) in low range	4.2		5.7	µA	LSB = 37.5 nA typical
$I_{DAC2CRT2}$	Output current of IDAC2 (7 bits) in medium range	33.7		45.6	µA	LSB = 300 nA typical
$I_{DAC2CRT3}$	Output current of IDAC2 (7 bits) in high range	270		365	µA	LSB = 2.4 µA typical
$I_{DAC2CRT12}$	Output current of IDAC2 (7 bits) in low range, 2X mode	8		11.4	µA	LSB = 37.5 nA typical 2X output stage
$I_{DAC2CRT22}$	Output current of IDAC2(7 bits) in medium range, 2X mode	67		91	µA	LSB = 300 nA typical 2X output stage
$I_{DAC2CRT32}$	Output current of IDAC2(7 bits) in high range, 2X mode. V_{DDA} > 2 V	540		730	µA	LSB = 2.4 µA typical 2X output stage
$I_{DAC3CRT13}$	Output current of IDAC in 8-bit mode in low range	8		11.4	µA	LSB = 37.5 nA typical
$I_{DAC3CRT23}$	Output current of IDAC in 8-bit mode in medium range	67		91	µA	LSB = 300 nA typical
$I_{DAC3CRT33}$	Output current of IDAC in 8-bit mode in high range. V_{DDA} > 2 V	540		730	µA	LSB = 2.4 µA typical
$I_{DACOFFSET}$	All zeros input	–	–	1	LSB	Polarity set by Source or Sink
$I_{DACGAIN}$	Full-scale error less offset	–	–	±15	%	LSB = 2.4 µA typical
$I_{DACMISMATCH1}$	Mismatch between IDAC1 and IDAC2 in Low mode	–	–	9.2	LSB	LSB = 37.5 nA typical
$I_{DACMISMATCH2}$	Mismatch between IDAC1 and IDAC2 in Medium mode	–	–	6	LSB	LSB = 300 nA typical
$I_{DACMISMATCH3}$	Mismatch between IDAC1 and IDAC2 in High mode	–	–	5.8	LSB	LSB = 2.4 µA typical
$I_{DACSET8}$	Settling time to 0.5 LSB for 8-bit IDAC	–	–	10	µs	Full-scale transition. No external load
$I_{DACSET7}$	Settling time to 0.5 LSB for 7-bit IDAC	–	–	10	µs	Full-scale transition. No external load
CMOD	External modulator capacitor	–	2.2	–	nF	5-V rating, X7R or NP0 capacitor

Table 28 CSD ADC specifications

Parameter	Description	Min	Typ	Max	Unit	Details/conditions
CSDv2 ADC specifications						
A_RES	Resolution	–	–	10	bits	Auto-zeroing is required every millisecond
A_CHNLS_S	Number of channels - single ended	–	–	–	16	
A-MONO	Monotonicity	–	–	Yes	–	V_{REF} mode
A_GAINERR_VREF	Gain error	–	0.6	–	%	Reference Source: SRSS (V_{REF} = 1.20 V, V_{DDA} < 2.2 V), (V_{REF} = 1.6 V, 2.2 V < V_{DDA}< 2.7 V), (V_{REF} = 2.13 V, V_{DDA}> 2.7 V)
A_GAINER-R_VDDA	Gain error	–	0.2	–	%	Reference Source: SRSS (V_{REF} = 1.20 V, V_{DDA}< 2.2 V), (V_{REF} = 1.6 V, 2.2 V < V_{DDA} < 2.7 V), (V_{REF} = 2.13 V, V_{DDA} > 2.7 V)
A_OFFSET_VREF	Input offset voltage	–	0.5	–	LSB	After ADC calibration, Ref. SRC = SRSS, (V_{REF} = 1.20 V, V_{DDA} < 2.2 V), (V_{REF}=1.6 V, 2.2 V < V_{DDA} < 2.7 V), (V_{REF} = 2.13 V, V_{DDA} > 2.7 V)
A_OFFSET_VDDA	Input offset voltage	–	0.5	–	LSB	After ADC calibration, Ref. SRC = SRSS, (V_{REF} = 1.20 V, V_{DDA} < 2.2 V), (V_{REF} = 1.6 V, 2.2 V< V_{DDA} < 2.7 V), (V_{REF} = 2.13 V, V_{DDA} > 2.7 V)
A_ISAR_VREF	Current consumption	–	0.3	–	mA	CSD ADC Block current
A_ISAR_VDDA	Current consumption	–	0.3	–	mA	CSD ADC Block current
A_VINS_VREF	Input voltage range - single ended	V_{SSA}	–	V_{REF}	V	(V_{REF} = 1.20 V, V_{DDA} < 2.2 V), (V_{REF} = 1.6 V, 2.2 V <V_{DDA} < 2.7 V), (V_{REF} = 2.13 V, V_{DDA} > 2.7 V)
A_VINS_VDDA	Input voltage range - single ended	V_{SSA}	–	V_{DDA}	V	(V_{REF} = 1.20 V, V_{DDA} < 2.2 V), (V_{REF} = 1.6 V, 2.2 V< V_{DDA} < 2.7 V), (V_{REF} = 2.13 V, V_{DDA} > 2.7 V)
A_INRES	Input charging resistance	–	15	–	kΩ	–
A_INCAP	Input capacitance	–	41	–	pF	–
A_PSRR	Power supply rejection ratio (DC)	–	60	–	dB	–
A_TACQ	Sample acquisition time	–	10	–	µs	Measured with 50 Ω source impedance. 10 µs is default software driver acquisition time setting. Settling to within 0.05%.
A_CONV8	Conversion time for 8-bit resolution at conversion rate = $F_{hclk}/(2 \times (N+2))$. Clock frequency = 50 MHz.	–	25	–	µs	Does not include acquisition time

Table 28 CSD ADC specifications *(continued)*

Parameter	Description	Min	Typ	Max	Unit	Details/conditions
A_CONV10	Conversion time for 10-bit resolution at conversion rate = $F_{hclk}/(2 \times (N + 2))$. Clock frequency = 50 MHz.	–	60	–	µs	Does not include acquisition time
A_SND_VRE	Signal-to-noise and Distortion ratio (SINAD)	–	57	–	dB	Measured with 50 Ω source impedance
A_SND_VDDA	SINAD	–	52	–	dB	Measured with 50 Ω source impedance
A_INL_VREF	Integral nonlinearity – 11.6 ksps	–	–	2	LSB	Measured with 50 Ω source impedance
A_INL_VDDA	Integral nonlinearity – 11.6 ksps	–	–	2	LSB	Measured with 50 Ω source impedance
A_DNL_VREF	Differential nonlinearity –11.6 ksps	–	–	1	LSB	Measured with 50 Ω source impedance
A_DNL_VDDA	Differential nonlinearity – 11.6 ksps	–	–	1	LSB	Measured with 50 Ω source impedance

7.3 Digital peripherals

Table 29 Timer/Counter/PWM (TCPWM) specifications

Parame-ter	Description	Min	Typ	Max	Unit	Details/conditions
I_{TCPWM1}	Block current consumption at 8 MHz	–	–	70	µA	All modes (TCPWM)
I_{TCPWM2}	Block current consumption at 24 MHz	–	–	180	µA	All modes (TCPWM)
I_{TCPWM3}	Block current consumption at 50 MHz	–	–	270	µA	All modes (TCPWM)
I_{TCPWM4}	Block current consumption at 100 MHz	–	–	540	µA	All modes (TCPWM)
$TCPWM_{FREQ}$	Operating frequency	–	–	100	MHz	$F_{cmax} = F_{cpu}$ Maximum = 100 MHz
$TPWM_{ENEXT}$	Input trigger pulse width for all trigger events	$2/F_c$	–	–	ns	Trigger Events can be Stop, Start, Reload, Count, Capture, or Kill depending on which mode of operation is selected
$TPWM_{EXT}$	Output trigger pulse widths	$1.5/F_c$	–	–	ns	Minimum possible width of Overflow, Underflow, and CC (Counter equals Compare value) trigger outputs
TC_{RES}	Resolution of counter	$1/F_c$	–	–	ns	Minimum time between successive counts
PWM_{RES}	PWM resolution	$1/F_c$	–	–	ns	Minimum pulse width of PWM output
Q_{RES}	Quadrature inputs resolution	$2/F_c$	–	–	ns	Minimum pulse width between Quadrature phase inputs. Delays from pins should be similar

Table 30 Serial Communication Block (SCB) specifications

Parameter	Description	Min	Typ	Max	Unit	Details/conditions
Fixed I²C DC specifications						
I_{I2C1}	Block current consumption at 100 kHz	–	–	30	µA	–
I_{I2C2}	Block current consumption at 400 kHz	–	–	80	µA	–
I_{I2C3}	Block current consumption at 1 Mbps	–	–	180	µA	–
I_{I2C4}	I²C enabled in Deep Sleep mode	–	–	1.7	µA	At 60°C
Fixed I²C AC specifications						
F_{I2C1}	Bit Rate	–	–	1	Mbps	–
Fixed UART DC specifications						
I_{UART1}	Block current consumption at 100 Kbps	–	–	30	µA	–
I_{UART2}	Block current consumption at 1000 Kbps	–	–	180	µA	–
Fixed UART AC specifications						
F_{UART1}	Bit Rate	–	–	3	Mbps	ULP mode
F_{UART2}		–	–	8		LP mode
Fixed SPI DC specifications						
I_{SPI1}	Block current consumption at 1 Mbps	–	–	220	µA	–
I_{SPI2}	Block current consumption at 4 Mbps	–	–	340	µA	–
I_{SPI3}	Block current consumption at 8 Mbps	–	–	360	µA	–
I_{SP14}	Block current consumption at 25 Mbps	–	–	800	µA	–
Fixed SPI AC specifications for LP Mode (1.1 V) unless noted otherwise						
F_{SPI}	SPI operating frequency Master and externally clocked slave	–	–	25	MHz	14-MHz maximum for ULP (0.9 V) mode
F_{SPI_IC}	SPI Slave internally clocked	–	–	15	MHz	5 MHz maximum for ULP (0.9 V) mode
Fixed SPI Master mode AC specifications for LP Mode (1.1 V) unless noted otherwise						
T_{DMO}	master out, slave in (MOSI) valid after SClock driving edge	–	–	12	ns	20 ns maximum for ULP (0.9 V) mode
T_{DSI}	MISO valid before SClock capturing edge	5	–	–	ns	Full clock, late master in, slave out (MISO) sampling
T_{HMO}	MOSI data hold time	0	–	–	ns	Referred to slave capturing edge
Fixed SPI Slave mode AC specifications for LP Mode (1.1 V) unless noted otherwise						
T_{DMI}	MOSI valid before Sclock capturing edge	5	–	–	ns	–
T_{DSO_EXT}	MISO valid after Sclock driving edge in external clock mode	–	–	20	ns	35 ns maximum for ULP (0.9 V) mode
T_{DSO}	MISO valid after Sclock driving edge in internal clock mode	–	–	$T_{DSO_EXT} + 3 * T_{scb}$	ns	T_{scb} is SCB clock period
T_{DSO}	MISO valid after Sclock driving edge in internal clock mode with median filter enabled	–	–	$T_{DSO_EXT} + 4 * T_{scb}$	ns	T_{scb} is SCB clock period
T_{HSO}	Previous MISO data hold time	5	–	–	ns	–

Table 30 Serial Communication Block (SCB) specifications *(continued)*

Parameter	Description	Min	Typ	Max	Unit	Details/conditions
$TSSEL_{SCK1}$	SSEL valid to first SCK valid edge	65	–	–	ns	–
$TSSEL_{SCK2}$	SSEL hold after Last SCK valid edge	65	–	–	ns	–

7.3.1 LCD specifications

Table 31 LCD direct drive DC specifications

Parameter	Description	Min	Typ	Max	Unit	Details/conditions
I_{LCDLOW}	Operating current in low-power mode	–	5	–	µA	16 x 4 small segment display at 50 Hz
C_{LCDCAP}	LCD capacitance per segment/common driver	–	500	5000	pF	–
LCD_{OFFSET}	Long-term segment offset	–	20	–	mV	–
I_{LCDOP1}	PWM mode current. 3.3-V bias. 8-MHz IMO. 25°C.	–	0.6	–	mA	32 x 4 segments 50 Hz
I_{LCDOP2}	PWM mode current. 3.3-V bias. 8-MHz IMO. 25°C.	–	0.5	–	mA	32 x 4 segments 50 Hz

Table 32 LCD direct drive AC specifications

Parameter	Description	Min	Typ	Max	Unit	Details/conditions
F_{LCD}	LCD frame rate	10	50	150	Hz	–

7.4 Memory

Table 33 Flash specifications

Parameter	Description	Min	Typ	Max	Unit	Details/conditions
Flash DC specifications						
VPE	Erase and program voltage	1.71	–	3.6	V	–
Flash AC specifications						
$T_{ROWWRITE}$	Row (Block) write time (erase & program)	–	–	16	ms	Row (Block) = 512 bytes
$T_{ROWERASE}$	Row erase time	–	–	11	ms	–
$T_{ROWPROGRAM}$	Row program time after erase	–	–	5	ms	–
$T_{BULKERASE}$	Bulk erase time (1024 KB)	–	–	11	ms	–
$T_{SECTORERASE}$	Sector erase time (256 KB)	–	–	11	ms	512 rows per sector
$T_{SSERIAE}$	Sub-sector erase time	–	–	11	ms	8 rows per sub-sector
$T_{SSWRITE}$	Sub-sector write time; 1 erase plus 8 program times	–	–	51	ms	–
T_{SWRITE}	Sector write time; 1 erase plus 512 program times	–	–	2.6	seconds	–
$T_{DEVPROG}$	Total device program time	–	–	15	seconds	–
F_{END}	Flash Endurance	100 K	–	–	cycles	–
F_{RET1}	Flash Retention. Ta ≤ 25°C, 100 K P/E cycles	10	–	–	years	–
F_{RET2}	Flash Retention. Ta ≤ 85°C, 10 K P/E cycles	10	–	–	years	–
F_{RET3}	Flash Retention. Ta ≤ 55°C, 20 K P/E cycles	20	–	–	years	–
T_{WS100}	Number of Wait states at 100 MHz	3	–	–	–	–
T_{WS50}	Number of Wait states at 50 MHz	2	–	–	–	–

Note

9. It can take as much as 16 ms to write to flash. During this time, the device should not be reset, or flash operations will be interrupted and cannot be relied on to have completed. Reset sources include the XRES pin, software resets, CPU lockup states and privilege violations, improper power supply levels, and watchdog. Make certain that these are not inadvertently activated.

7.5 System resources

Table 34 CYBLE-416070-02 system resources

Parameter	Description	Min	Typ	Max	Unit	Details/conditions
POR with brownout DC specifications						
Precise POR (PPOR)						
$V_{FALLPPOR}$	BOD trip voltage in Active and Sleep modes, V_{DDD}	1.54	–	–	V	BOD Reset guaranteed for levels below 1.54 V
$V_{FALLDPSLP}$	BOD trip voltage in Deep Sleep, V_{DDD}	1.54	–	–	V	–
V_{DDRAMP}	Maximum power supply ramp rate (any supply)	–	–	100	mV/µs	Active mode
POR with brownout AC specification						
V_{DDRAMP_DS}	Maximum power supply ramp rate (any supply) in Deep Sleep	–	–	10	mV/µs	BOD operation guaranteed
Voltage monitors DC specifications						
V_{HVD0}	–	1.18	1.23	1.27	V	–
V_{HVDI1}	–	1.38	1.43	1.47	V	–
V_{HVDI2}	–	1.57	1.63	1.68	V	–
V_{HVDI3}	–	1.76	1.83	1.89	V	–
V_{HVDI4}	–	1.95	2.03	2.1	V	–
V_{HVDI5}	–	2.05	2.13	2.2	V	–
V_{HVDI6}	–	2.15	2.23	2.3	V	–
V_{HVDI7}	–	2.24	2.33	2.41	V	–
V_{HVDI8}	–	2.34	2.43	2.51	V	–
V_{HVDI9}	–	2.44	2.53	2.61	V	–
V_{HVDI10}	–	2.53	2.63	2.72	V	–
V_{HVDI11}	–	2.63	2.73	2.82	V	–
V_{HVDI12}	–	2.73	2.83	2.92	V	–
V_{HVDI13}	–	2.82	2.93	3.03	V	–
V_{HVDI14}	–	2.92	3.03	3.13	V	–
V_{HVDI15}	–	3.02	3.13	3.23	V	–
LVI_IDD	Block current	–	5	15	µA	–
Voltage monitors AC specification						
$T_{MONTRIP}$	Voltage monitor trip time	–	–	170	ns	–

7.5.1 SWD interface

Table 35 SWD and trace specifications

Parameter	Description	Min	Typ	Max	Unit	Details/conditions
SWD and trace interface						
F_SWDCLK2	1.71 V ≤ V_{DDD} ≤ 3.6 V	–	–	25	MHz	LP mode. V_{CCD} = 1.1 V
F_SWDCLK2L	1.71 V ≤ V_{DDD} ≤ 3.6 V	–	–	12	MHz	ULP mode. V_{CCD} = 0.9 V.
T_SWDI_SETUP	T = 1/f SWDCLK	0.25 * T	–	–	ns	–
T_SWDI_HOLD	T = 1/f SWDCLK	0.25 * T	–	–	ns	–
T_SWDO_VALID	T = 1/f SWDCLK	–	–	0.5 * T	ns	–
T_SWDO_HOLD	T = 1/f SWDCLK	1	–	–	ns	–
F_TRCLK_LP1	With Trace Data setup/hold times of 2/1 ns respectively	–	–	75	MHz	LP mode. V_{DD} = 1.1 V
F_TRCLK_LP2	With Trace Data setup/hold times of 3/2 ns respectively	–	–	70	MHz	LP mode. V_{DD} = 1.1 V
F_TRCLK_ULP	With Trace Data setup/hold times of 3/2 ns respectively	–	–	25	MHz	ULP mode. V_{DD} = 0.9 V

7.5.2 Internal main oscillator

Table 36 IMO DC specifications

Parameter	Description	Min	Typ	Max	Unit	Details/conditions
I_{IMO1}	IMO operating current at 8 MHz	–	9	15	µA	–

Table 37 IMO AC specifications

Parameter	Description	Min	Typ	Max	Unit	Details/conditions
$F_{IMOTOL1}$	Frequency variation centered on 8 MHz	–	–	±2	%	–
T_{JITR}	Cycle-to-Cycle and Period jitter	–	250	–	ps	–

7.5.3 Internal low-speed oscillator

Table 38 ILO DC specification

Parameter	Description	Min	Typ	Max	Unit	Details/conditions
I_{ILO2}	ILO operating current at 32 kHz	–	0.3	0.7	µA	–

Table 39 ILO AC specifications

Parameter	Description	Min	Typ	Max	Unit	Details/conditions
$T_{STARTILO1}$	ILO startup time	–	–	7	µs	Startup time to 95% of final frequency
$T_{LIODUTY}$	ILO duty cycle	45	50	55	%	–
$F_{ILOTRIM1}$	32-kHz trimmed frequency	28.8	32	35.2	kHz	±10% variation

Table 40 UDB AC specifications

Parameter	Description	Min	Typ	Max	Unit	Details/conditions
Data path performance						
$F_{MAX-TIMER}$	Maximum frequency of 16-bit timer in a UDB pair	–	–	100	MHz	–
$F_{MAX-ADDER}$	Maximum frequency of 16-bit adder in a UDB pair	–	–	100	MHz	–
F_{MAX_CRC}	Maximum frequency of 16-bit CRC/PRS in a UDB pair	–	–	100	MHz	–
PLD performance in UDB						
F_{MAX_PLD}	Maximum frequency of 2-pass PLD function in a UDB pair	–	–	100	MHz	–
Clock to output performance						
$T_{CLK_OUT_UDB1}$	Propagation delay for clock in to data out	–	5	–	ns	–
UDB port adapter specifications						
Conditions: 10-pF load, 3-V V_{DDIO} and V_{DDD}						
T_{LCLKDO}	L_{CLK} to output delay	–	–	11	ns	–
$T_{DINLCLK}$	Input setup time to L_{CLCK} rising edge	–	–	7	ns	–
$T_{DINLCLKHLD}$	Input hold time from L_{CLK} rising edge	5	–	–	ns	–
$T_{LCLKHIZ}$	L_{CLK} to output tristate	–	–	28	ns	–
T_{FLCLK}	L_{CLK} frequency	–	–	33	MHz	–
$T_{LCLKDUTY}$	L_{CLK} duty cycle (percentage high)	40%	–	60%	%	–

Table 41 Audio subsystem specifications

Parameter	Description	Min	Typ	Max	Unit	Details/conditions
Audio subsystem specifications						
PDM specifications						
PDM_IDD1	PDM active current, Stereo operation, 1-MHz clock	–	175	–	µA	16-bit audio at 16 ksps
PDM_IDD2	PDM active current, Stereo operation, 3-MHz clock	–	600	–	µA	24-bit audio at 48 ksps
PDM_JITTER	RMS jitter in PDM clock	–200	–	200	ps	
PDM_CLK	PDM clock speed	0.384	–	3.072	MHz	
PDM_BLK_CLK	PDM block input clock	1.024	–	49.152	MHz	
PDM_SETUP	Data input setup time to PDM_CLK edge	10	–	–	ns	
PDM_HOLD	Data input hold time to PDM_CLK edge	10	–	–	ns	
PDM_OUT	Audio sample rate	8	–	48	ksps	
PDM_WL	Word length	16	–	24	bits	

Table 41 Audio subsystem specifications *(continued)*

Parameter	Description	Min	Typ	Max	Unit	Details/conditions
PDM_SNR	Signal-to-noise ratio (A-weighted)	–	100	–	dB	PDM input, 20 Hz to 20 kHz BW
PDM_DR	Dynamic range (A-weighted)	–	100	–	dB	20 Hz to 20 kHz BW, -60 dB FS
PDM_FR	Frequency response	–0.2	–	0.2	dB	DC to 0.45. DC Blocking filter OFF
PDM_SB	Stop band	–	0.566	–	f	–
PDM_SBA	Stop band attenuation	–	60	–	dB	–
PDM_GAIN	Adjustable gain	–12	–	10.5	dB	PDM to PCM, 1.5 dB/step
PDM_ST	Startup time	–	48	–	–	Word Select (WS) cycles
I2S specifications (same for LP and ULP modes unless stated otherwise)						
I^2S_WORD	Length of I^2S word	8	–	32	bits	–
I^2S_WS	Word clock frequency in LP mode	–	–	192	kHz	12.288 MHz bit clock with 32-bit word
I^2S_WS_U	Word clock frequency in ULP mode	–	–	48	kHz	3.072 MHz bit clock with 32-bit word
I^2S_WS_TDM	Word clock frequency in TDM mode for LP	–	–	48	kHz	8 32-bit channels
I^2S_WS_TDM_U	Word clock frequency in TDM mode for ULP	–	–	12	kHz	8 32-bit channels
I2S Slave mode						
TS_WS	WS setup time to the following rising edge of SCK for LP mode	5	–	–	ns	–
TS_WS	WS setup time to the following rising edge of SCK for ULP mode	11	–	–	ns	–
TH_WS	WS hold time to the following edge of SCK	TMCLK_SOC + 5	–	–	ns	–
TD_SDO	Delay time of TX_SDO transition from edge of TX_SCK for LP mode	-(TMCLK_SOC + 25)	–	TMCLK_SOC+ 25	ns	Associated clock edge depends on selected polarity
TD_SDO	Delay time of TX_SDO transition from edge of TX_SCK for ULP mode	-(TMCLK_SOC + 70)	–	TMCLK_SOC+ 70	ns	Associated clock edge depends on selected polarity
TS_SDI	RX_SDI setup time to the following edge of RX_SCK in LP mode	5	–	–	ns	–
TS_SDI	RX_SDI setup time to the following edge of RX_SCK in ULP mode	11	–	–	ns	–
TH_SDI	RX_SDI hold time to the rising edge of RX_SCK	TMCLK_SOC + 5	–	–	ns	–
T_{SCKCY}	TX/RX_SCK bit clock duty cycle	45	–	55	%	–
I^2S Master mode						

Table 41 Audio subsystem specifications *(continued)*

Parameter	Description	Min	Typ	Max	Unit	Details/conditions
TD_WS	WS transition delay from falling edge of SCK in LP mode	–10	–	20	ns	–
TD_WS_U	WS transition delay from falling edge of SCK in ULP mode	–10	–	40	ns	–
TD_SDO	SDO transition delay from falling edge of SCK in LP mode	–10	–	20	ns	–
TD_SDO	SDO transition delay from falling edge of SCK in ULP mode	–10	–	40	ns	–
TS_SDI	SDI setup time to the associated edge of SCK	5	–	–	ns	Associated clock edge depends on selected polarity
TH_SDI	SDI hold time to the associated edge of SCK	TMCLK_SOC + 5	–	–	ns	T is TX/RX_SCK bit clock period. Associated clock edge depends on selected polarity
T_{SCKCY}	SCK bit clock duty cycle	45	–	55	%	–
FMCLK_SOC	MCLK_SOC frequency in LP mode	1.024	–	98.304	MHz	FMCLK_SOC = 8 * Bit-clock
FMCLK_SOC_U	MCLK_SOC frequency in ULP mode	1.024	–	24.576	MHz	FMCLK_SOC_U = 8 * Bit-clock
T_{MCLKCY}	MCLK_SOC duty cycle	45	–	55	%	–
T_{JITTER}	MCLK_SOC input jitter	–100	–	100	ps	–

Table 42 Smart I/O specifications

Parameter	Description	Min	Typ	Max	Unit	Details/Conditions
SMIO_BYP	Smart I/O bypass delay	–	–	2	ns	–
SMIO_LUT	Smart I/O LUT prop delay	–	TBD	–	ns	–

Table 43 Bluetooth® LE subsystem specifications

Parameter	Description	Min	Typ	Max	Unit	Details/conditions
Bluetooth® LE subsystem specifications						
RF receiver specifications (1 Mbps)						
RXS, IDLE	RX Sensitivity with Ideal Transmitter	–	–95	–	dBm	Across RF operating frequency range
RXS, IDLE	RX Sensitivity with Ideal Transmitter	–	–93	–	dBm	255-byte packet length, across frequency range
RXS, DIRTY	RX Sensitivity with Dirty Transmitter	–	–92	–	dBm	RF-PHY Specification (RCV-LE/CA/01/C)
PRX_{MAX}	Maximum received signal strength at < 0.1% PER	–	0	–	dBm	RF-PHY Specification (RCV-LE/CA/06/C)
CI1	Co-channel interference, Wanted Signal at –67 dBm and Interferer at FRX	–	9	21	dB	RF-PHY Specification (RCV-LE/CA/03/C)

Table 43 Bluetooth® LE subsystem specifications *(continued)*

Parameter	Description	Min	Typ	Max	Unit	Details/conditions
CI2	Adjacent channel interference Wanted Signal at –67 dBm and Interferer at FRX ± 1 MHz	–	3	15	dB	RF-PHY Specification (RCV-LE/CA/03/C)
CI3	Adjacent channel interference Wanted Signal at –67 dBm and Interferer at FRX ± 2 MHz	–	–26	–17	dB	RF-PHY Specification (RCV-LE/CA/03/C)
CI4	Adjacent channel interference Wanted Signal at –67 dBm and Interferer at ≥ FRX ± 3 MHz	–	–33	–27	dB	RF-PHY Specification (RCV-LE/CA/03/C)
CI5	Adjacent channel interference Wanted Signal at –67 dBm and Interferer at Image frequency (FIMAGE)	–	–20	–9	dB	RF-PHY Specification (RCV-LE/CA/03/C)
CI6	Adjacent channel interference Wanted Signal at –67 dBm and |Interferer at Image frequency (FIMAGE ± 1 MHz)	–	–28	–15	dB	RF-PHY Specification (RCV-LE/CA/03/C)
RF receiver specifications (2 Mbps)						
RXS, IDLE	RX Sensitivity with Ideal Transmitter	–	–92	–	dBm	Across RF operating frequency range
RXS, IDLE	RX Sensitivity with Ideal Transmitter	–	–90	–	dBm	255-byte packet length, across frequency range
RXS, DIRTY	RX Sensitivity with Dirty Transmitter	–	–89	–	dBm	RF-PHY Specification (RCV-LE/CA/01/C)
PRX_{MAX}	Maximum received signal strength at < 0.1% PER	–	0	–	dBm	RF-PHY Specification (RCV-LE/CA/06/C)
CI1	Co-channel interference, Wanted Signal at –67 dBm and Interferer at FRX	–	9	21	dB	RF-PHY Specification (RCV-LE/CA/03/C)
CI2	Adjacent channel interference Wanted Signal at –67 dBm and Interferer at FRX ± 2 MHz	–	3	15	dB	RF-PHY Specification (RCV-LE/CA/03/C)
CI3	Adjacent channel interference Wanted Signal at –67 dBm and Interferer at FRX ± 4 MHz	–	-26	–17	dB	RF-PHY Specification (RCV-LE/CA/03/C)
CI4	Adjacent channel interference Wanted Signal at –67 dBm and Interferer at ,â• FRX ± 6 MHz	–	–33	–27	dB	RF-PHY Specification (RCV-LE/CA/03/C)
CI5	Adjacent channel interference Wanted Signal at –67 dBm and Interferer at Image frequency (FIMAGE)	–	–20	–9	dB	RF-PHY Specification (RCV-LE/CA/03/C)
CI6	Adjacent channel interference Wanted Signal at –67 dBm and Interferer at Image frequency (FIMAGE ± 2 MHz)	–	–28	–15	dB	RF-PHY Specification (RCV-LE/CA/03/C)
RF receiver specification (1 and 2 Mbps)						

Table 43 Bluetooth® LE subsystem specifications *(continued)*

Parameter	Description	Min	Typ	Max	Unit	Details/conditions
OBB1	Out of Band blocking Wanted Signal at –67 dBm and Interferer at F = 30 -2000 MHz	–30	–27	–	dBm	RF-PHY Specification (RCV-LE/CA/04/C)
OBB2	Out of Band blocking Wanted Signal at –67 dBm and Interferer at F = 2003 -2399 MHz	–35	–27	–	dBm	RF-PHY Specification (RCV-LE/CA/04/C)
OBB3	Out of Band blocking Wanted Signal at –67 dBm and Interferer at F= 2484-2997 MHz	–35	–27	–	dBm	RF-PHY Specification (RCV-LE/CA/04/C)
OBB4	Out of Band blocking Wanted Signal at –67 dBm and Interferer at F= 3000-12750 MHz	–30	–27	–	dBm	RF-PHY Specification (RCV-LE/CA/04/C)
IMD	Intermodulation performance Wanted Signal at –64 dBm and 1 Mbps Bluetooth® LE, 3rd, 4th and 5th offset channel	–50	–	–	dBm	RF-PHY Specification (RCV-LE/CA/05/C)
RXSE1	Receiver Spurious emission 30 MHz to 1.0 GHz	–	–	–57	dBm	100 kHz measurement bandwidth ETSI EN300 328 V2.1.1
RXSE2	Receiver Spurious emission 1.0 GHz to 12.75 GHz	–	–	–53	dBm	1 MHz measurement bandwidth ETSI EN300 328 V2.1.1
RF transmitter specifications						
TXP, ACC	RF Power Accuracy	–	–	1	dB	–
TXP, RANGE	Frequency Accuracy	–	24	–	dB	–20 dBm to +4 dBm
TXP, 0 dBm	Output Power, 0 dB Gain Setting	–	0	–	dBm	–
TXP, MAX	Output Power, Maximum Power Setting	–	4	–	dBm	–
TXP, MIN	Output Power, Minimum Power Setting	–	–20	–	dBm	–
F2AVG	Average Frequency Deviation for 10101010 pattern	185	–	–	kHz	RF-PHY Specification (TRM-LE/CA/05/C)
F2AVG_2M	Average Frequency Deviation for 10101010 pattern for 2 Mbps	370	–	–	kHz	RF-PHY Specification (TRM-LE/CA/05/C)
F1AVG	Average Frequency Deviation for 11110000 pattern	225	250	275	kHz	RF-PHY Specification (TRM-LE/CA/05/C)
F1AVG_2M	Average Frequency Deviation for 11110000 pattern for 2 Mbps	450	500	550	kHz	RF-PHY Specification (TRM-LE/CA/05/C)
EO	Eye opening = ΔF2AVG/ΔF1AVG	0.8	–	–	–	RF-PHY Specification (TRM-LE/CA/05/C)
FTX, ACC	Frequency Accuracy	–150	–	150	kHz	RF-PHY Specification (TRM-LE/CA/06/C)

Table 43 Bluetooth® LE subsystem specifications *(continued)*

Parameter	Description	Min	Typ	Max	Unit	Details/conditions
FTX, MAXDR	Maximum Frequency Drift	–50	–	50	kHz	RF-PHY Specification (TRM-LE/CA/06/C)
FTX, INITDR	Initial Frequency Drift	–20	–	20	kHz	RF-PHY Specification (TRM-LE/CA/06/C)
FTX, DR	Maximum Drift Rate	–20	–	20	kHz/ 50 µs	RF-PHY Specification (TRM-LE/CA/06/C)
IBSE1	In Band Spurious Emission at 2 MHz offset (1 Mbps) In Band Spurious Emission at 4 MHz offset (2 Mbps)	–	–	–20	dBm	RF-PHY Specification (TRM-LE/CA/03/C)
IBSE2	In Band Spurious Emission at 3 MHz offset (1 Mbps) In Band Spurious Emission at 6 MHz offset (2 Mbps)	–	–	–30	dBm	RF-PHY Specification (TRM-LE/CA/03/C)
TXSE1	Transmitter Spurious Emissions (Averaging), < 1.0 GHz	–	–	–55.5	dBm	FCC-15.247
TXSE2	Transmitter Spurious Emissions (Averaging), > 1.0 GHz			–41.5	dBm	FCC-15.247
General RF specification						
FREQ	RF Operating Frequency	2400	–	2482	MHz	–
CHBW	Channel Spacing	–	2	–	MHz	–
DR1	On-air Data Rate (1 Mbps)	–	1000	–	Kbps	–
DR2	On-air Data Rate (2 Mbps)	–	2000	–	Kbps	–
TXSUP	Transmitter Startup time	–	80	82	µs	–
RXSUP	Receiver Startup time	–	80	82	µs	–
RSSI specification						
RSSI, ACC	RSSI Accuracy	–4	–	4	dB	–95 dBm to –20 dBm measurement range
RSSI, RES	RSSI Resolution	–	1	–	dB	–
RSSI, PER	RSSI Sample Period	–	6	–	µs	–

Table 44 Precision ILO (PILO) specifications

Parameter	Description	Min	Typ	Max	Unit	Details/conditions
I_{PILO}	Operating current	–	1.2	4	µA	–
F_PILO	PILO nominal frequency	–	32768	–	Hz	T = 25°C with 20 ppm crystal
ACC_PILO	PILO accuracy with periodic calibration	–500	–	500	ppm	–

8 Environmental specifications

8.1 Environmental compliance

This Infineon Bluetooth® LE module is built in compliance with RoHS and Halogen Free (HF) directives. The Infineon module and components used to produce this module are RoHS and HF compliant.

8.2 RF certification

The CYBLE-416070-02 module is certified under the following RF certification standards:

- FCC ID: WAP6045
- CE
- ISED: 7922A-6045
- MIC: 201-180370

8.3 Environmental conditions

Table 45 describes the operating and storage conditions for the Infineon Bluetooth® LE module.

Table 45 Environmental conditions for CYBLE-416070-02

Description	Minimum specification	Maximum specification
Operating temperature	–40°C	85°C
Operating humidity (relative, non-condensation)	5%	85%
Thermal ramp rate	–	3°C/minute
Storage temperature	–40°C	85°C
Storage temperature and humidity	–	85° C at 85%
ESD: Module integrated into system components[10]	–	15 kV Air 2.2 KV Contact

8.4 ESD and EMI protection

Exposed components require special attention to ESD and EMI.

A grounded conductive layer inside the device enclosure is suggested for EMI and ESD performance. Any openings in the enclosure near the module should be surrounded by a grounded conductive layer to provide ESD protection and a low-impedance path to ground.

Device handling: Proper ESD protocol must be followed in manufacturing to ensure component reliability.

Note

10. This does not apply to the RF pins (ANT, XTALI, and XTALO). RF pins (ANT, XTALI, and XTALO) are tested for 500 V HBM.

9 Regulatory information

9.1 FCC

FCC NOTICE:

The device CYBLE-416070-02 complies with Part 15 of the FCC Rules. The device meets the requirements for modular transmitter approval as detailed in FCC public Notice DA00-1407. Transmitter Operation is subject to the following two conditions: (1) This device may not cause harmful interference, and (2) This device must accept any interference received, including interference that may cause undesired operation.

CAUTION:

The FCC requires the user to be notified that any changes or modifications made to this device that are not expressly approved by Infineon may void the user's authority to operate the equipment.

This equipment has been tested and found to comply with the limits for a Class B digital device, pursuant to Part 15 of the FCC Rules. These limits are designed to provide reasonable protection against harmful interference in a residential installation. This equipment generates and can radiate radio frequency energy and, if not installed and used in accordance with the instruction may cause harmful interference to radio communications. However, there is no guarantee that interference will not occur in a particular installation. If this equipment does cause harmful interference to radio or television reception, which can be determined by turning the equipment off and on, the user is encouraged to try to correct the interference by one or more of the following measures:

- Reorient or relocate the receiving antenna.
- Increase the separation between the equipment and receiver.
- Connect the equipment into an outlet on a circuit different from that to which the receiver is connected.
- Consult the dealer or an experienced radio/TV technician for help

LABELING REQUIREMENTS:

The Original Equipment Manufacturer (OEM) must ensure that FCC labeling requirements are met. This includes a clearly visible label on the outside of the OEM enclosure specifying the appropriate Infineon FCC identifier for this product as well as the FCC Notice above. The FCC identifier is FCC ID: WAP6045.

In any case the end product must be labeled exterior with “Contains FCC ID: WAP6045”.

ANTENNA WARNING:

This device is tested with a standard SMA connector and with the antennas listed in **Table 14**. When integrated in the OEMs product, these fixed antennas require installation preventing end-users from replacing them with non-approved antennas. Any antenna not in the following table must be tested to comply with FCC Section 15.203 for unique antenna connectors and Section 15.247 for emissions.

RF EXPOSURE:

To comply with FCC RF Exposure requirements, the OEM must ensure to install the approved antenna in the previous.

The preceding statement must be included as a CAUTION statement in manuals, for products operating with the approved antennas in **Table 14**, to alert users on FCC RF Exposure compliance. Any notification to the end user of installation or removal instructions about the integrated radio module is not allowed.

The radiated output power of CYBLE-416070-02 is far below the FCC radio frequency exposure limits. Nevertheless, use CYBLE-416070-02 in such a manner that minimizes the potential for human contact during normal operation.

End users may not be provided with the module installation instructions. OEM integrators and end users must be provided with transmitter operating conditions for satisfying RF exposure compliance.

9.2 ISED

Innovation, Science and Economic Development (ISED) Canada Certification

CYBLE-416070-02 is licensed to meet the regulatory requirements of Innovation, Science and Economic Development (ISED) Canada.

License: IC: 7922A-6045

Manufacturers of mobile, fixed or portable devices incorporating this module are advised to clarify any regulatory questions and ensure compliance for SAR and/or RF exposure limits. Users can obtain Canadian information on RF exposure and compliance from **www.ic.gc.ca**.

This device has been designed to operate with the antennas listed in **Table 14**, having a maximum gain of -0.5 dBi. Antennas not included in **Table 14**or having a gain greater than -0.5 dBi are strictly prohibited for use with this device. The required antenna impedance is 50 ohms. The antenna used for this transmitter must not be co-located or operating in conjunction with any other antenna or transmitter.

ISED NOTICE:

The device CYBLE-416070-02 including the built-in trace antenna complies with Canada RSS-GEN Rules. The device meets the requirements for modular transmitter approval as detailed in RSS-GEN. Operation is subject to the following two conditions: (1) This device may not cause harmful interference, and (2) This device must accept any interference received, including interference that may cause undesired operation.

L'appareil CYBLE-416070-02, y compris l'antenne intégrée, est conforme aux Règles RSS-GEN de Canada. L'appareil répond aux exigences d'approbation de l'émetteur modulaire tel que décrit dans RSS-GEN. L'opération est soumise aux deux conditions suivantes: (1) Cet appareil ne doit pas causer d'interférences nuisibles, et (2) Cet appareil doit accepter toute interférence reçue, y compris les interférences pouvant entraîner un fonctionnement indésirable.

ISED INTERFERENCE STATEMENT FOR CANADA

This device complies with Innovation, Science and Economic Development (ISED) Canada licence-exempt RSS standard(s). Operation is subject to the following two conditions: (1) this device may not cause interference, and (2) this device must accept any interference, including interference that may cause undesired operation of the device.

Cet appareil est conforme à la norme sur l'innovation, la science et le développement économique (ISED) norme RSS exempte de licence. L'exploitation est autorisée aux deux conditions suivantes : (1) l'appareil ne doit pas produire de brouillage, et (2) l'utilisateur de l'appareil doit accepter tout brouillage radioélectrique subi, même si le brouillage est susceptible d'en compromettre le fonctionnement.

ISED RADIATION EXPOSURE STATEMENT FOR CANADA

This equipment complies with ISED radiation exposure limits set forth for an uncontrolled environment.

Cet équipement est conforme aux limites d'exposition aux radiations ISED prévues pour un environnement incontrôlé.

LABELING REQUIREMENTS:

The Original Equipment Manufacturer (OEM) must ensure that ISED labelling requirements are met. This includes a clearly visible label on the outside of the OEM enclosure specifying the appropriate Infineon IC identifier for this product as well as the ISED Notices above. The IC identifier is 7922A-6045. In any case, the end product must be labeled in its exterior with “Contains IC: 7922A-6045”.

Le fabricant d'équipement d'origine (OEM) doit s'assurer que les exigences d'étiquetage ISED sont respectées. Cela comprend une étiquette clairement visible à l'extérieur de l'enceinte OEM spécifiant l'identifiant Infineon IC approprié pour ce produit ainsi que l'avis ISED ci-dessus. L'identificateur IC est 7922A-6045. En tout cas, le produit final doit être étiqueté dans son extérieur avec “Contient IC: 7922A-6045”.

9.3 European Declaration of Conformity

Hereby, Infineon declares that the Bluetooth® module CYBLE-416070-02 complies with the essential requirements and other relevant provisions of Directive 2014. As a result of the conformity assessment procedure described in Annex III of the Directive 2014, the end-customer equipment should be labeled as follows:

All versions of the CYBLE-416070-02 in the specified reference design can be used in the following countries: Austria, Belgium, Cyprus, Czech Republic, Denmark, Estonia, Finland, France, Germany, Greece, Hungary, Ireland, Italy, Latvia, Lithuania, Luxembourg, Malta, Poland, Portugal, Slovakia, Slovenia, Spain, Sweden, The Netherlands, the United Kingdom, Switzerland, and Norway.

9.4 MIC Japan

CYBLE-416070-02 is certified as a module with type certification number 201-180370. End products that integrate CYBLE-416070-02 do not need additional MIC Japan certification for the end product.

End product can display the certification label of the embedded module.

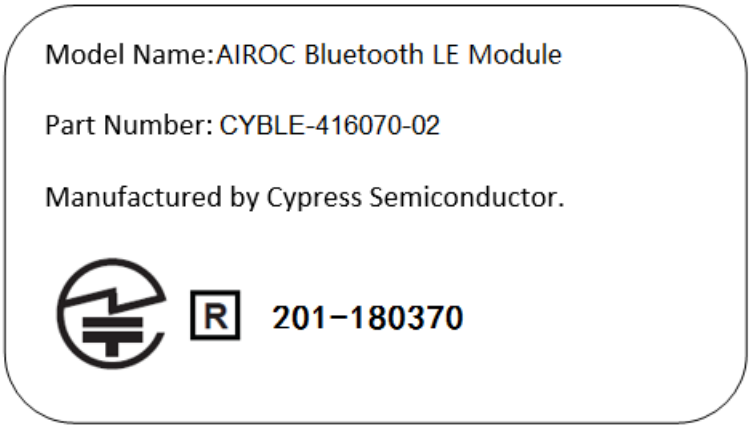

10 Packaging

Table 46 Solder reflow peak temperature

Module part number	Package	Maximum peak temperature	Maximum time at peak temperature	No. of cycles
CYBLE-416070-02	43-pad SMT	260 °C	30 seconds	2

Table 47 Package Moisture Sensitivity Level (MSL), IPC/JEDEC J-STD-2

Module part number	Package	MSL
CYBLE-416070-02	43-pad SMT	MSL 3

The CYBLE-416070-02 is offered in tape and reel packaging. **Figure 21** details the tape dimensions used for the CYBLE-416070-02.

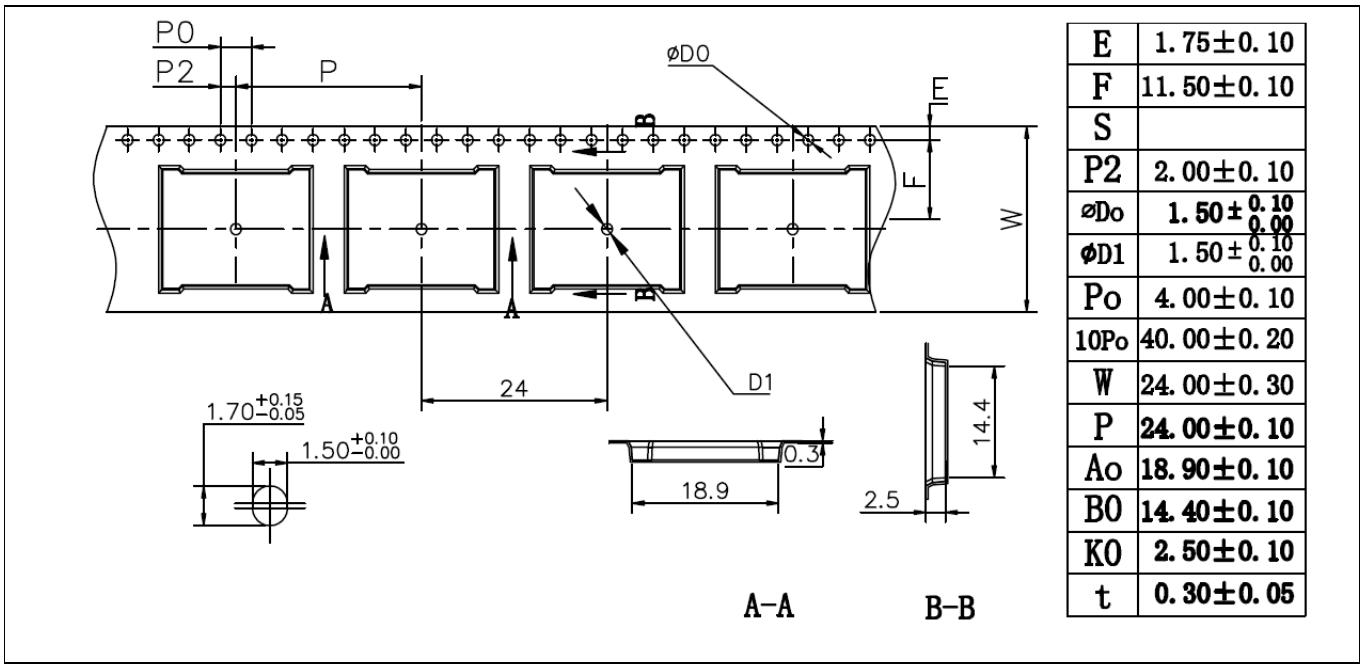

Figure 21 CYBLE-416070-02 tape dimensions

Figure 22 details the orientation of the CYBLE-416070-02 in the tape as well as the direction for unreeling.

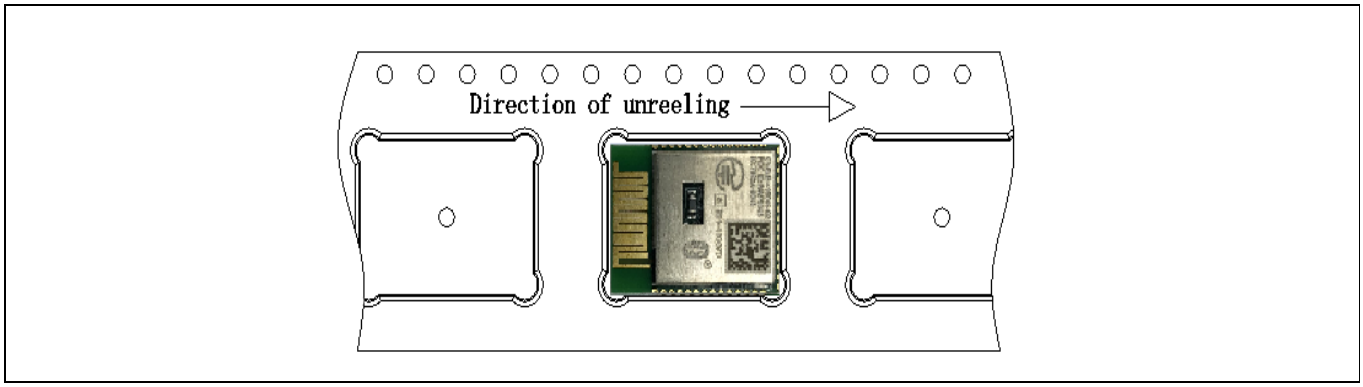

Figure 22 Component orientation in tape and unreeling direction

Figure 23 details reel dimensions used for the CYBLE-416070-02.

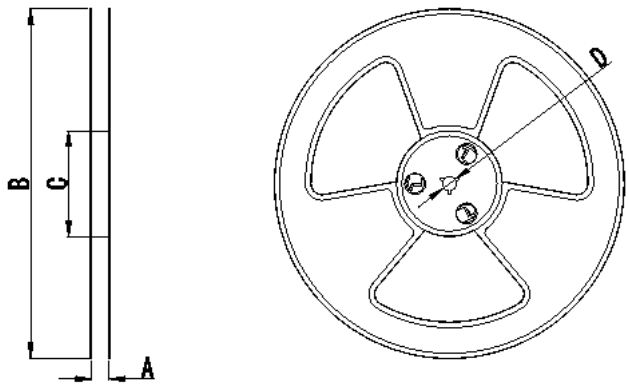

Index	NOTE	Dimension	Tolerance	
A	Inside Width	25.4	+3.0mm	-1.0mm
B	Reel Diameter	254.00	+2.0mm	-2.0mm
C	Outer Axis Diameter	100.00	+2.0mm	-2.0mm
D	Inner Axis Diameter	13.20	+0.3mm	-0.2mm

Figure 23 Reel dimensions

The CYBLE-416070-02 is designed to be used with pick-and-place equipment in an SMT manufacturing environment. The center-of-mass for the CYBLE-416070-02 is detailed in **Figure 24**.

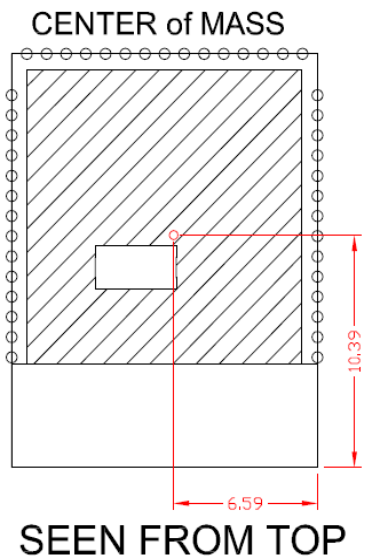

Figure 24 CYBLE-416070-02 center of mass

11 Ordering information

Table 48 lists the CYBLE-416070-02 part number and features. **Table 49** lists the reel shipment quantities for the CYBLE-416070-02.

Table 48 Ordering information

MPN	Features												Package
	CPU speed (M4)	CPU speed (M0+)	Flash (KB)	SRAM (KB)	UDB	CAPSENSE™	Direct LCD Drive	12-bit SAR ADC	LP Comparators	SCB Blocks	I2S/PDM	GPIO	
CYBLE-416070-02	150/50	100/25	1024	288	12	✓	✓	1 Msps	2	5	✓	36	43-SMT

Table 49 Tape and reel package quantity and minimum order amount

Description	Minimum reel quantity	Maximum reel quantity	Comments
Reel Quantity	500	500	Ships in 500 unit reel quantities.
Minimum Order Quantity (MOQ)	500	–	
Order Increment (OI)	500	–	

The CYBLE-416070-02 is offered in tape and reel packaging. The CYBLE-416070-02 ships with a maximum of 500 Unit/reel.

11.1 Part numbering convention

The part numbers are of the form CYBLE-ABCDEF-GH where the fields are defined as follows.

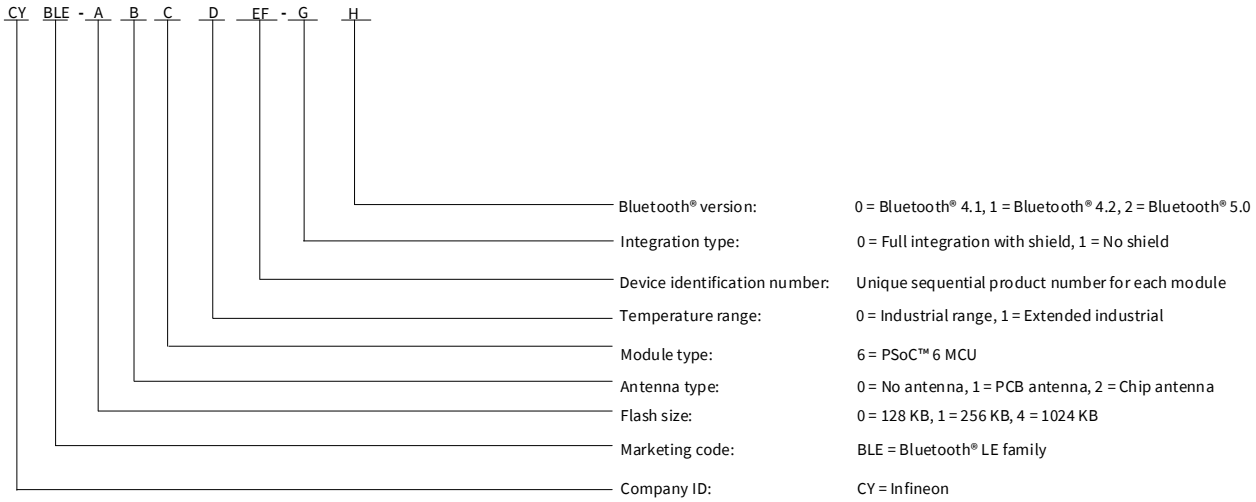

For additional information and a complete list of Infineon Bluetooth® LE products, contact your local Infineon sales representative. To locate the nearest Infineon office, visit our **website**.

12 Acronyms

Table 50 Acronyms used in this document

Acronym	Description
3DES	Triple Data Encryption Standard
abus	analog local bus
ADC	analog-to-digital converter
AES	Advanced Encryption Standard
AG	analog global
AHB	AMBA (advanced microcontroller bus architecture) high-performance bus, an Arm® data transfer bus
ALU	arithmetic logic unit
AMUXBUS	analog multiplexer bus
API	application programming interface
APSR	application program status register
Arm®	advanced RISC machine, a CPU architecture
ATM	automatic thump mode
BW	bandwidth
CAN	Controller Area Network, a communications protocol
CMRR	common-mode rejection ratio
CPU	central processing unit
CTBm	Continuous Time Block mini
CRC	cyclic redundancy check, an error-checking protocol
DAC	digital-to-analog converter, see also IDAC, VDAC
DFB	digital filter block
DIO	digital input/output, GPIO with only digital capabilities, no analog. See GPIO.
DMIPS	Dhrystone million instructions per second
DMA	direct memory access, see also TD
DNL	differential nonlinearity, see also INL
DNU	do not use
DR	port write data registers
DSI	digital system interconnect
DWT	data watchpoint and trace
ECC	error correcting code or Elliptic Curve Cryptography
ECO	external crystal oscillator
EEPROM	electrically erasable programmable read-only memory
EMI	electromagnetic interference
EMIF	external memory interface
EOC	end of conversion
EOF	end of frame
EPSR	execution program status register

Table 50 Acronyms used in this document *(continued)*

Acronym	Description
ESD	electrostatic discharge
ETM	embedded trace macrocell
FIR	finite impulse response, see also IIR
FPB	flash patch and breakpoint
FS	full-speed
GPIO	general-purpose input/output, applies to a PSoC™ pin
HVI	high-voltage interrupt, see also LVI, LVD
IC	integrated circuit
IDAC	current DAC, see also DAC, VDAC
IDE	integrated development environment
I^2C, or IIC	Inter-Integrated Circuit, a communications protocol
IIR	infinite impulse response, see also FIR
ILO	internal low-speed oscillator, see also IMO
IMO	internal main oscillator, see also ILO
INL	integral nonlinearity, see also DNL
I/O	input/output, see also GPIO, DIO, SIO, USBIO
IPOR	initial power-on reset
IPSR	interrupt program status register
IRQ	interrupt request
ITM	instrumentation trace macrocell
LCD	liquid crystal display
LIN	Local Interconnect Network, a communications protocol.
LR	link register
LUT	lookup table
LVD	low-voltage detect, see also LVI
LVI	low-voltage interrupt, see also HVI
LVTTL	low-voltage transistor-transistor logic
MAC	multiply-accumulate
MCU	microcontroller unit
MISO	master-in slave-out
NC	no connect
NMI	nonmaskable interrupt
NRZ	non-return-to-zero
NVIC	nested vectored interrupt controller
NVL	nonvolatile latch, see also WOL
opamp	operational amplifier
PAL	programmable array logic, see also PLD
PC	program counter
PCB	printed circuit board
PDM	Pulse-Density Modulation

Table 50 Acronyms used in this document *(continued)*

Acronym	Description
P/E	Program/Erase
PGA	programmable gain amplifier
PHUB	peripheral hub
PHY	physical layer
PICU	port interrupt control unit
PLA	programmable logic array
PLD	programmable logic device, see also PAL
PLL	phase-locked loop
PMDD	package material declaration data sheet
POR	power-on reset
PRES	precise power-on reset
PRS	pseudo random sequence
PS	port read data register
PSoC™	Programmable System-on-Chip
PSRR	power supply rejection ratio
PWM	pulse-width modulator
RAM	random-access memory
RMS	root-mean-square
RISC	reduced-instruction-set computing
RSA	Rivest–Shamir–Adleman
RTC	real-time clock
RTL	register transfer language
RTR	remote transmission request
RX	receive
SAR	successive approximation register
SC/CT	switched capacitor/continuous time
SCL	I^2C serial clock
SDA	I^2C serial data
S/H	sample and hold
SIG	Special Interest Group
SINAD	signal to noise and distortion ratio
SIO	special input/output, GPIO with advanced features. See GPIO.
SOC	start of conversion
SOF	start of frame
S/PDIF	Sony/Philips Digital Interface
SPI	Serial Peripheral Interface, a communications protocol
SR	slew rate
SRAM	static random access memory
SRES	software reset
SRSS	System Resources Subsystem

Table 50 Acronyms used in this document *(continued)*

Acronym	Description
SWD	serial wire debug, a test protocol
SWV	single-wire viewer
TD	transaction descriptor, see also DMA
THD	total harmonic distortion
TIA	transimpedance amplifier
TRM	technical reference manual
TRNG	True Random Number Generator
TTL	transistor-transistor logic
TX	transmit
UART	Universal Asynchronous Transmitter Receiver, a communications protocol
UDB	universal digital block
ULP	Ultra-low power
USB	Universal Serial Bus
USBIO	USB input/output, PSoC™ pins used to connect to a USB port
VDAC	voltage DAC, see also DAC, IDAC
WDT	watchdog timer
WOL	write once latch, see also NVL
WRES	watchdog timer reset
XRES	external reset I/O pin
XTAL	crystal

13 Document conventions

13.1 Unit of measure

Table 51 Unit of measure

Symbol	Unit of Measure
°C	degrees Celsius
dB	decibel
dBm	decibel-milliwatts
fF	femtofarads
Hz	hertz
KB	1024 bytes
kbps	kilobits per second
Khr	kilohour
kHz	kilohertz
kΩ	kilo ohm
ksps	kilosamples per second
LSB	least significant bit
Mbps	megabits per second
MHz	megahertz
MΩ	mega-ohm
Msps	megasamples per second
µA	microampere
µF	microfarad
µH	microhenry
µs	microsecond
µV	microvolt
µW	microwatt
mA	milliampere
ms	millisecond
mV	millivolt
nA	nanoampere
ns	nanosecond
nV	nanovolt
Ω	ohm
pF	picofarad
ppm	parts per million
ps	picosecond
s	second
sps	samples per second
sqrtHz	square root of hertz
V	volt

Revision history

Document version	Date of release	Description of changes
**	2022-01-13	Initial release

Trademarks
All referenced product or service names and trademarks are the property of their respective owners.

Edition 2022-01-13

Published by

Infineon Technologies AG

81726 Munich, Germany

© 2021 Infineon Technologies AG.
All Rights Reserved.

Do you have a question about this document?

Go to www.infineon.com/support

Document reference

002-34632 Rev. **

IMPORTANT NOTICE

The information given in this document shall in no event be regarded as a guarantee of conditions or characteristics ("Beschaffenheitsgarantie").

With respect to any examples, hints or any typical values stated herein and/or any information regarding the application of the product, Infineon Technologies hereby disclaims any and all warranties and liabilities of any kind, including without limitation warranties of non-infringement of intellectual property rights of any third party.

In addition, any information given in this document is subject to customer's compliance with its obligations stated in this document and any applicable legal requirements, norms and standards concerning customer's products and any use of the product of Infineon Technologies in customer's applications.

The data contained in this document is exclusively intended for technically trained staff. It is the responsibility of customer's technical departments to evaluate the suitability of the product for the intended application and the completeness of the product information given in this document with respect to such application.

For further information on the product, technology, delivery terms and conditions and prices please contact your nearest Infineon Technologies office (**www.infineon.com**).

WARNINGS

Due to technical requirements products may contain dangerous substances. For information on the types in question please contact your nearest Infineon Technologies office.

Except as otherwise explicitly approved by Infineon Technologies in a written document signed by authorized representatives of Infineon Technologies, Infineon Technologies' products may not be used in any applications where a failure of the product or any consequences of the use thereof can reasonably be expected to result in personal injury.