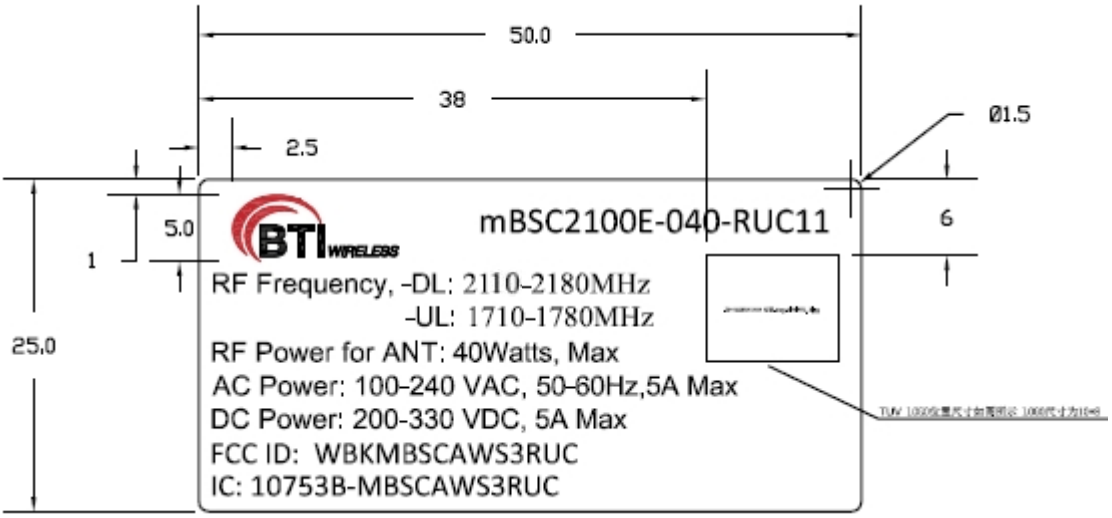
50.0
38
2.5
Ø1.5
5.0
1
6
25.0
mBSC2100E-040-RUC11
RF Frequency, -DL: 2110-2180MHz
-UL: 1710-1780MHz
RF Power for ANT: 40Watts, Max
AC Power: 100-240 VAC, 50-60Hz,5A Max
DC Power: 200-330 VDC, 5A Max
FCC ID: WBKMBSCAWS3RUC
IC: 10753B-MBSCAWS3RUC

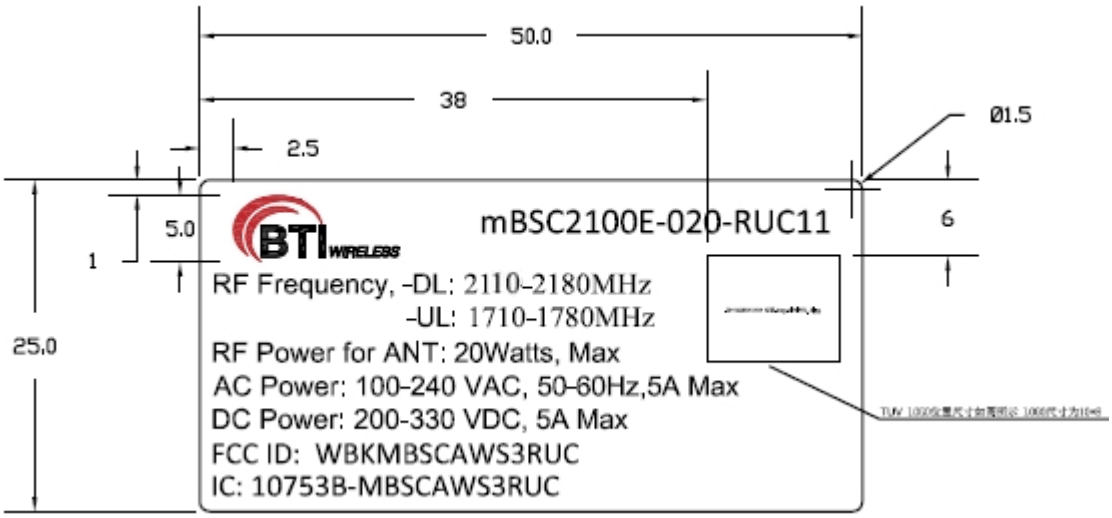
50.0
38
2.5
Ø1.5
5.0
1
6
25.0
mBSC2100E-020-RUC11
RF Frequency, -DL: 2110-2180MHz
-UL: 1710-1780MHz
RF Power for ANT: 20Watts, Max
AC Power: 100-240 VAC, 50-60Hz,5A Max
DC Power: 200-330 VDC, 5A Max
FCC ID: WBKMBSCAWS3RUC
IC: 10753B-MBSCAWS3RUC

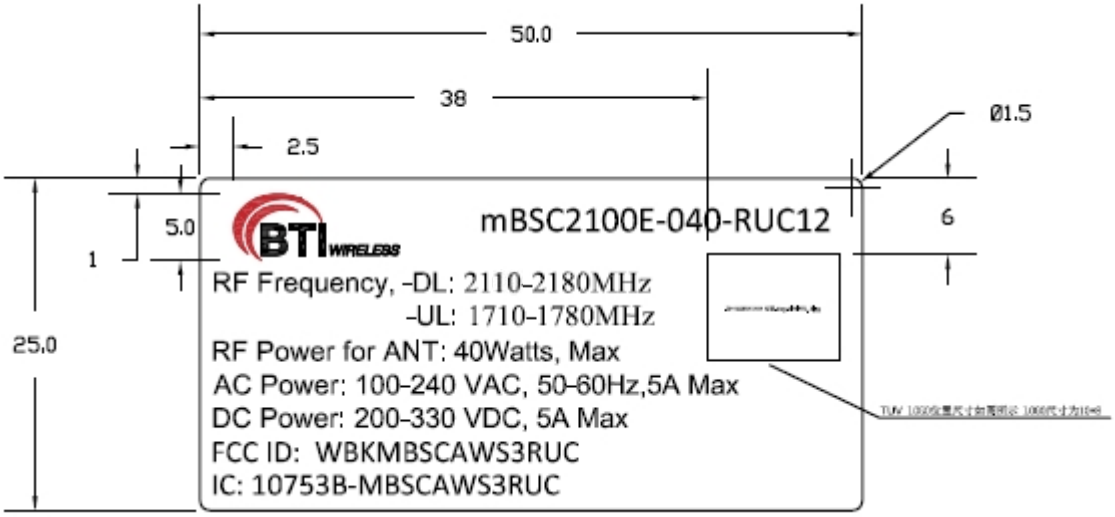
50.0
38
2.5
Ø1.5
5.0
1
6
25.0
mBSC2100E-040-RUC12
RF Frequency, -DL: 2110-2180MHz
-UL: 1710-1780MHz
RF Power for ANT: 40Watts, Max
AC Power: 100-240 VAC, 50-60Hz,5A Max
DC Power: 200-330 VDC, 5A Max
FCC ID: WBKMBSCAWS3RUC
IC: 10753B-MBSCAWS3RUC

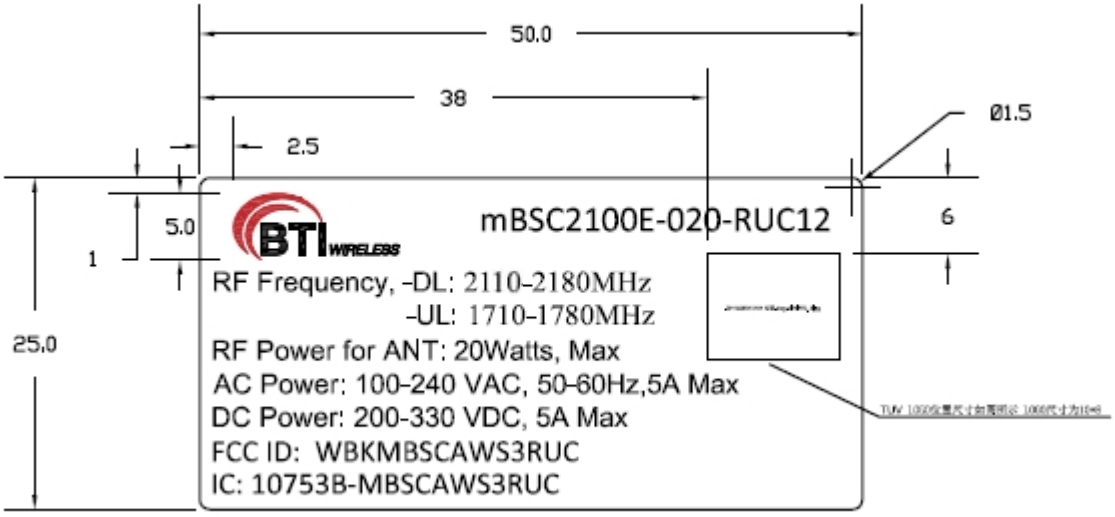
50.0
38
2.5
Ø1.5
5.0
1
6
25.0
mBSC2100E-020-RUC12
RF Frequency, -DL: 2110-2180MHz
-UL: 1710-1780MHz
RF Power for ANT: 20Watts, Max
AC Power: 100-240 VAC, 50-60Hz,5A Max
DC Power: 200-330 VDC, 5A Max
FCC ID: WBKMBSCAWS3RUC
IC: 10753B-MBSCAWS3RUC