products with a watertight reputation

AQ-MP-5UBT - WATERPROOF MEDIA PLAYER

for iPhone, iPod, USB, Bluetooth & MP3 devices

Design for Shipborne

USER / INSTALLATION MANUAL

WATERPROOF MEDIA PLAYER

Made for iPod iPhone

Bluetooth®

mp3

USB 2.0

Aquatic AV
282 Kinney Drive
San Jose, CA 95112, USA

E-mail: info@aquaticav.com
US & Canada: 1 877 579 2782
International: +1 408 559 1668
Fax: +1 408 559 0125

www.aquaticav.com

products with a watertight reputation

! PLEASE READ THIS INSTRUCTION MANUAL BEFORE INSTALLATION AND OPERATION !

1 Getting Started **3**
1.1 Contents 3
1.2 Connections 3
1.3 12-pin Harness Connection 3
1.4 Wiring Diagram 4
1.5 Mounting Precautions 5
1.6 Mounting the Media Player 6
1.7 Power On 8
2 Location of Controls **9**
2.1 Media Player Controls 9
3 Listening to Devices **10**
3.1 Listening via Bluetooth 10
3.1.1 Pair with Bluetooth Device 10
3.1.2 Listening via Bluetooth Device 10
3.2 Listening via USB 10
3.2.1 Listening via USB (Apple Devices) 10
3.2.2 Listening via USB Flash Drives 11
3.2.3 USB Search 11
3.2.4 Device Charging 11
3.3 Listening via Auxiliary Input (3.5mm Jack) 11
3.4 Adjusting Volume Level 11
4 Listening to FM/AM Radio **12**
4.1 Enter FM Radio Mode 12
4.2 Scan or Navigate FM Radio Channels 12
4.3 Saving Radio Channel to Memory 12
4.4 Listening to Saved Radio Memory 12
4.5 Switch between U.S. and European FM Modes 12
5 Settings Operation **13**
5.1 Audio Menu 13
5.2 Menu 13
5.3 AS/PS (Auto Scan/Preset Scan) 13
5.4 Local/Distant Tuning 13
5.5 Stereo/Mono 13
5.6 FM Tuning Area 13
5.7 Beep Tone 13
5.8 System Reset 13
6 Specifications & Dimensions **14**
4.1 Specifications 14
4.2 Dimensions 14
7 Warranty Information **15**

This device complies with Part 15 of the FCC Rules. Operation is subject to the following two conditions: (1) this device may not cause harmful interference, and (2) this device must accept any interference received, including interference that may cause undesired operation.

NOTE:
The equipment has been tested and found to comply with the limits for a Class B digital device, pursuant to Part 15 of the FCC Rules. These limits are designed to provide reasonable protection against harmful interference in a residential installation. This equipment generates, uses and can radiate radio frequency energy and, if not installed and used in accordance with the instructions, may cause harmful interference to radio communications. However, there is no guarantee that interference will not occur in a particular installation.

If this equipment does cause harmful interference to radio or television reception, which can be determined by turning the equipment off and on, the user is encouraged to try to correct the interference by one or more of the following measures:

- Reorient or relocate the receiving antenna.
- Increase the separation between the equipment and receiver.
- Connect the equipment into an outlet on a circuit different from that to which the receiver is connected.
- Consult the dealer or an experienced radio/TV technician for help.

This equipment complies with FCC radiation exposure limits set forth for an uncontrolled environment. This equipment should be installed and operated with minimum distance 20cm between the radiator & your body.

Warning: Any Changes or modifications not expressly approved by the party responsible for compliance could void the user's authority to operate the equipment.

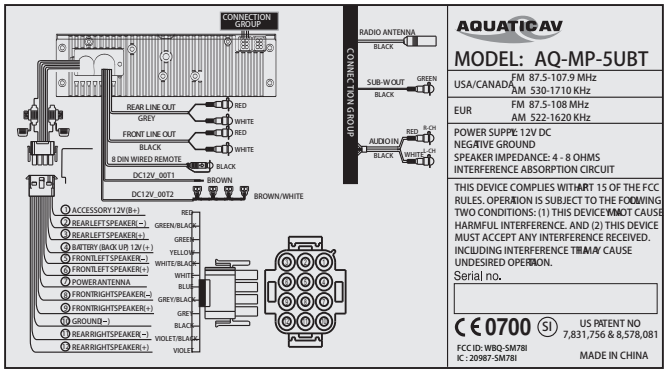

Patent: 7,831,756 & 8,578,081

iPhone and iPod are trademarks of Apple Inc., registered in the U.S. and other countries.

Made for iPod and Made for iPhone mean that an electronic accessory has been designed to connect specifically to iPod or iPhone respectively, and has been certified by the developer to meet Apple performance standards. Apple is not responsible for the operation of this device or its compliance with safety and regulatory standards. Please note that the use of this accessory with iPod or iPhone may affect wireless performance.

Product design and specification subject to change without notice. E&OE.

Doc V1.1

CE

R&TTE Instruction

Europe-EU Declarat on of Conformity
This device complies with the essential requirements of the R&TTE Directive 1999/5/EC.
The following test methods have been applied in order to prove presumption of conformity with the essential requirements of the R&TTE Directive 1999/5/EC:

ETSI EN 301 489-1 V1.9.2: 2011
ETSI EN 301 489-17 V2.2.1: 2012
ETSI EN 300 328 V1.9.1: 2015
EN 62479: 2010
EN 60065: 2002+A1: 2006+A11: 2008+ A2: 2010+ A12: 2011

IC Caution

-English:

This device complies with Industry Canada licence-exempt RSS standard(s).
Operation is subject to the following two conditions:
(1) This device may not cause interference, and
(2) This device must accept any interference, including interference that may cause undesired operation of the device.
This equipment should be installed and operated with a minimum distance of 20 cm between the radiator and your body.

-French:

Le present appareil est conforme aux CNR d'Industrie Canada applicables aux appareils radio exempts de licence. L'exploitation estautorisée aux deux conditions suivantes:
(1) l'appareil ne doit pas produire de brouillage, et
(2) l'utilisateur de l'appareildoit accepter tout brouillageradioélectrique subi, mêmesi le brouillage est susceptible d'en compromettre le fonctionnement.
Cet équipement doit être installé et utilisé à une distance minimale de 20 cm entre le radiateur et votre corps.

Declaration of Conformity

Hereby, AQUATIC AV， declares that this product， WATERPROOF MEDIA PLAYER ， is in compliance with essential requirements and other relevant provisions of Directive 1999/5/EC. A copy of the Declaration of conformity can be found at www.aquaticav.com

1.1 Contents

- AQ-MP-5UBT Digital Media Player
- Wiring Harness (AQ-UNH-2)
- Four (4) Stainless Steel Mounting Screws
- Spare Fuse
- Mounting Template
- Mounting Bracket
- DIN Cage
- User/Installation Manual

1.2 Connections (see Wiring Diagram 1.4)

1. 12-pin Watertight Harness
The 12-pin harness supplies power and ground connections to the Media Player and four (4) speaker channel output connections from the Media Player (see also 1.3 below).

⚠ **Do not cut or modify the 12-pin harness on the Locker side or warranty will be void.**

2. FM/AM Radio Antenna Jack
Allows connection of FM/AM radio antenna. For best FM/AM performance make sure the antenna is extended to the highest achievable position.

3. Auxiliary Outputs
Allows external amplifiers to be connected to power additional speakers.

4. Auxiliary Inputs
Allows an additional RCA input, from a standalone unit or another stereo source.

5. 8-pin DIN Cable
Allows connection of the wired Remote Control (AQ-WR-5F sold separately) or wireless Remote Control (AQ-RF-34 sold separately) RF receiver.

6. Subwoofer Output
Allows powered (active) subwoofer to be connected via RCA connector.

7. 12V DC External Trigger (x2)
Allows for external lighting or relays to be triggered (350mA max load).

8. USB Input
USB for connection of Apple devices USB flash drives. Charges USB devices when connected.

1.3 12-pin Harness Connection (see Wiring Diagram 1.4)

The AQ-MP-5UBT includes the universal harness AQ-UNH-2 in order to connect the stereo to power and speakers.

All open wire connections should be soldered and protected against water and dust for best long-term performance.

1.4 Wiring Diagram

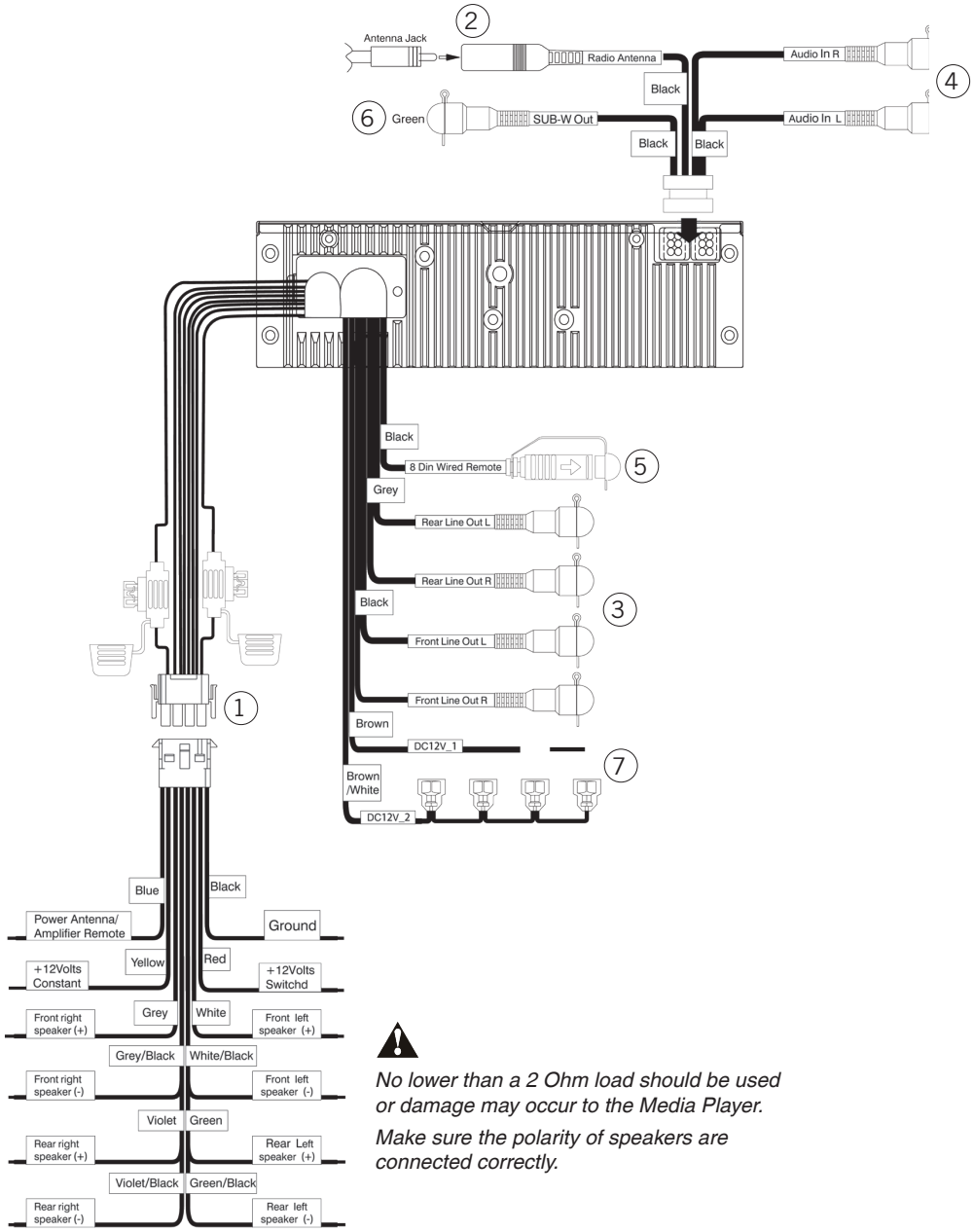

No lower than a 2 Ohm load should be used or damage may occur to the Media Player.

Make sure the polarity of speakers are connected correctly.

1.5. Mounting Precautions

1. A mounting template is included. Aquatic AV recommends using the ‘measure twice, cut once’ method!

2. Once the mounting hole is complete, make sure the outside surface is clean and clear of debris. The Media Player has an external water/dust proof gasket, but this requires a clean and flat surface for best performance.

3. The Media Player has four (4) front screws. Drive the screws using a screw driver. During final mounting apply equal pressure to all points for the best water/dust outer seal performance. Make sure screws are snug and do not over tighten.

4. Review all outside surfaces of the Media Player to ensure a proper water/dust seal. This is important for long-term environmental protection performance for your digital media device.

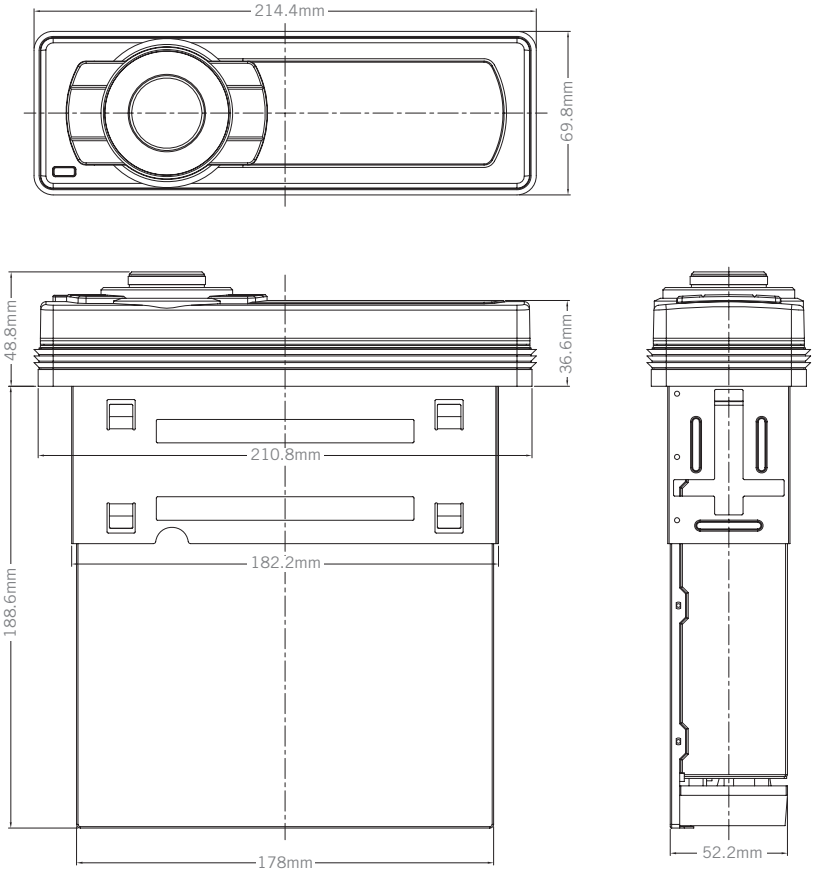

1.6 Mounting the Media Player

The AQ-MP-5UBT is designed for a multi-environment application. For an easy system setup, mount the Media Player so the front controls will be easily accessible. In addition, observe the following precautions:

1. Check clearances on both sides of a planned installation before drilling any holes or installing any screws.
2. When routing RCA cables, keep them away from power cables and output speaker wires.
3. Due to the design for a multi environment application, always support the back of the unit with the supplied back strap.

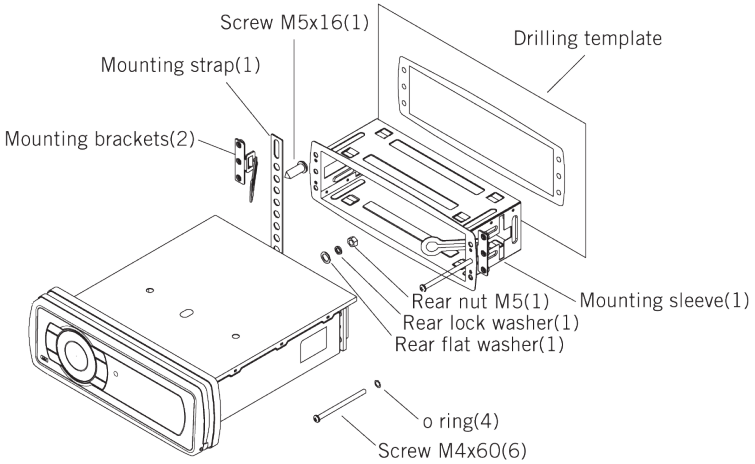

1.6.1 Slide mounting sleeve into DIN opening

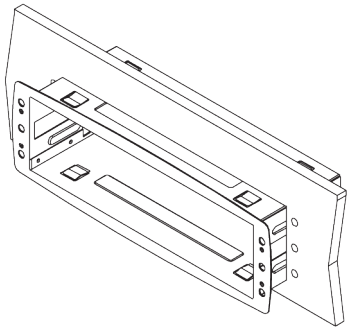

Aquatic AV offers a limited warranty of our products on the following terms:

Length of warranty
2 years on audio systems, electronics, speakers, and accessories (receipt required).

Coverage
This warranty covers only the original purchaser of an Aquatic AV product purchased from an authorized Aquatic AV dealer. In order to receive service, the purchaser must provide Aquatic AV with a copy of the receipt stating the customer name, dealer name, product purchased and date of purchase.

Defective products
Products found to be defective during the warranty period will be repaired or replaced (with a product deemed to be equivalent) at Aquatic AV's discretion.

What is not covered
Damage caused by accident, abuse, improper operations or theft. Any cost or expense related to the removal or reinstallation of product. Service performed by anyone other than an authorized Aquatic AV service center. Any product with the serial number or tamper labels defaced, altered, or removed. Subsequent damage to other components. Any product not purchased from an authorized Aquatic AV dealer.

Limit on implied warranties
Any implied warranties including warranties of fitness for use and merchantability are limited in duration to the period of the express warranty set forth above. Some states do not allow limitations on the length of an implied warranty, so this limitation may not apply. No person is authorized to assume for Aquatic AV any other liability in connection with the sale of the product.

How to obtain service
You must obtain a return material authorization number (RMA) to return any product to Aquatic AV. You are responsible for shipping charges of returned products to Aquatic AV.

Please record the model and serial number[s] of your equipment in the space provided below as your permanent record and will assist us with your factory warranty coverage. These numbers can be found on the rear of the Digital Media Player.

Model number[s]:	Serial number[s]:

6.1 Specifications

Media

Supported media.....Bluetooth/USB/MP3/FM/AM
Supported media max. dimensions.....107 x 184mm (WxH)
Device charging.....via USB

Inputs

Auxiliary..... 1x 3.5mm stereo Jack socket, 1x stereo pair RCA

Outputs

Pre-Out.....2x stereo pair RCA (4V)
Subwoofer.....1x RCA (4V)
12V Trigger.....2x 12V triggers (350mA)

Power

Output voltage @ 2 Ohm.....4x 72W
Output voltage @ 4 Ohm.....4x 45W
Operation voltage.....12V
Max current draw.....7A
Standby current draw.....6mA
Operating Temperature.....-15°C~+35°C

Multi-Environment Certifications

Waterproof / Dustproof.....Yes - IP55
Conformal PCB coating.....Yes
UV protection.....500 hours stable, ASTM D4329 compliant
Salt/Fog protection..... 500 hours stable, ASTM B117 compliant
Stainless Steel mountings.....Yes
USB Host ..... Host 1.1 compatibles 2.0

6.2 Dimensions

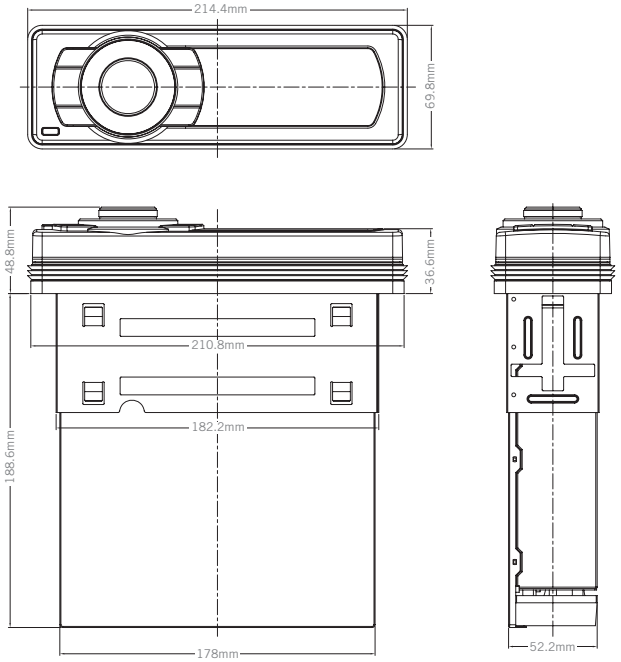

1.6.2 Slide mounting brackets into position and tighten center bolts. Remove mounting bracket handles by bending backing brackets handles until they break off.

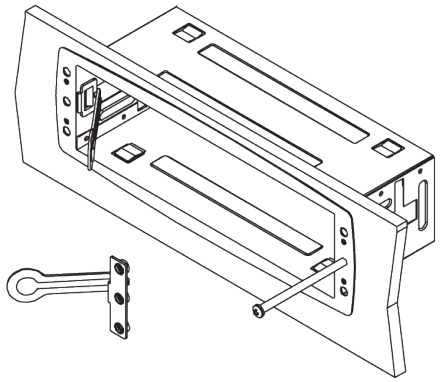

1.6.3 Slide Media Player into mounting sleeve. Secure Media Player using supplied hardware and mounting strap.

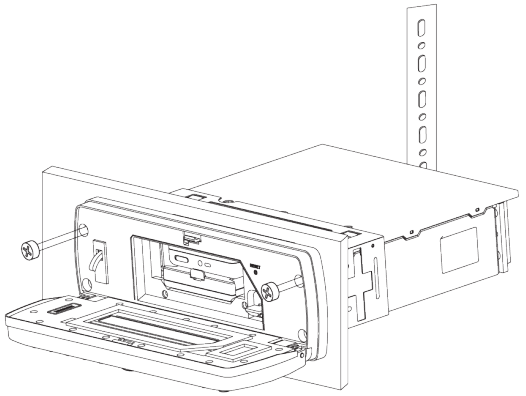

1.7 Power On

The AQ-MP-5UBT requires +12V DC to both the red and yellow wires. When both of these wires have power the AQ-MP-5UBT is always powered on. Ground is connected to the black wire.

Once all connections are made press the rotary knob and the stereo will turn ON.

In a spa application this requires the red and yellow wires to be jumped together and then connected to the +12VDC output of the power source. In this set up the AQ-MP-5UBT will always be on, with a very low current draw when idle.

In a boat, ATV or other application requiring power from a battery, the yellow wire (constant power) should be connected to the battery, and the red wire should be connected to the ignition or a switch.

For detailed instructions you can check out our online video:

'How to wire your Aquatic AV stereo system'

http://www.aquaticav.com/support/videos

5.1 Audio Menu

From the 'Audio Menu' you are able to change the bass, treble, balance, and fader.

1. To enter the 'Audio Menu' press the 'AUDIO/MENU' button.
2. In the 'Audio Menu' press the 'AUDIO/MENU' to scroll through all options.
3. To change the parameters use the rotary knob to adjust settings.

Any changes made in the 'Audio Menu' are system wide so it will affect all modes.

5.2. AS/PS (Auto Scan/Preset Scan)

Scans through the current frequency band, and assigns presets to the radio stations that have the strongest signal strength. Press and hold PRESET button to swicth between AS and PS modes.

1. When in AM/FM mode press FUNC to access the 'AS/PS' settings.
2. Use the rotary knob to adjust settings.

Only does this for one AM/FM band at a time.

5.3 Local/Distant Tuning

When 'Local' is turned on the Media Player seeks to only the radio channels with strong signal strength. When 'Local' is turned off the Media Player will seek to all radio channels it receives signal from.

1. When in AM/FM mode press FUNC to access the 'Local/Distant Tuning' settings.
2. Use the rotary knob to adjust settings.

When local is turned on the word 'Local' will appear in the upper right hand corner of the Media Player LCD.

5.4 Stereo/Mono

Change the output mode between stereo and mono. Some applications only accept a mono input.

1. When in AM/FM mode press FUNC to access the 'Stereo/Mono' settings.
2. Use the rotary knob to adjust settings.

5.5 FM Tuning Area

The FM tuning can be set to different areas, using the rotary knob to scroll through to select the desired tuning area.

There are seven different tuning areas: USA, EUR, LAT, ASIA, MIDDLE EAST, AUSTRALIA, RUSSIA.

1. When in AM/FM mode press FUNC to access the 'FM Tuning Area' settings.
2. Use the rotary knob to adjust settings.

5.6 Beep Tone

Beep tone plays when any button is pressed, it can be toggled on and off from this selection.

5.7 System Reset

Restores all factory settings.

4.1 Enter FM/AM Radio Mode

1. Press MODE on the unit keypad and select RADIO mode.

4.2 Scan or Navigate FM/AM Radio Channels

1. Press FAST REWIND/FAST FORWARD to seek another station.
2. Press and hold either FAST REWIND/FAST FORWARD for manual tuning back or forward.

4.3 Saving Radio Channel to Memory

1. Tune to the station you would like to be saved as a preset.
2. Press the FUNC button to enter the Function menu.
3. Select 'Manually Save Preset'.
4. Using the rotary knob you can choose which preset slot you would like to save the current station to.
5. Upon successfully saving a preset, the preset number that was chosen will be shown in the left corner.

Presets are only for the current band you are on. Each band FM1, FM2, FM3, AM1 and AM2 has six presets for a total of 30 (18x FM & 12x AM).

4.4 Listening to Saved Radio Memory

1. Once the presets have been set either manually or using AS/PS press the 'Preset' button to display your presets.

4.5 Switching between US and European FM Modes

1. When in 'RADIO' mode.
2. Press the FUNC button to enter the Function menu.
3. Scroll to 'AREA' then press the rotary knob.
4. Use the Rotary Knob to scroll to the desired tuning Area and select by pressing the Rotarey Knob.

Available Areas USA, OIRT, LATIN, ASIA, JAPAN,MID E, AUS, EURO.

US mode will increase and decrease the FM frequency in steps of 0.1 MHz, e.g. 88.5, 88.6,88.7 MHz. EUR mode will increase and decrease the FM frequency in steps of 0.05 MHz, e.g. 88.25, 88.30, 88.35 MHz.

2.1 Media Player Controls

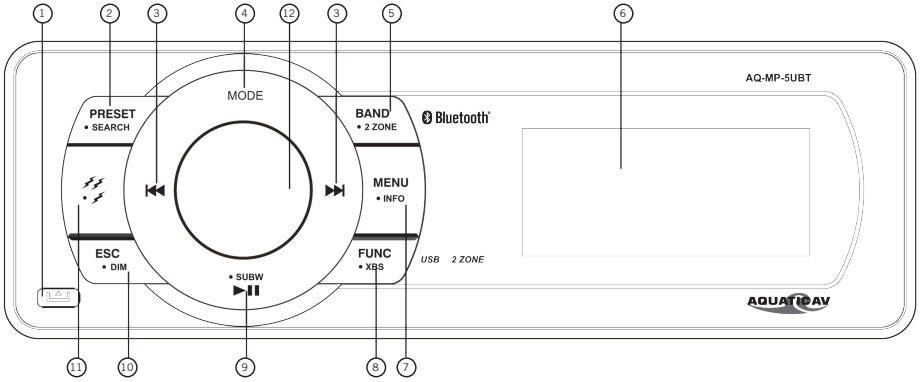

1. Front face release
2. Preset/Search
3. Fast Rewind/Forward
4. Mode button
5. Band/2-Zone
6. LCD screen
7. Menu/Info
8. Function/XBS
9. Play/Pause/Subwoofer
10. ESC/Dimmer
11. 12V Triggers
12. Rotary Select Knob

Button	AM/FM Mode	Aux In	Bluetooth	USB
Rotary Select Knob	Short Press: Mute			
	Long Press: Power Off			
	In menu: Select			
Mode	Short Press: Enter mode select screen			
	Long Press: No Function			
Rotary Knob Clockwise	When turned clockwise the volume increases			
Rotary Knob Counter Clockwise	When turned counter clockwise the volume decreases			
Fast Forward	Short Press: Scans to the next station	No Function	Changes to next song	Changes to next song
	Long Press: Switches into manual seek mode	No Function	No Function	No Function
Fast Rewind	Short Press: Scans to the previous station	No Function	Changes to Previous Song	Changes to Previous Song
	Long Press: Switches into manual seek mode	No Function	No Function	No Function
Play/Pause/Subwoofer	Short Press: Toggles between Play and Pause	No Function	Short Press: Toggles between Play and Pause	
	Long Press: Displays subwoofer volume			
Band/2 Zone	Short Press: Switches between AM/FM Bands	No Function	No Function	No Function
	Long Press: Toggles 2 Zone selection menu			
12V Trigger	Short Press: Toggles 12V Trigger menu			
Func/XBS	Short Press: Toggles applicable functions for each mode			
	Long Press: Toggles XBS ON/OFF			
ESC/DIM	Short Press: Returns you to the previous screen			
	Long Press: Toggles between dimmer modes			
ESC/Info	Short Press: Returns you to the Default Screen			
	Long Press: Displays info if any available	No Function	No Function	
Preset/Search	Short Press: Displays your presets	No Function	Toggles Search feature*	Toggles Search feature*
	Long Press: Autosets presets	No Function	No Function	No Function
Menu/Info	Short Press: Toggles system menu			
	Long Press: Changes the information displayed on screen		Changes the information displayed on screen*	Changes the information displayed on screen*

* iPod & iPhone only

If your music player is connected via the Auxiliary input you will not be able to control track or receive track information.

Turn off DSP to access control of Bass and Treble

3.1 Listening via Bluetooth

The Bluetooth menu is accessible via the in the 'Menu/Info' button and is used to connect or disconnect a Bluetooth device that has already been paired.

IAP (Information Apple Protocol) Bluetooth connectivity allows device information, such as song, playlist and album titles, to be streamed wirelessly and viewable on the AQ-MP-5UBT-H screen. This feature is available for Apple devices only.

3.1.1 Pair with Bluetooth Device

1. Enable Bluetooth mode by pressing MODE and selecting Bluetooth.
2. Switch on your Bluetooth device.
3. Select 'AQUATIC AV' from the list of available devices to pair (no password is needed).
4. A Bluetooth logo will illuminate on the Media Player LCD to verify Bluetooth is activated.

Only one Bluetooth device can be paired with the Media Player at any time.

3.1.2 Listening via Bluetooth Device

1. Bluetooth mode will be activated once a Bluetooth device is linked.
2. Play the song from device and the sound will play through the Media Player.
3. Press PLAY/PAUSE to play/pause the song.
4. Press FAST REWIND/FORWARD buttons to play previous/next song file.
5. Previous/next track and volume up/down can be controlled directly from your Bluetooth device or directly from the Media Player controls.

3.2 Listening via USB

3.2.1 Listening via USB (Apple Devices)

1. Remove the faceplate and press the lever in the lower right corner of the unit to release the mechanism.
2. Set the iPod/iPhone in the mechanism and adjust the clamps to hold it secure.
3. Plug the iPod/iPhone cable into the USB input, and tuck the cable in so the faceplate can be reattached.
4. Replace the faceplate. If the stereo was previously on it will come back on. If not press the Rotary Knob to power the unit on.
5. Press the Mode button and select USB Mode.

3.2.2 Listening via USB Flash Drives

1. Remove the faceplate and press the lever in the lower right corner of the unit to release the mechanism.
2. Plug the USB drive in the USB port.
3. Replace the faceplate. If the stereo was previously on it will come back on. If not press the Rotary knob to power it on.
4. Press the Mode button and select USB Mode.

3.2.3 USB Search

1. When using an iPhone, iPod or USB flash drive press SEARCH to enter USB searching mode.
2. Once in searching mode the menu will display 'Playlist'. Use the Rotary Knob to scroll through the search modes below:

   1) Playlist 2) Artist 3) Album 4) Song 5) Genre 6) Composer 7) Audio Book

3. Press the Rotary Knob to select the desired search mode and continue in this manner to navigate the menu sub-folders.
4. Use and FAST REWIND/FAST FORWARD to navigate through your menu page by page.

3.2.4 Device Charging

When specified USB devices are connected to the USB input the device battery will charge.

3.3 Listening via Auxiliary Input (3.5mm Jack)

1. Remove the faceplate from the stereo.
2. Connect your MP3 device to the 3.5mm connector.
3. Re-attach the faceplate.
4. Press the rotary knob to power the Media Player ON (if the faceplate was removed with the stereo still powered on, it will power on by itself).
5. Press (MODE) on the Media Player or remote control to select 'AUX IN-1' mode.

Always ensure to connect and disconnect your Media Player with dry hands!

3.4 Adjust Volume Level

1. Turn the rotary knob clockwise increase the volume.
2. Turn the rotary knob counter clockwise to reduce the volume.