AQUATIC AV®

products with a watertight reputation

CP6 - WATERPROOF STEREO

USER / INSTALLATION MANUAL

FCC ID: WBQCP6

Bluetooth® | DAB+ Digital Audio Broadcasting | USB | AM/FM RADIO

288W POWER | 12V TRIGGERS | DSP EQ | IP65

Aquatic AV
282 Kinney Drive
San Jose, CA 95112, USA

E-mail: info@aquaticav.com
US & Canada: 1 877 579 2782
International: +1 408 559 1668
Fax: +1 408 559 0125

www.aquaticav.com

AQUATIC AV®

products with a watertight reputation

! PLEASE READ THIS INSTRUCTION MANUAL BEFORE INSTALLATION AND OPERATION !

Table of Contents

1 Getting Started....3
1.1 Contents....3
1.2 Connections....3
1.3 Connections Diagram....4
1.4 Power On....5
1.5 Installation....6
1.5.1 Mounting Hole Method 1....6
1.5.2 Mounting Hole Method 2....6
1.5.3 Installation Method 1....7
1.5.4 Installation Method 2....8
2 Controlling the Stereo....9
2.1 Location of Controls....9
2.2 Control Functions....10
2.3 Wired Remote Control WR6 (sold separately)....11
3 Listening via Bluetooth....12
3.1 Listening via Bluetooth....12
3.2 Pair with Bluetooth Audio Device....12
3.3 Listening via Bluetooth Audio Device....12
3.4 Bluetooth Multi-Link....12
4 Listening via USB....13
4.1 Listening via USB....13
4.2 Direct Search by Folder/File....13
4.3 Direct Search by Track Number....13
4.4 Random Playback....13
4.5 Repeat Playback....13
4.6 Device Charging....13
5 Listening to DAB+ Digital Radio....14
5.1 What is DAB+ Digital Radio?....14
5.2 Listening to DAB+ Digital Radio....14
5.3 Manually Save DAB+ Stations to Memory....14
5.4 Automatically Save DAB+ Stations to Memory....14
5.5 Listening to Saved Radio Memory....14
6 Listening to AM/FM Radio....15
6.1 Listening to AM/FM Radio....15
6.2 Manually Save AM/FM Radio Stations to Memory....15
6.3 Automatically Save AM/FM Radio Stations to Memory....15
6.4 Listening to Saved Radio Memory....15
7 Audio & Settings Menus....16
7.1 Audio Menu....16
7.1.1 Beep Tone....16
7.1.2 EQ....16
7.1.3 Loudness....16
7.2 Setting Menu....16
7.2.1 Dimmer High/Low....16
7.2.2 Priority Display (Info/Clock)....17
7.2.3 Power On Volume....17
7.2.4 Area US/Euro....17
7.2.5 Local On/Off....17
7.2.6 Stereo/Mono....17
7.2.7 Clock Settings....17
7.2.8 Bluetooth Off/Link....17
7.2.9 Restore....17
8 Additional Features....18
8.1 Listening to Auxilliary Devices....18
8.2 External 12V Triggers....18
9 Specifications & Dimensions....19
9.1 Specifications....19
9.2 Dimensions....19
10 Warranty Information....20

This page is intentionally blank

This page is intentionally blank

Getting Started

1.1 Contents

- CP6 Waterproof Stereo
- Silicon Faceplate
- User/Installation Manual
- Wiring Harness (AQ-UNH-2)*
- Four (4) Stainless Steel Mounting Screws*
- Mounting Template*

1.2 Connections (see Wiring Diagram 1.3)

1. 12-pin Watertight Harness*
The 12-pin harness supplies power and ground connections to the stereo and four (4) speaker channel output connections from the stereo.

Do not cut or modify the 12-pin harness on the stereo side or warranty will be void.

2. AM/FM Radio Antenna Jack
Allows connection of AM/FM radio antenna. For best AM/FM performance make sure the antenna is extended to the highest achievable position.

3. Auxiliary Outputs
Allows external amplifiers to be connected to power additional speakers.

4. Auxiliary Inputs
Allows an additional RCA input, from a standalone unit or another stereo source.

5. Wired Remote Connector
Allows connection of the wired Remote Control (WR6 sold separately).

6. 12V DC External Trigger (x2)
Allows for external lighting or relays to be triggered (3A max load).

7. USB Input
Play USB thumb drives with supported audio media and charge devices when connected.

8. DAB Input Cable
Allows connection of the DAB+ Digital Radio Receiver (sold separately).

9. Bluetooth Antenna
Allows a Bluetooth device to wirelessly connect to the unit.

Aquatic AV does not recommend the Wired Remote Control WR6 for use in spa applications.

*Retail packaged models only.

1.3 Connections Diagram

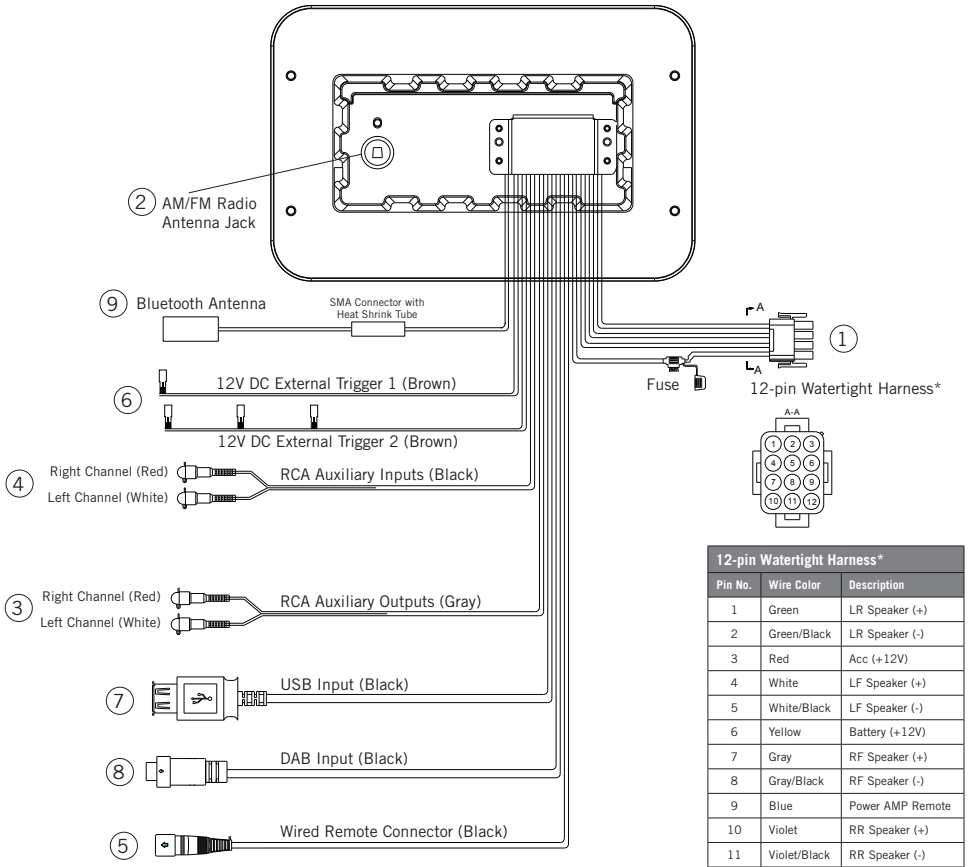

12-pin Watertight Harness*		
Pin No.	Wire Color	Description
1	Green	LR Speaker (+)
2	Green/Black	LR Speaker (-)
3	Red	Acc (+12V)
4	White	LF Speaker (+)
5	White/Black	LF Speaker (-)
6	Yellow	Battery (+12V)
7	Gray	RF Speaker (+)
8	Gray/Black	RF Speaker (-)
9	Blue	Power AMP Remote
10	Violet	RR Speaker (+)
11	Violet/Black	RR Speaker (-)
12	Black	Ground

No lower than a 2 Ohm speaker load should be used or damage may occur to the stereo. Make sure the polarity of speakers is connected correctly.

All open wire connections should be soldered and protected against water and dust for best long-term performance.

Aquatic AV does not recommend the Wired Remote Control WR6 for use in spa applications.

*Retail packaged models only.

FCC ID:
MADE IN CHINA

FCC Statement to the User

This equipment has been tested and found to comply with the limits for a Class B digital device, pursuant to Part 15 of the FCC Rules. These limits are designed to provide reasonable protection against harmful interference in a residential installation. This equipment generates, uses and can radiate radio frequency energy and, if not installed and used in accordance with the instructions, may cause harmful interference to radio communications. However, there is no guarantee that interference will not occur in a particular installation. If this equipment does cause harmful interference to radio or television reception, which can be determined by turning the equipment off and on, the user is encouraged to try to correct the interference by one of the following measures:

1. Reorient or relocate the receiving antenna.

2. Connect the equipment into an outlet on a circuit different from that to which the receiver is connected.

3. Increase the separation between the equipment and receiver.

4. Consult the dealer or an experienced radio/TV technician for help.

FCC Caution:

Any changes or modifications not expressly approved by the party responsible for compliance could void the user's authority to operate this equipment.

This device complies with Part 15 of the FCC Rules. Operation is subject to the following two conditions: (1) This device may not cause harmful interference, and (2) this device must accept any interference received, including interference that may cause undesired operation

Product design and specification subject to change without notice. E&OE.

Doc V1.4

Aquatic AV offers a limited warranty of our products on the following terms:

Length of warranty
2 years on audio systems, electronics, speakers, and accessories (receipt required).

Coverage
This warranty covers only the original purchaser of an Aquatic AV product purchased from an authorized Aquatic AV dealer. In order to receive service, the purchaser must provide Aquatic AV with a copy of the receipt stating the customer name, dealer name, product purchased and date of purchase.

Defective products
Products found to be defective during the warranty period will be repaired or replaced (with a product deemed to be equivalent) at Aquatic AV's discretion.

What is not covered
Damage caused by accident, abuse, improper operations or theft. Any cost or expense related to the removal or reinstallation of product. Service performed by anyone other than an authorized Aquatic AV service center. Any product with the serial number or tamper labels defaced, altered, or removed. Subsequent damage to other components. Any product not purchased from an authorized Aquatic AV dealer.

Limit on implied warranties
Any implied warranties including warranties of fitness for use and merchantability are limited in duration to the period of the express warranty set forth above. Some states do not allow limitations on the length of an implied warranty, so this limitation may not apply. No person is authorized to assume for Aquatic AV any other liability in connection with the sale of the product.

How to obtain service
You must obtain a return material authorization number (RMA) to return any product to Aquatic AV. You are responsible for shipping charges of returned products to Aquatic AV.

Please record the model and serial number[s] of your equipment in the space provided below as your permanent record and will assist us with your factory warranty coverage. These numbers can be found on the rear of the stereo.

Model number[s]:	Serial number[s]:

1.4 Power On

In a spa application the red and yellow wires should be jumped together and then connected to the +12VDC output of the power source. In this set up the CP6 will always be on, with a very low current draw when idle.

In a boat, ATV or other application requiring power from a battery, the yellow wire (constant power) should be connected to the battery, and the red wire should be connected to the ignition or a switch.

For detailed instructions you can check out our online video:

'How to wire your Aquatic AV stereo system'
http://www.aquaticav.com/support/videos

Once all connections are made press the rotary knob and the stereo will turn ON. Press and hold rotary knob for 2 seconds to turn the unit OFF.

1.5 Installation

PLEASE READ THIS INSTRUCTION MANUAL BEFORE INSTALLATION AND OPERATION.

Aquatic AV recommends installtion of this stereo by a professional technician.

A mounting template is included (retail packaged models only). Aquatic AV recommends using the 'measure twice, cut once' method!

1. Check clearances on both sides of a planned installation area before drilling any holes.
2. Cut the mounting hole using one of the two methods detailed below.
3. Once complete make sure the outside surface is clean and clear of debris. The CP6 stereo has an external water/dust proof gasket which requires a clean and flat surface for best performance.

1.5.1 Mounting Hole Method 1

1. Using a jigsaw cut a rectangluar hole with dimensions 111mm (W) x 51mm (H).

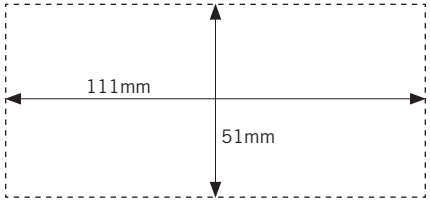

*Not to scale! Please use the mounting template provided**

1.5.2 Mounting Hole Method 2

1. Use a spirit level to mark two points 2" (50.8mm) horizontally apart.
2. Drill two pilot holes at the marked points and then using a circular saw drill two holes with a 3" (76.2mm) diameter.
3. The CP6 should fit through the widest points of the hole and then be secured using either of the two installaion methods listed below.

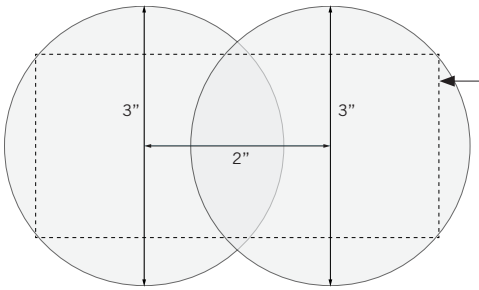

Chassis dimensions 110mmx 50mm

*Not to scale! Please use the mounting template provided**

*Retail packaged models only.

9.1 Specifications

Media

Supported Media.....Bluetooth Audio / USB / DAB+ / MP3 / AM / FM / AUX
Device Charging.....via rear USB cable (2.1A)

Inputs

Auxiliary..... 1x stereo pair RCA

Outputs

Pre-Out.....1x stereo pair RCA (2V)
12V Trigger.....2x 12V triggers (3A)

Power

Output Voltage @ 2 Ohm.....4x 72W
Output Voltage @ 4 Ohm.....4x 45W
Operation Voltage..... 10.5V - 14.4V DC
Max Current Draw.....10A
Standby Current Draw.....<3mA

Radio

DAB+ Digital Radio.....18 pre-set memory
Requires AQ-DAB+ Radio Receiver (sold separately)

AM/FM Radio.....18x FM pre-set & 12x AM pre-set memory. US/Euro frequencies
US: FM 88.7 to 108.0 (100kHz spacing). AM 530 to 1710 (10kHz spacing)
EURO: FM 87.5 to 108.0 (50kHz spacing). AM 522 to 1620 (9kHz spacing)

Multi-Environment Certifications

Waterproof / Dustproof..... IP65
Conformal PCB Coating.....Yes
UV Protection.....500 hours stable, ASTM D4329 compliant
Salt/Fog Protection.....500 hours stable, ASTM B117 compliant
Stainless Steel Mountings.....Yes

9.2 Dimensions

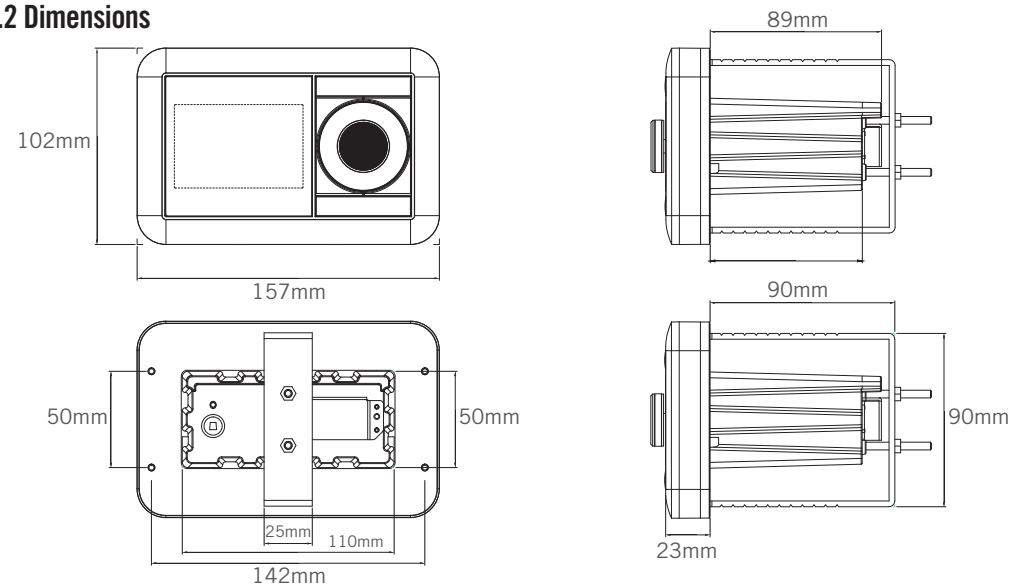

8.1 Listening to Auxiliary Devices

1. Connect your audio device to the rear RCA connectors using a stereo RCA cable.
2. Press MODE on the stereo or remote control to select 'AUX' mode.
3. Play the song from your auxiliary audio device and the sound will play through the stereo.

Always ensure you connect and disconnect the stereo with dry hands!

8.2 External 12V Triggers

The CP6 stereo has two independent 12V 'accessory' triggers. These could activate any 12V based device, such as 12V lights or 12V motors.

In any operational mode, press the 12V TRIGGER button to activate. Press again to deactivate. If using two external trigger wires you can also activate the second external trigger by pressing and holding the 12V TRIGGER button to activate. Press and hold again to deactivate.

Aquatic AV strongly recommend you speak to our technical service staff or your local Aquatic AV dealer if you are considering using this feature.

Load on External Trigger should not exceed 3A.

1.5.3 Installation Method 1

1. Slide the CP6 stereo through the mounting hole and secure the stereo using the mounting bracket. If the bracket needs to be shortened this can be done by removing the appropriate number of breakaway segments using a pair of pliars.

2. Review all outside surfaces of the CP6 stereo to ensure a proper water/dust seal. This is important for long-term environmental protection performance.

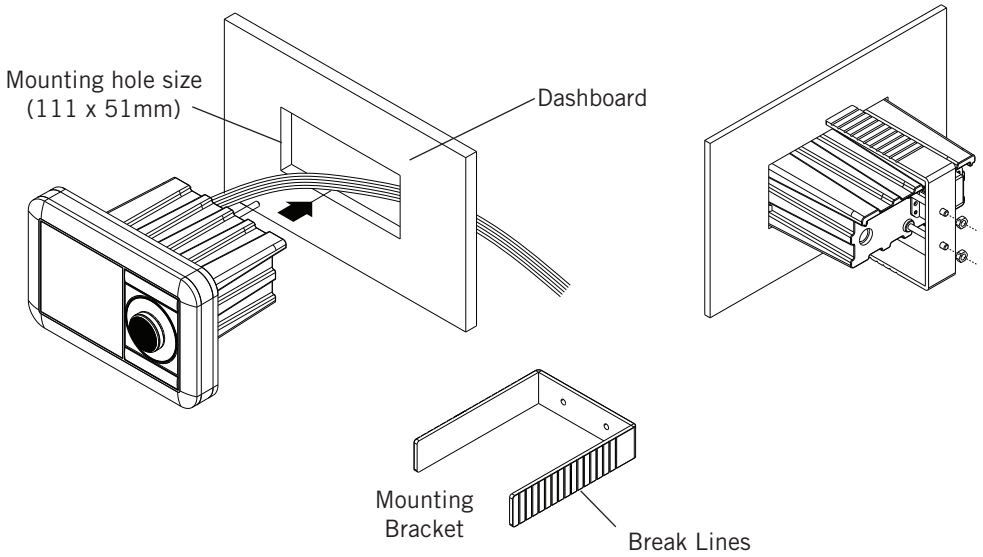

Make sure to connect other wires before power connection.

1.5.4 Installation Method 2

1. Remove the front trim ring from the CP6 stereo to reveal the four (4) front locking screws.

2. Slide the CP6 stereo through the mounting hole and secure the stereo using the front locking screws.

3. Drive the screws using a screw driver. During final mounting, apply equal pressure to all points for the best water/dust outer seal performance. Make sure screws are snug and do not over tighten.

4. Review all outside surfaces of the CP6 stereo to ensure a proper water/dust seal. This is important for long-term environmental protection performance.

5. After installation in complete snap the trim ring back firmly in to place to cover the screw holes.

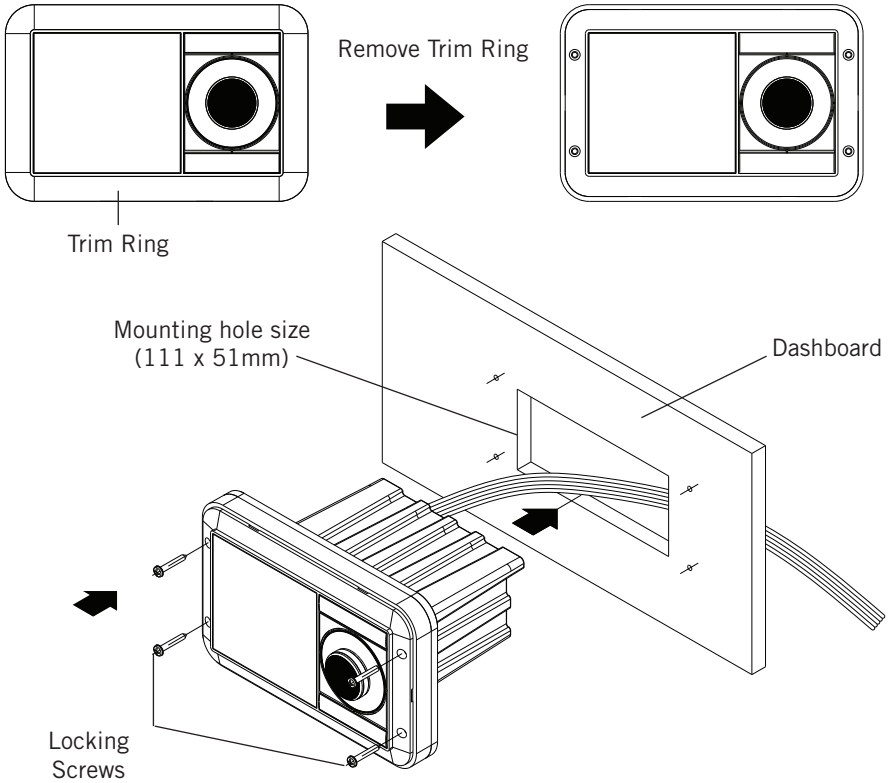

Make sure to connect other wires before power connection.

7.2.2 Priority Display (Info/Clock)

When set it to PRI INFO the display will by default show information relating to the music being played. Press and hold the MODE button to display the clock for 5 seconds.

When set it to PRI CLK the display will by default show the clock. Pressing any key it will display information relating to the music being played for 5 seconds.

7.2.3 Power On Volume

Sets the maximum volume the stereo will be set when powering the unit on. If the stereo is switched off with a lower volume than the P-Vol setting then the lower volume setting will be used.

Normal volume control and operation is resumed once the Rotary Selector is turned after switching the stereo on.

7.2.4 Area US/Euro

Select US or European AM/FM radio frequencies.

US mode will increase and decrease the FM frequency in steps of 0.1 MHz, e.g. 88.5, 88.6,88.7 MHz. EUR mode will increase and decrease the FM frequency in steps of 0.05 MHz, e.g. 88.25, 88.30, 88.35 MHz.

7.2.5 Local On/Off

When Local is turned on the stereo seeks to only the radio channels with strong signal strength. When Local is turned off the stereo will seek to all radio channels it receives signal from.

When Local setting is turned on the word 'Local' will appear in the upper right hand corner of the stereo's display.

7.2.6 Stereo/Mono

Change the output mode between stereo and mono. Some applications only accept a mono input.

7.2.7 Clock Settings

Adjust the time and switch the clock on or off.

7.2.8 Bluetooth Off/Link

Switches Bluetooth connectivity on or off. All paired devices will be disconnected in Bluetooth Off mode.

7.2.9 Restore

Restores all factory settings.

7.1 Audio Menu

1. Press the AUDIO/MENU button to enter the Audio menu. The available Audio options are:
   BASS - TREBLE - BALANCE - FADER - BEEP - EQ - LOUD
2. Turn the Rotating Selector to navigate the menu options.
3. Press the Rotary Selector to open the desired Audio option or confirm changes to the Audio settings.

Any changes made in the Audio menu are system wide and will affect all modes.

7.1.1 Beep Tone

The beep tone plays when any button is pressed and can be switched on and off from this selection.

7.1.2 EQ

The CP6 stereo is equipped with an audio DSP (Digital Signal Processor) to provide preset listening experiences for different music types. If you have chosen a preset equalizer setting (Flat, Rock, Classic, or Pop) the previous Bass & Treble settings will be overridden.

7.1.3 Loudness

Increases the sound output level by 15dB.

7.2 Settings Menu

1. Press and hold the AUDIO/MENU button to enter the Settings menu. The available Settings options are:
   DIM H/L - PRI INFO/CLK - P-VOL - AREA USA/EUR - LOC ON/OFF - STEREO/MONO - CLOCKSET - BT OFF/LINK - RESTORE
2. Turn the Rotating Selector to navigate the menu options.
3. Press the Rotary Selector to open the desired Audio option or confirm changes to the Audio settings.

Any changes made in the Audio menu are system wide and will affect all modes.

7.2.1 Dimmer High/Low

Adjust the display brightness from 100% for normal operation to 30% brightness to reduce screen glare during night time operation.

2.1 Location of Controls

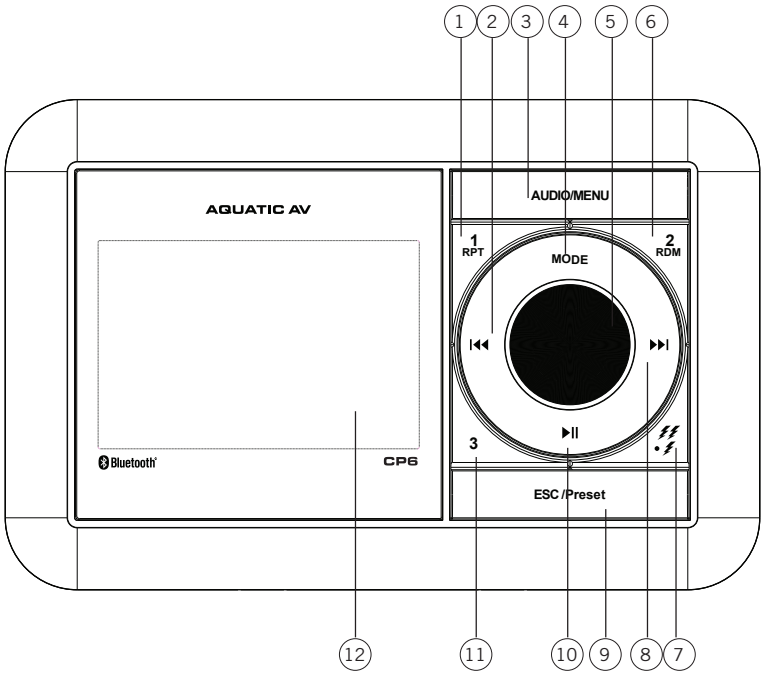

1. Preset 1 / Repeat Playback
2. Fast Rewind
3. Audio/Menu
4. Mode button
5. Rotary Selector
6. Preset 2 / Random Playback
7. 12V Triggers
8. Fast Forward
9. ESC/Preset
10. Play/Pause
11. Preset 3
12. LCD Display

2.2 Control Functions

Button	Action	AM/FM	USB	BT	DAB	AUX
Audio/Menu	Short Press	Audio Menu: Bass - Treble - Balance - Fader - Beep - EQ - Loud				
	Long Press	Settings Menu: Dim H/L - PRI Info/Clk - P-Vol - Area US/Euro - Loc On/Off - Stereo/Mono - Clock Set - BT Off/Link - Restore				
ESC/Preset	Short Press	1) In MENU: EXIT 2) In FM: CH1-> CH2-> CH3-> CH4-> CH5-> CH6-> CH1...	1) In MENU: EXIT 2) In USB: Direct Search / Number Search	1) In MENU: EXIT 2) In BT: No Function	1) In MENU: EXIT 2) In DAB: CH1-> CH2-> CH3-> CH4-> CH5-> CH6-> CH1...	1) In MENU: EXIT 2) In AUX: No Function
	Long Press	Auto Store	No Function	No Function	DAB Scan	No Function
Fast Rewind	Short Press	Seek Down	Previous Track	Previous Track	Previous Station	No Function
	Long Press	Manual Tune	Fast Rewind	No Function	No Function	No Function
Fast Forward	Short Press	Seek Up	Next Track	Next Track	Next Station	No Function
	Long Press	Manual Tune	Fast Forward	No Function	No Function	No Function
Play/Pause	Short Press	Mute	Play/Pause	Play/Pause	Mute	Mute
	Long Press	Manual Tune	No Function	No Function	Manual Store	No Function
Mode/Disp	Short Press	Changes Source				
	Long Press	Display Clock/Info				
1/RPT	Short Press	Preset Ch.1 Read	Repeat One / Repeat All	No Function	Preset Ch.1 Read	Display Software Version
	Long Press	Preset Ch.1 Save	DIR / Folder Down	No Function	Preset Ch.1 Save	No Function
2/RDM	Short Press	Preset Ch.2 Read	Random	No Function	Preset Ch.2 Read	No Function
	Long Press	Preset Ch.2 Save	DIR / Folder Up	No Function	Preset Ch.2 Save	No Function
3	Short Press	Preset Ch.3 Read	No Function	No Function	Preset Ch.3 Read	No Function
	Long Press	Preset Ch.3 Save	No Function	No Function	Preset Ch.3 Save	No Function
Rotary Selector	Rotate	Volume Up/Down and Navigate Menus				
Power/Band (Push Rotary Selector)	Short Press	Power On / Band Change / Enter	Enter when in Menu	Power On	Band Change / Enter	Power On
	Long Press	Power Off				
12V Triggers	Short Press	12V DC Trigger 1 Output On/Off				
	Long Press	12V DC Trigger 2 Output On/Off				

If your music player is connected via the Auxiliary input you will not be able to control track or receive track information.

Navigating past the last Settings Menu item (Restore) will automatically exit the Settings Menu and enter the Audio Menu. Press and hold Audio/Menu button to enter the Settings Menu again.

6.1 Listening to AM/FM Radio

1. Enter radio mode by pressing MODE and selecting RADIO.
2. Navigate the available stations using the Fast Forward/Fast Rewind buttons.
3. Select the desired station by pressing the Rotary Selector button.
4. Press FAST REWIND/FAST FORWARD to seek another station.
5. Press and hold FAST REWIND/FAST FORWARD for manual tuning. (Manual tuning will time out after 5 seconds of no action then we revert back to Seek/Auto).
6. Press the Rotary Selector to change the AM/FM radio band.

6.2 Manually Save AM/FM Radio Stations to Memory

1. Tune to the station you would like to be saved as a preset.
2. Press and hold the Play/Pause button and the stereo will display 'SAVE CH1'.
3. Turn the Rotary Selector to select the desired preset slot you would like to save the current station to.
4. Press the Rotary Selector to save the preset.
5. Upon successfully saving a preset the preset number that was chosen will be shown in the right corner.

Presets are only for the current band you are on. Each band FM1, FM2, FM3, AM1 and AM2 has six presets for a total of 30 (18x FM & 12x AM).

6.3 Automatically Save AM/FM Radio Stations to Memory

Press and hold the ESC/Preset button for 2 seconds to auto store stations to preset locations 1-6 of bands 1-3.

6.4 Listening to Saved Radio Memory

Press button 1, 2 or 3 to listen to preset 1, 2 or 3 respectively; or alternatively:

1. Press the ESC/Preset button to display your presets.
2. Turn the Rotary Selector to navigate to the desired preset.
3. Press the Rotary Selector to listen to the preset.

5.1 What Is DAB+ Digital Radio?

DAB+ Digital Radio provides access to hundreds of stations when used with Aquatic AV's Digital Radio Receiver AQ-DAB+ (sold separately). DAB+ is only available within certain countries - please check your local network for more information.

5.2 Listening to DAB+ Digital Radio

1. Connect the AQ-DAB+ Digital Radio Receiver (sold separately) to the stereo.
2. Enter DAB+ mode by pressing MODE and selecting DAB.
3. The first time DAB+ mode is used the stereo will automatically scan all available DAB+ stations.
4. If required, to re-scan for new stations, press and hold the ESC/Preset button for 2 seconds to scan all available DAB+ stations.
5. Navigate the available stations using the Fast Forward/Fast Rewind buttons.
6. Select the desired station by pressing the Rotary Selector button.
7. Press the Rotary Selector to change the DAB+ radio band.

When a DAB station is received the station's clock will auto update the stereo's clock.

Always ensure you connect and disconnect the stereo with dry hands!

5.3 Manually Save DAB+ Stations to Memory

1. Tune to the station you would like to be saved as a preset.
2. Press and hold the Play/Pause button and the stereo will display 'SAVE CH1'.
3. Turn the Rotary Selector to select the desired preset slot you would like to save the current station to.
4. Press the Rotary Selector to save the preset.
5. Upon successfully saving a preset the preset number that was chosen will be shown in the right corner.

Presets are only for the current band you are on. Each band has six presets for a total of 18 presets.

5.4 Automatically Save DAB+ Stations to Memory

Press and hold the ESC/Preset button for 2 seconds to auto store stations to numeric buttons 1-6 of bands 1-3.

5.5 Listening to Saved Radio Memory

Press button 1, 2 or 3 to listen to preset 1, 2 or 3 respectively; or alternatively:

1. Press the ESC/Preset button to display your presets.
2. Turn the Rotary Selector to navigate to the desired preset.
3. Press the Rotary Selector to listen to the preset.

2.3 Wired Remote Control WR6 (sold separately)

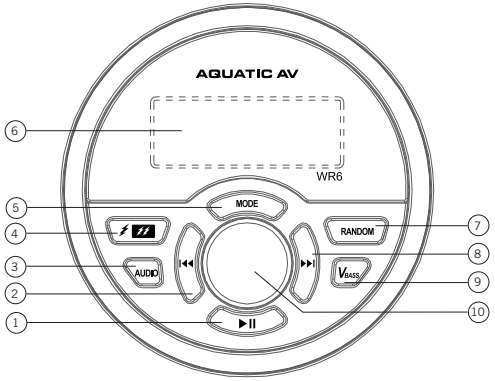

1. Play/Pause
2. Fast Rewind
3. Audio
4. 12V Triggers
5. Mode
6. LCD Display
7. Random Playback
8. Fast Forward
9. VBass
10. Rotary Selector

Button	Action	AM/FM	USB	BT	DAB	AUX
Audio	Short Press	Audio Menu: Bass - Treble - Balance - Fader - Beep - EQ - Loud				
	Long Press	Settings Menu: Dim H/L - PRI Info/Clk - P-Vol - Area US/Euro - Loc On/Off - Stereo/Mono - Clock Set - BT Off/Link - Restore				
Fast Rewind	Short Press	Seek Down	Previous Song	Previous Song	Previous Station	No Function
	Long Press	Manual Tune	Fast Rewind	No Function	No Function	No Function
Fast Forward	Short Press	Seek Up	Next Song	Next Song	Next Station	No Function
	Long Press	Manual Tune	Fast Forward	No Function	No Function	No Function
Play/Pause	Short Press	Mute	Play/Pause	Play/Pause	Mute	Mute
	Long Press	No Function	No Function	No Function	No Function	No Function
Mode/Disp	Short Press	Changes Source				
	Long Press	Display Clock/Info				
VBass	Short Press	Loud On/Off				
	Long Press	No Function				
Rotary Selector	Rotate	Volume Up/Down and Navigate Menus				
Power/Band (Push Rotary Selector)	Short Press	Power On / Band Change / Enter	Enter	Power On	Band Change / Enter	Power On
	Long Press	Power Off				
Random	Short Press	Ch.1 - Ch.2 - Ch.3 - Ch.1...	Random Playback On/Off	No Function	Ch.1 - Ch.2 - Ch.3 - Ch.1...	No Function
	Long Press	No Function	Repeat One / Repeat All	No Function	No Function	Display Software Version
12V Triggers	Short Press	12V DC Trigger 1 Output On/Off				
	Long Press	12V DC Trigger 2 Output On/Off				

Please note Aquatic AV does not recommend wired remote controls are used for spa or hot tub applications as use in such applications is not covered by warranty.

3.1 Listening via Bluetooth

The Bluetooth Audio menu is accessible by pressing the Audio/Menu button and is used to connect a Bluetooth Audio device or disconnect a Bluetooth Audio device that has already been paired.

3.2 Pair with Bluetooth Audio Device

1. Enable Bluetooth Audio mode by pressing MODE and selecting Bluetooth.
2. Switch on your Bluetooth Audio device.
3. Select 'CP6' from the list of available devices to pair. No password should be required however if prompted for a password use '0000'.
4. A Bluetooth logo will illuminate on the stereo's LCD to verify Bluetooth is connected.

3.3 Listening via Bluetooth Audio Device

1. Bluetooth Audio mode will be activated once a Bluetooth Audio device is paired in any mode. Use MODE to change to Bluetooth Audio mode to listen to music from your device.
2. Play the song from device and the sound will play through the stereo.
3. Press PLAY/PAUSE to play/pause the song.
4. Press FAST REWIND/FORWARD buttons to play previous/next song file.
5. Previous/next track and volume up/down can also be controlled directly from your Bluetooth Audio device.

3.4 Bluetooth Multi-link

A second Bluetooth Audio device can pair to the stereo even when music is playing from the first Bluetooth Audio device.

Once paired, playing music from device 2 will override device 1 and the stereo will begin playing music from device 2.

Should you wish to play music from device 1 again, wait 10 seconds and press play on device 1. This process can be repeated between device 1 and device 2 indefinitely while both devices are paired.

4.1 Listening via USB

1. Attach your USB thumb drive to the female USB connector.
2. If your USB device is readable then USB source mode will be automatically selected and your compatible content will begin to play.
3. Press PLAY/PAUSE to play or pause the music.
4. Press FAST REWIND / FAST FORWARD once play previous / next song file.
5. Press and hold FAST REWIND / FAST FORWARD to fast forward / fast rewind the song file.

Playback and navigation of music files via USB includes MP3 and WMA files.

4.2 Direct Search by Folder/File

1. Press ESC/Preset once and display will show 'DIR SCH'
2. Turn the Rotary Selector to select a desired folder. (If you have files in the Root, select 'Root'). Then press the Rotary Selector to enter into that folder.
3. Turn the Rotary Selector to select the desired file that you wish to play. Only compatible files will be displayed.
4. You can either allow the unit to auto select the track that is being displayed or press the Rotary Selector to select the desired track.

4.3 Direct Search by Track number

1. Press ESC/Preset twice and the display will show 'NUM SCH'
2. Turn the Rotary Selector to select the desired track number. Turning clock-wise will increase the track number and turning anti-Clock-wise will decrease the track number.
3. You can either allow the unit to auto select the track that is being displayed or press the Rotary Selector to select the desired track.

4.4 Random Playback

Press the RDM button to toggle Random Play on or off.

4.5 Repeat Playback

Press the RPT button to toggle Repeat One or Repeat All.

4.6 Device Charging

When specified USB devices such as Smartphones or MP3 players are connected with a standard male-to-female USB cable the device's battery will charge automatically. The USB connection will deliver 2.1A of current to charge a device battery.