14-Function Foot Control Panel
Upgrade Kit
Wired (FCP)
Wireless (FCP WL)

Instructions for use

G-30-1707-en

Version 4.0

2017-05-11

About this manual

The user manual is part of the scope of delivery.

- Carefully read it before using the device.
- Keep it at the site of use of the foot control panel.
- Store it for the entire service life of the foot control panel.
- Pass it on to every subsequent owner or user of the foot control panel.

Orientation aids

– The chapter overview at the beginning of the user manual provides a summary of all subjects.

– The contents of each chapter are specified in detail at the beginning of each chapter.

– A keyword index at the end of the manual facilitates the search for specific terms.

Applicable area

This user manual applies to foot control panels with the following identification:

– Type label numbers:
304970-9100-000 / 304970-9200-000
304970-9300-000 / 304970-9400-000

Manufacturer

Carl Zeiss Meditec AG
Goeschwitzer Strasse 51-52
07745 Jena
Germany

Fax: + 49 (0) 7364 - 20 4823
E-mail: info.meditec@zeiss.com
Internet: www.zeiss.com/med

Subject to changes in design and scope of delivery and as a result of ongoing technical development. Printed in Germany.

Copyright

© Carl Zeiss Meditec AG 2017
All rights reserved. Reprints and reproductions - including excerpts - are not permissible. However, this user manual may be digitized and archived for internal use. Access to this data by third parties is not permissible and must be prevented.

Chapter overview

Chapter: Safety measures **5**

Chapter: Design and function **21**

Chapter: Preparations for use **39**

Chapter: Operation **57**

Chapter: What to do in the event of malfunctions **65**

Chapter: Care and maintenance **71**

Chapter: System data **75**

Chapter: Index **89**

Safety measures

We would like to provide you with information about safety aspects which must be observed when handling this foot control panel. This chapter contains a summary of the most important information concerning matters relevant to instrument safety.

Key to the symbols in this user manual 6
Hazard symbols 6
Information symbols 7

Directives and standards 7

Target group 8

Field of application 8
Intended use 8
Normal use 8
Typical misuse 8

Notes for the operator 9
Duties of the operator 9
Requirements to be met by the user 12
Warranty and liability 12

Requirements for operation 13
Before every use 13
During use 13
After every use 13

Symbols and labels on the foot control panel 14
Labels on the foot control panel 14
Labels on the FCP upgrade kit 18

Key to the symbols in this user manual

Hazard symbols

The following safety information has been incorporated into the Instructions for Use. Please note this information and be particularly careful in these cases.

⚠ **WARNING**	Indicates a hazard which **can lead to death** or **severe injury** if it is not prevented.
⚠ **CAUTION**	Indicates a hazard which can cause **minor** to **moderate injury** if it is not prevented.
NOTE	Indicates a hazard which can cause **damage to material** if it is not prevented.

Information symbols

The following information symbols are used in these instructions for use:

– Listing

✓ Prerequisite for an action

• Prompt for action

→ Result of an action

Additional information and tips. No warnings of hazards are provided.

Directives and standards

The foot control panel described in these instructions for use was constructed and tested in accordance with ZEISS safety standards as well as national and international regulations. This guarantees a high degree of safety.

The foot control panel has been designed in compliance with the requirements of:

– EN (European standard)

– IEC (International Electrotechnical Commission)

– UL (Underwriters Laboratories)

In accordance with Directive 93/42/EEC for medical devices, the complete quality management system of the company Carl Zeiss Meditec AG, 07745 Jena, Germany, has been certified by DQS Deutsche Gesellschaft zur Zertifizierung von Managementsystemen GmbH, a notified body, under registration number 263168 MP23CMDR.

Target group

These instructions for use are intended for physicians, nurses and other medical staff who prepare, operate or maintain the foot control panel after appropriate training and in accordance with the instructions given in this manual. Installation, maintenance and repair work not described in these instructions may be performed only by ZEISS specialists.

Field of application

Intended use

The FCP foot control panel upgrade kit is an accessory for upgradable surgical microscopes from Carl Zeiss, see also Page 36. It enables operation of the motor-driven and controllable functions of the microscope by foot control.

Normal use

This foot control panel permits either wireless or wired operation of up to 14 different functions of a surgical microscope, including its options, by foot control.

Typical misuse

- Operation of the foot control panel with devices not made by ZEISS.
- Operation of the foot control panel with devices other than those specified on Page 36.
- Operation of the foot control panel without pairing with the suspension system.

Notes for the operator

The correct use of the foot control panel is absolutely vital for safe operation. Therefore, please thoroughly familiarize yourself with the content of this user manual before starting up the foot control panel. Please also observe the user manuals of the other devices used. Further information is available from our service department or from authorized representatives.

Duties of the operator

Notes on the foot control panel

- Make sure that the installation conditions and the use of the foot control panel meet microsurgical requirements:
  - low vibration
  - clean environment
  - avoidance of extreme mechanical stress.
- Observe the legal regulations for accident prevention and occupational health and safety applicable in the country concerned.
- Do not operate the components contained in the delivery package
  - in explosion-risk areas,
  - in oxygen-enriched environments,
  - if inflammable anesthetics or volatile solvents such as alcohol, benzine or similar chemicals are present at a distance of less than 25 cm.
- Switch off the connected foot control panel and remove the batteries if you notice any smoke, sparks or unusual noise. Do not use the foot control panel until it has been repaired by our service team.
- Do not force electrical connections. If a connector does not fit a socket, check whether they are intended for one another. If you find the connection to be defective, attach a sign to the foot control panel stating it is out of order. Do not continue using the foot control panel and have the damage repaired by our service staff.
- Over long distances (e.g. relocation, return for repair, etc.), the foot control panel must always be transported in the original packaging or in special return packaging. Please contact your dealer or ZEISS Service for this purpose.

- Use the foot control panel only for the application described.
- Operate the foot control panel only with the components included in the delivery package. If you wish to use other components, check beforehand that the safe use of these components has been documented and confirmed by ZEISS or the manufacturer of the components.
- If a failure occurs which you cannot correct with the aid of the chapter "What to do in the event of malfunctions", attach a sign to the foot control panel stating it is out of order and contact our service representative.
- The foot control panel must not be modified without the manufacturer's approval.
- The foot control panel is a high-grade technological product. To ensure optimum performance and safe working order, we recommend having it checked on a regular basis by our service representative or trained specialist staff.

Notes on EMC (Electromagnetic compatibility)

The foot control panel complies with the EMC requirements of IEC 60601-1-2. When the foot control panel is used, compliance with the EMC precautions specified below is required:

- Use the foot control panel only with the combinations specified in the instructions for use. These have been tested and approved by ZEISS.
- Do not use any portable or mobile RF communication equipment in the vicinity of the foot control panel as this may lead to an impairment of the foot control panel's function.
- The foot control panel meets the EMC criteria for limit class B. However, interference with RF reception devices (e.g. TV or radio devices) in the surrounding area cannot be ruled out. Should interference be noted, please notify ZEISS Service.

Information on exposure to radio frequency radiation in accordance with FCC regulations

The emitted output power of the component is far below the FCC limit values for radio frequency exposure. Nevertheless, the component should be used in such a way that potential contact with persons during normal operation is kept to a minimum.

NOTE:

Classification for Canada

This Class B digital component complies with Canadian standard ICES-003.

NOTE:

Limit values and what to do in the event of interference with digital equipment

This component has been tested and found to comply with the limits for a Class B digital device in accordance with Part 15 of FCC regulations. These limits have been stipulated to provide adequate protection against harmful exposure when the component is operated in residential areas. This component generates and uses radio frequency energy and may emit such energy. If it is not installed and used in compliance with the relevant instructions, it can cause harmful interference in radio communication. However, there is no guarantee that interference will not occur in a particular installation. If this component causes interference with radio and TV reception, which can be determined by turning the component off and on, the user should try to correct the interference by one or several of the following measures:

- Relocate or reorient the receiving antenna.
- Move the component further away from the receiver.
- Plug the component into a different outlet so that it is not on the same circuit as the receiver.
- Consult an experienced radio/TV technician.

NOTE:

Part 15 of FCC regulations

This component complies with Part 15 of FCC regulations [and with the Industry Canada RSS-210 standard].

Operation of the component is subject to the following two conditions:

- the components may not cause any harmful interference and
- the component must accept any interference received, including interference that may cause undesired operation.

NOTE:

Modification or conversion

Modifications or conversions that are not explicitly approved by ZEISS will invalidate the FCC approval for the operation of this component.

Requirements to be met by the user

- The foot control panel must only be used by staff who have undergone appropriate training and instruction. It is the duty of the customer or institution operating the component to provide training and instruction for the relevant staff.
- Please keep these Instructions for Use where they are easily accessible at all times for the persons operating the system.
- Modifications and repairs of the foot control panel or any components operated together with the foot control panel may only be performed by our service representative or by other authorized persons.

Warranty and liability

Warranty and liability depend on the applicable contractual stipulations.

NOTE

Loss of warranty

The manufacturer is not liable for any damage caused by unauthorized persons tampering with the foot control panel. Furthermore, this will forfeit any rights to claim under warranty.

Requirements for operation

Our service representative or an expert authorized by us will install the foot control panel. Please ensure that the following requirements are met for further operation:

✓ The connecting components have been properly connected. The screw connections have been firmly tightened.

✓ All cables and connectors are in a perfect condition, i.e. they do not display any worn areas, kinks or other defects.

Before every use

- Make sure that all ”Requirements for operation” are fulfilled.
- Go through the checklist.
- Reattach any covers or caps that were removed from the foot control panel. Close any existing openings with the corresponding caps.

During use

- Constantly monitor the foot control panel during use.

After every use

- After wireless operation, put the foot control panel in its rest position to save energy, see Page 63

Symbols and labels on the foot control panel

Labels on the foot control panel

CAUTION

Note the warning labels and notes!

- If you notice that any label on your foot control panel is missing or has become illegible, please contact us or one of our authorized representatives. We will supply a replacement.

! **1** "Ready for use" status indicator

2 Connection status indicator

3 Radio link intensity status indicator

4 Battery status indicator

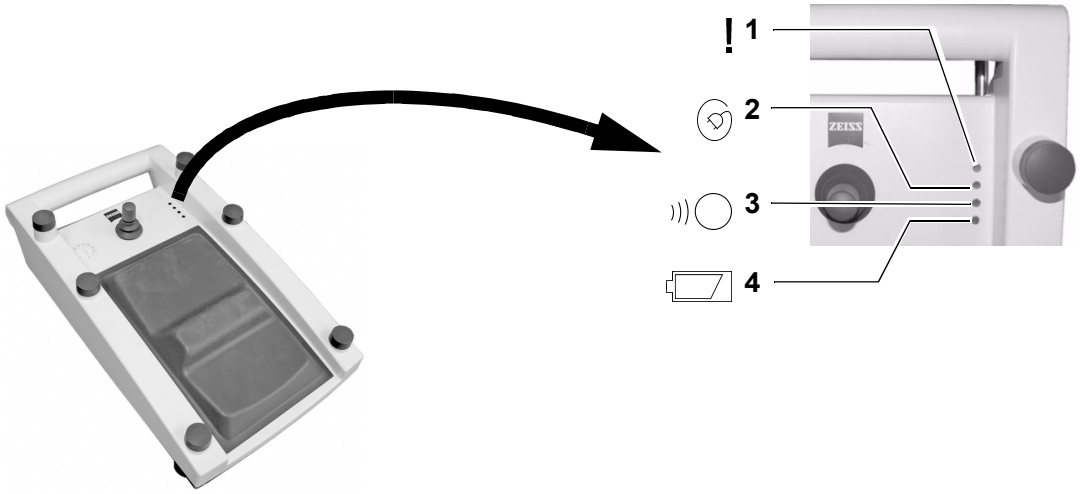
1
2
3
4
ZEISS

1A

1B

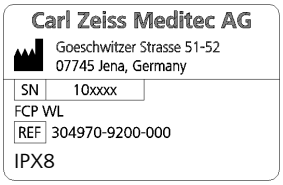

1 Type plate

The type plate contains the following information:

– Manufacturer symbol	
– Manufacturer (company name)	Carl Zeiss Meditec AG
– Address of the manufacturer	Goeschwitzer Strasse 51-52 07745 Jena, Germany
– Serial Number	SN
– Device name (version with power cord)	FCP
– Device name (wireless version)	FCP WL
– Reference number	REF
– Protection type	IPX8

2 "Comply the user manual" label

Comply with the user manual or further applicable documents.

3 "Comply with disposal regulations" label

Electrical or electronic devices must not be disposed of as normal domestic waste. For more information on the disposal of electrical and electronic devices, please see the chapter "Maintenance and care".

4 Date of manufacturing

This graphical symbol indicates the manufacturing date of the device.

5 Radio frequency approval labeling

See also document G-30-2021 (Radio Approval Information).

6 "Do not use any rechargeable batteries" label

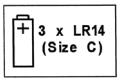

7 "Number and type of batteries to be used" label
3 x LR 14 (Size C)

8 "Battery position, correct polarity" label

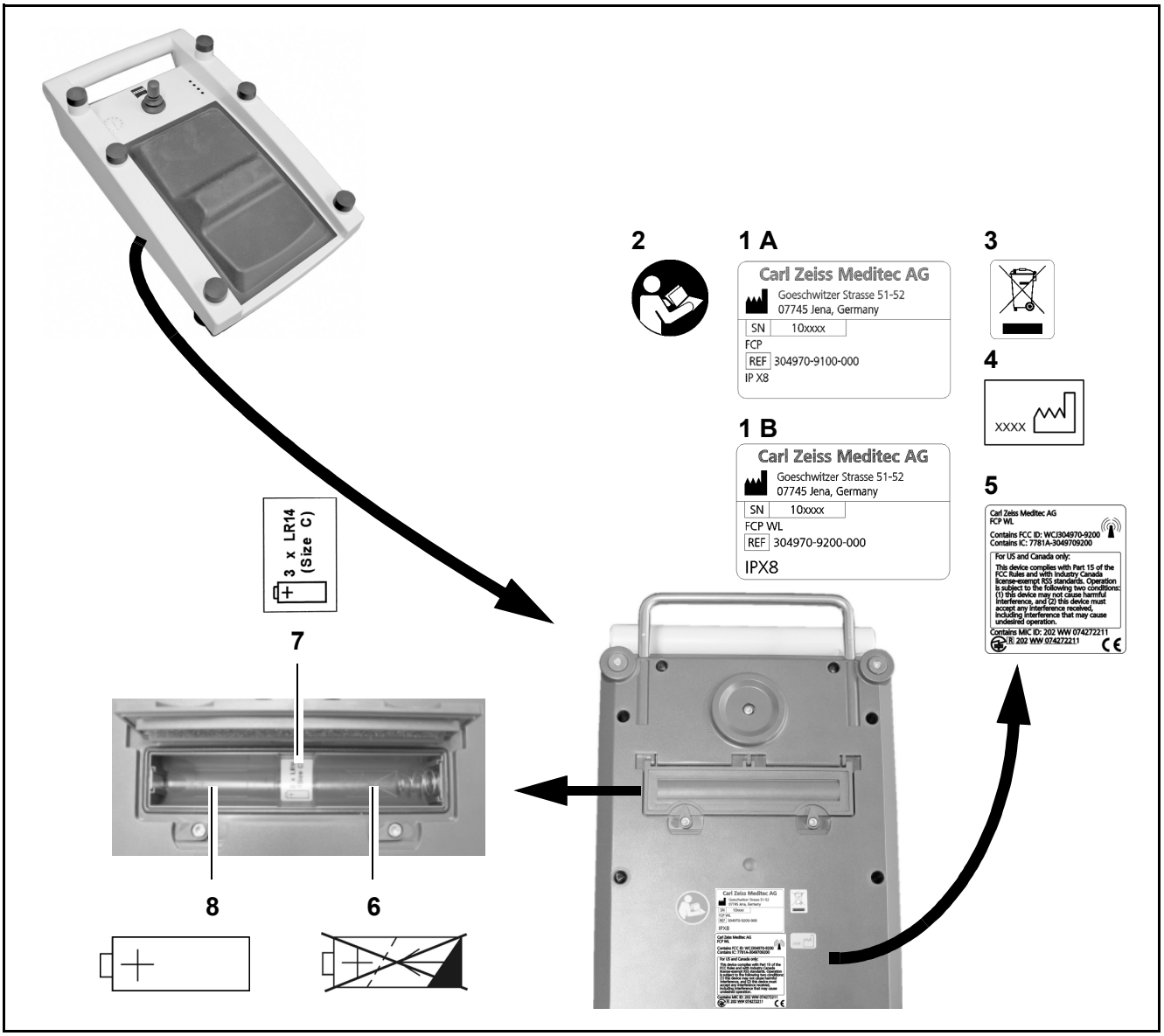

Labels on the FCP upgrade kit

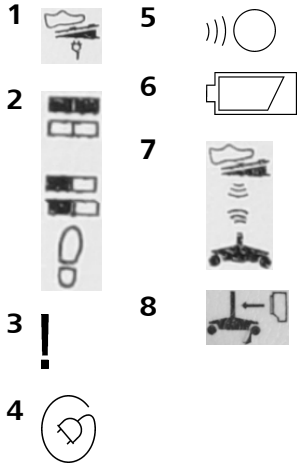

1 "Socket for connecting cable" label

2 "Orientation switch" label

3 "Ready for use" status indicator

4 Connection status indicator

5 Radio link intensity status indicator

6 Battery status indicator

7 "Pairing button" label

8 Identification of connection with multi-point connector on suspension system

9A

9B

9 Type label
The type labels list the following information:

– Manufacturer symbol	
– Manufacturer (company name)	Carl Zeiss Meditec AG
– Address of the manufacturer	Goeschwitzer Strasse 51-52 07745 Jena, Germany
– Serial Number	SN
– Device name (version with power cord)	FCP interface
– Device name (wireless version)	FCP WL interface
– Reference number	REF

10 Radio frequency approval labeling
See also document G-30-2021 (Radio Approval Information).

11 "Comply with disposal regulations" label
Electrical or electronic devices must not be disposed of as normal domestic waste. For more information on the disposal of electrical and electronic devices, please see the chapter "Maintenance and care".

12 "Comply the user manual" label
Comply with the user manual or further applicable documents.

13 Pairing label
Label on the FCP upgrade kit indicating the foot control panel paired with the upgrade kit in the wireless mode.

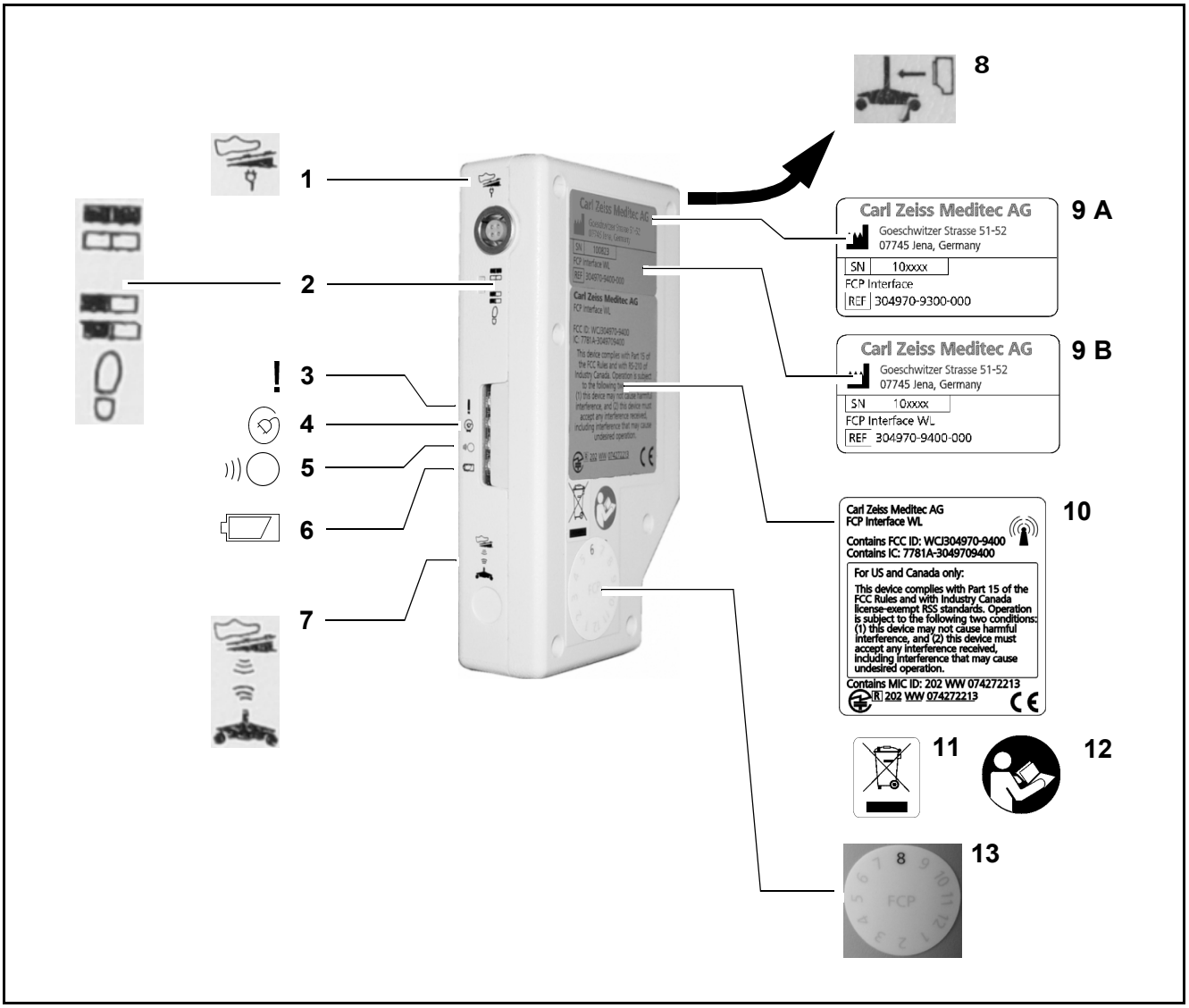

Design and function

Versions of the foot control panel **23**

Components of the foot control panel **24**

Standard assignment in the longitudinal configuration **30**

Standard assignment in the transverse configuration **32**

Pressure compensation membrane of the FCP **35**

FCP upgrade kit **36**

Versions of the foot control panel

1 Wireless foot control panel with 14 functions - top view

2 Wired foot control panel with 14 functions - rear view with inserted connecting cable

1

2

Components of the foot control panel

1 Connecting cable - if provided
Connects the foot control panel to the appropriate connector on a suspension system or wall-mounted control panel.

2 Bracket
Allows you to hang up the foot control panel e.g. on the floor stand when not in use.

3 Controls
Buttons operated with your foot.

4 Indicator
This indicator is only required for the wireless version. The adjustable indicator has no electronic function. It serves as a marker and indicates the assignment to an FCP upgrade kit after pairing.

5 Joystick
Permits you to control e.g. an X-Y coupling or other functions, depending on the surgical microscope used.

6 Rocker switch
The two rocker switches are used to operate the ”Zoom” and ”Focus” functions. For this, each of the rocker switches contains two switching elements, allowing you to control the functions by toe and heel movement without the need to shift your foot.

You can optionally assign the ”Zoom” and ”Focus” functions to the switching elements of the rocker switches. The setting is changed on the FCP upgrade kit, see Page 36.

A Longitudinal configuration:
The left switching elements of the rocker switches are used to operate the ”Zoom” function. The right switching elements of the rocker switches are used to operate the ”Focus” function. For more information, please see Page 30.

B Transverse configuration:
The switching elements of the front rocker switch are used to operate the ”Focus” function. The switching elements of the back rocker switch are used to operate the ”Zoom” function. For more information, please see Page 32.

7 Foot rest
The bridge between the two rocker switches (6) serves as a support to rest your foot on.

8 Status indicators
Indicate different statuses by shining/not shining.

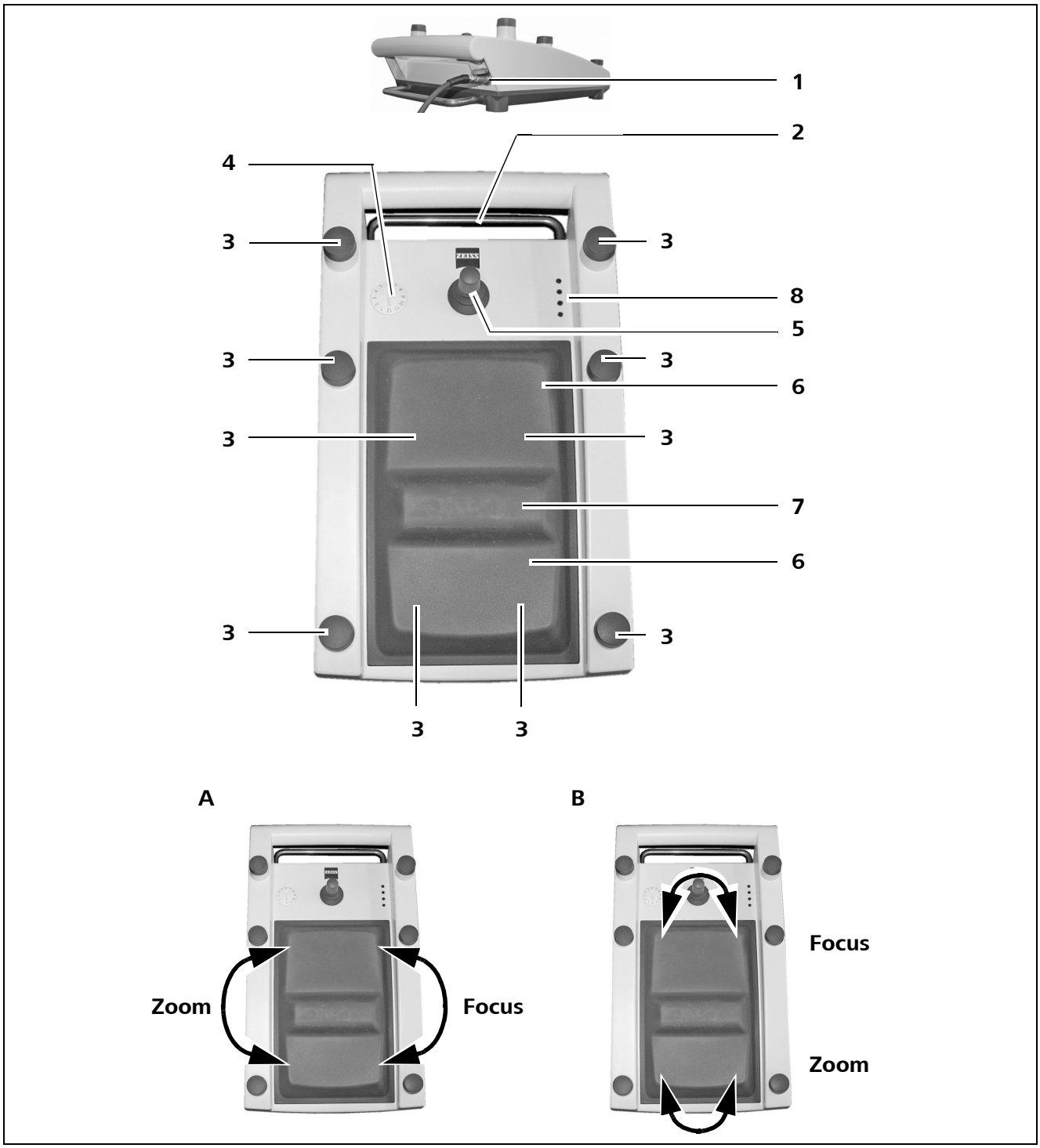

Functions of the status indicators

– During wireless operation, the "ready for use", "radio link intensity" and "battery" status indicators are only lit when you simultaneously press a button each on the left and right side of the foot control panel. The status indicators are only lit while you press the buttons.

– During wired operation via the connecting cable (if provided), the "ready for use" and "connection" status indicators are permanently lit.

1 "Ready for use" status indicator
In the wired mode only.

– Shining green: the foot control panel is ready for use, no error is present.

– Shining amber: the foot control panel detects a temporary error and eliminates it automatically.

– Shining red: the foot control panel is not ready for use, an error is present.

2 Connection status indicator

– Not shining: the foot control panel operates in the wireless mode.

– Shining green: the connecting cable (if provided) has been plugged in, power supply is present.

3 Radio link intensity status indicator
In the working position only, when the radio link is active

– Not flashing: the foot control panel is in operating mode 4 or 5, see Page 61.

– Flashing green: very good radio link

– Flashing amber: reduced radio link, e.g. due to slight interference, shielding or too large a distance between the suspension system and foot control panel.

In the rest position during pairing only

– Flashing amber: while pairing with the suspension system is in progress.

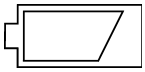

4 Battery status indicator

- Not flashing: batteries are OK.
- Flashing amber: batteries will not last much longer.
  - Obtain replacement batteries and keep them ready at hand.
- Flashing red: batteries are depleted and need to be replaced immediately.

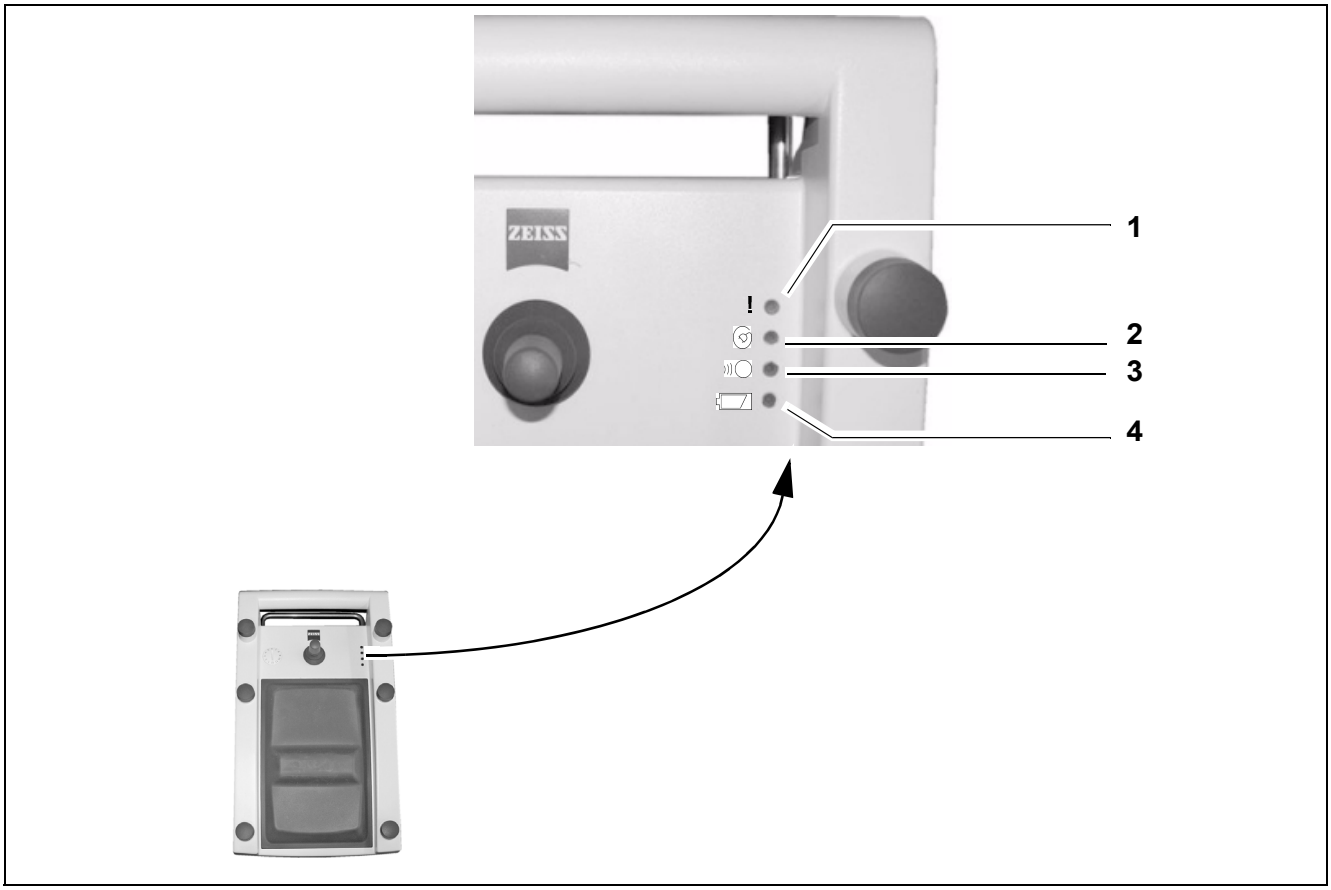

Functions of the acoustic notification signals

Acoustic notification signal	Cause	Remedy
Single beep	Confirms a function	--
Double beep	Caution	• Check the status indicators, see Page 26.
Triple beep	Problem	• see "Troubleshooting"

Standard assignment in the longitudinal configuration

The longitudinal configuration refers to the focus and zoom functions.

Joystick
The joystick permits control in the following four directions:

1 foreward,

2 backward,

3 left,

4 right.

5 Switch
Function depends on surgical microscope used

6 Switch
Function depends on surgical microscope used

7 Focus down
Focusing on a lower plane

8 Focus up
Focusing on a higher plane

9 Switch
Function depends on surgical microscope used

10 Switch
Function depends on surgical microscope used

11 Zoom in
Increasing magnification, the field of view is reduced

12 Zoom out
Reducing magnification, the field of view is increased

13 Switch
Function depends on surgical microscope used

14 Switch
Function depends on surgical microscope used

You can switch the orientation from longitudinal to transverse or vice versa (see Page 36).

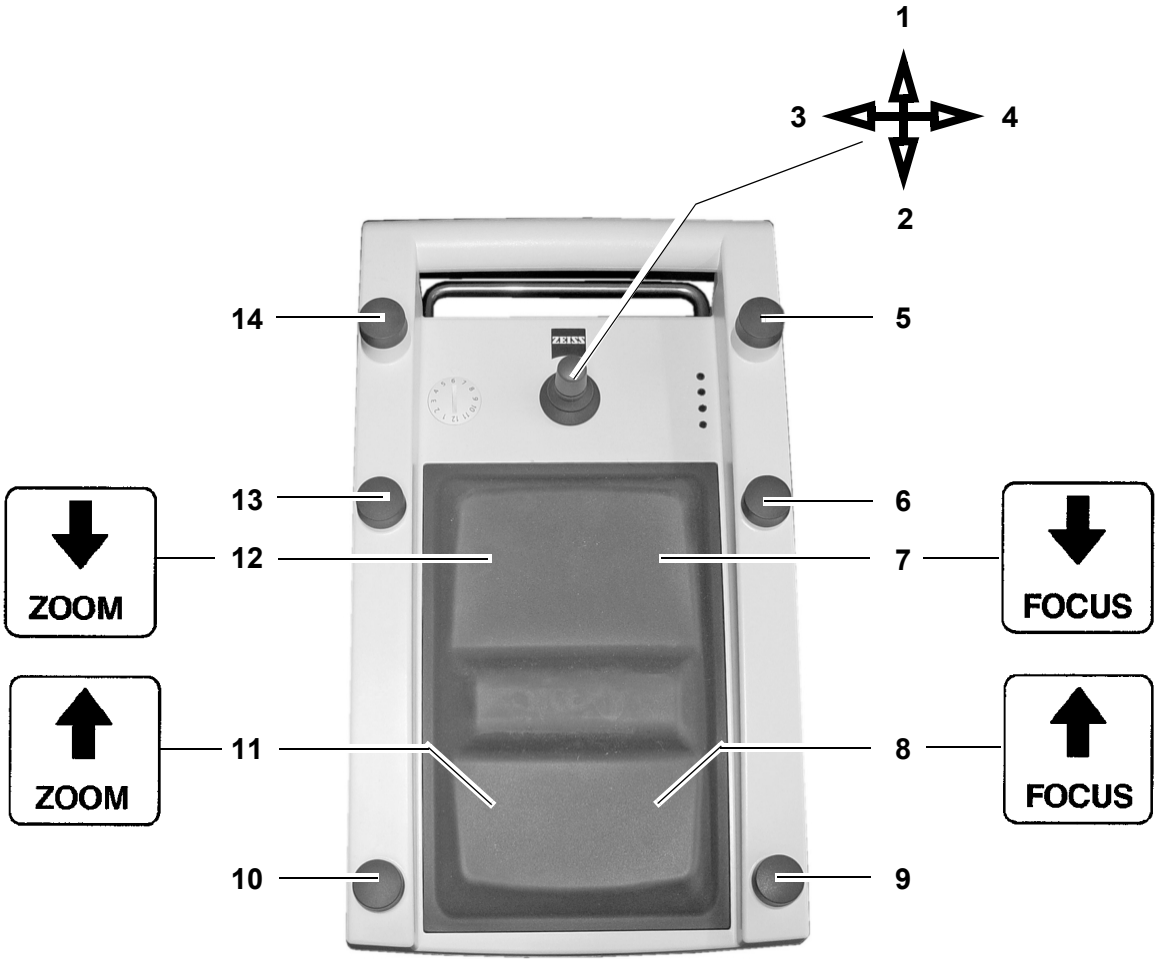
1
2
3
4
5
6
7
8
9
10
11
12
13
14
ZOOM
ZOOM
FOCUS
FOCUS

Standard assignment in the transverse configuration

The transverse configuration refers to the focus and zoom functions.

Joystick
The joystick permits control in the following four directions:

1 foreward,

2 backward,

3 left,

4 right.

5 Switch
Function depends on surgical microscope used

6 Switch
Function depends on surgical microscope used

7 Focus down
Focuses on a lower plane

8 Focus up
Focuses on a higher plane

9 Switch
Function depends on surgical microscope used

10 Zoom out
Reduces magnification, the field of view is increased

11 Zoom in
Increases magnification, the field of view is reduced

12 Switch
Function depends on surgical microscope used

13 Switch
Function depends on surgical microscope used

14 Switch
Function depends on surgical microscope used

You can switch the orientation from longitudinal to transverse or vice versa (see Page 36).

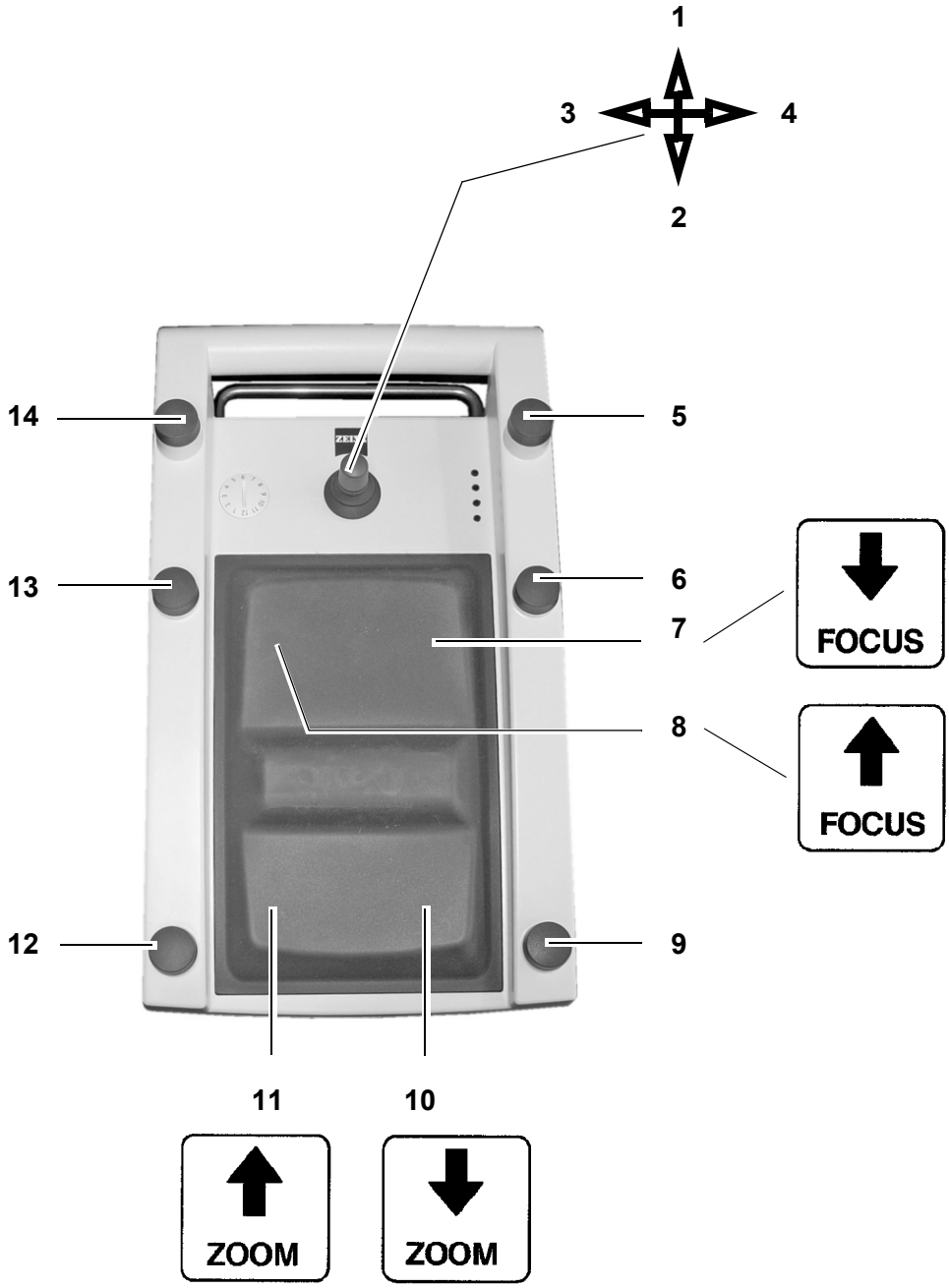
1
2
3
4
5
6
7
8
9
10
11
12
13
14
FOCUS
FOCUS
ZOOM
ZOOM

Pressure compensation membrane of the FCP

1 Pressure compensation membrane of the FCP
The foot control panel is IPX8-protected. A membrane has been installed to permit pressure compensation between the foot control panel and its environment.

No work needs to be performed on the membrane.

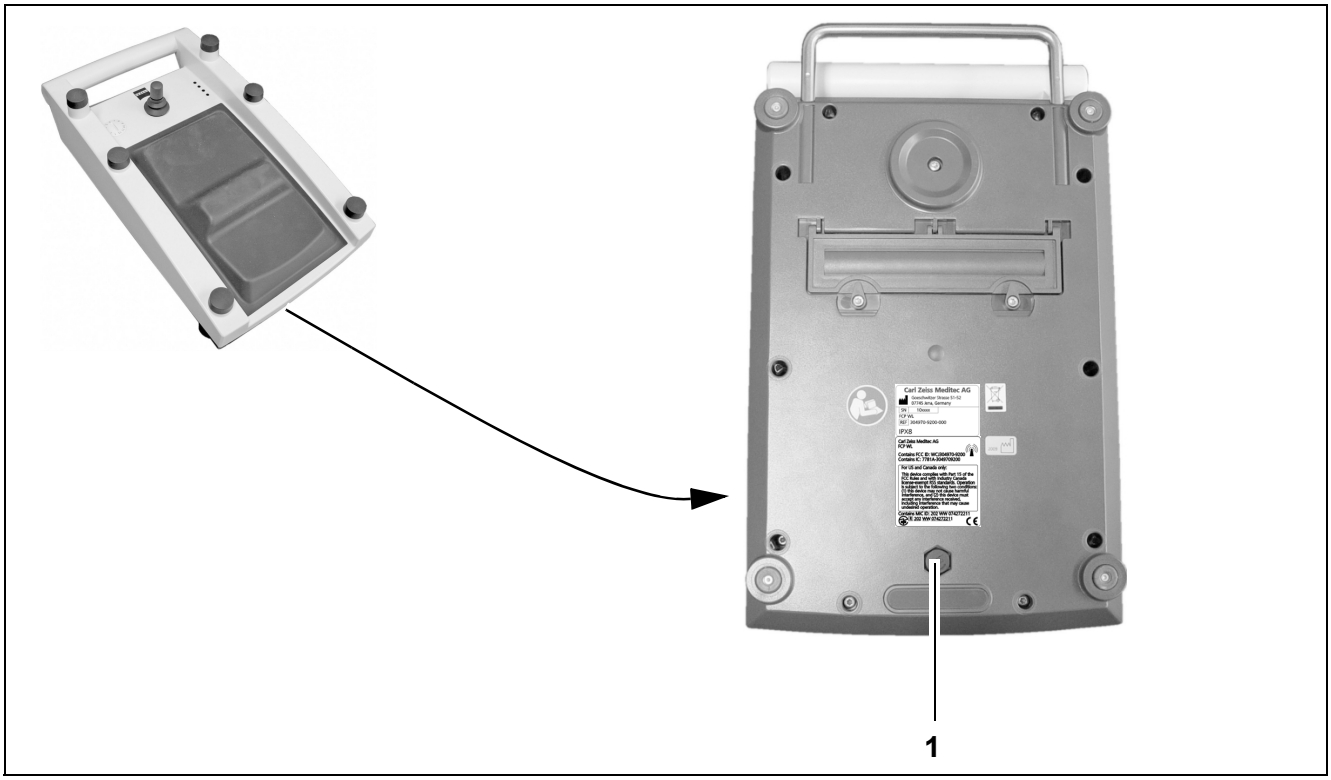

FCP upgrade kit

NOTE

Upgradable surgical microscopes

- Surgical microscopes on the S7, S8, S81, S88 suspension systems as well as OPMI Pentero are only compatible with the foot control panel if retrofitted with the FCP upgrade kit.
- Other systems than those specified above cannot be upgraded.

Components of the FCP upgrade kit

1 Socket for connecting cable
Connection of the foot control panel via a connecting cable (if provided).

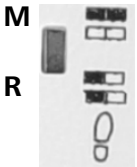

2 Orientation switch
Specifies the orientation of the focus and zoom functions.

- Transverse orientation (A) (see Page 32)
- Longitudinal orientation (B) (see Page 30)

The default factory setting is longitudinal orientation (B). You can set the switch to transverse orientation (A) as required. To do so, push the switch upward using a small screwdriver.

3 "Ready for use" status indicator

- Shining green: The foot control panel is ready for use; there are no errors.
- Shining amber: The foot control panel has detected a temporary fault and corrects this independently.
- Shining red: The foot control panel is not ready for use; there is an error.

4 Connection status indicator

- Not shining: The foot control panel is operating in wireless mode.
- Shining green: The connecting cable (if provided) is plugged in; the electric power supply is available.

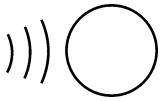

5 Radio link intensity status indicator

- Shining green: Excellent radio link.
- Shining amber: Reduced radio link, e.g. due to slight interference, shielding or too large a distance between the suspension system and foot control panel.
- Flashing amber: While pairing with the suspension system is in progress.

6 Battery status indicator

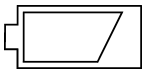

- Not shining: The batteries are OK.
- Shining amber: The batteries will not last much longer. No immediate action required.
- Shining red: The batteries are depleted and need to be replaced immediately.

7 Pairing button

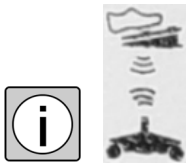

Pairing is the term used to describe the fixed relative assignment of the suspension system and foot control panel. A short press of the button starts the pairing between the foot control panel and the suspension system. A longer press of the button (> 5 s) deletes the current pairing.

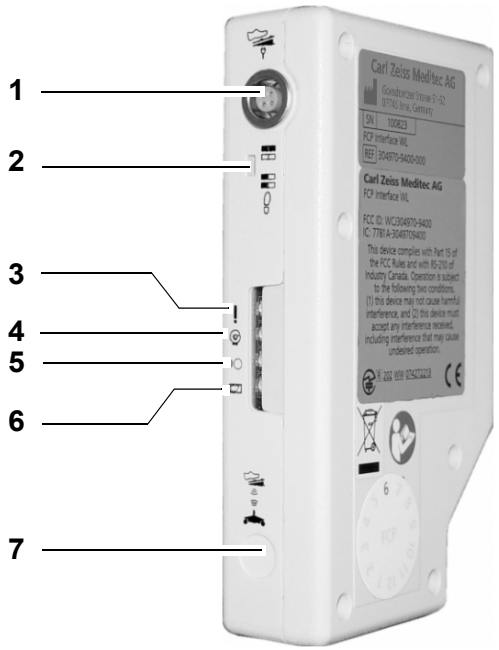

Preparations for use

Installing the FCP upgrade kit 40
Preparatory work on OPMI Pentero 40
Connecting the upgrade kit 42

Inserting the batteries for wireless operation 44

Pairing with the suspension system/upgrade kit 46

Connecting the connection cable 50

Exchanging the joystick head 53

Bringing the foot control panel into its working position 54

Adapter plate for operating chair 56

Installing the FCP upgrade kit

Preparatory work on OPMI Pentero

If the FCP upgrade kit (1) is used on OPMI Pentero (3), you have to use a 90° BNC connector 000000-0144-636 (2) as the installed FCP upgrade kit covers the BNC socket on OPMI Pentero, and the cable for the external monitor cannot be simultaneously connected unless this type of connector is used.

✓ Orientation switch (4) must be in the "longitudinal configuration" position (5) which is the factory setting.

- Plug the 90° BNC connector (2) in the BNC socket on OPMI Pentero (3).

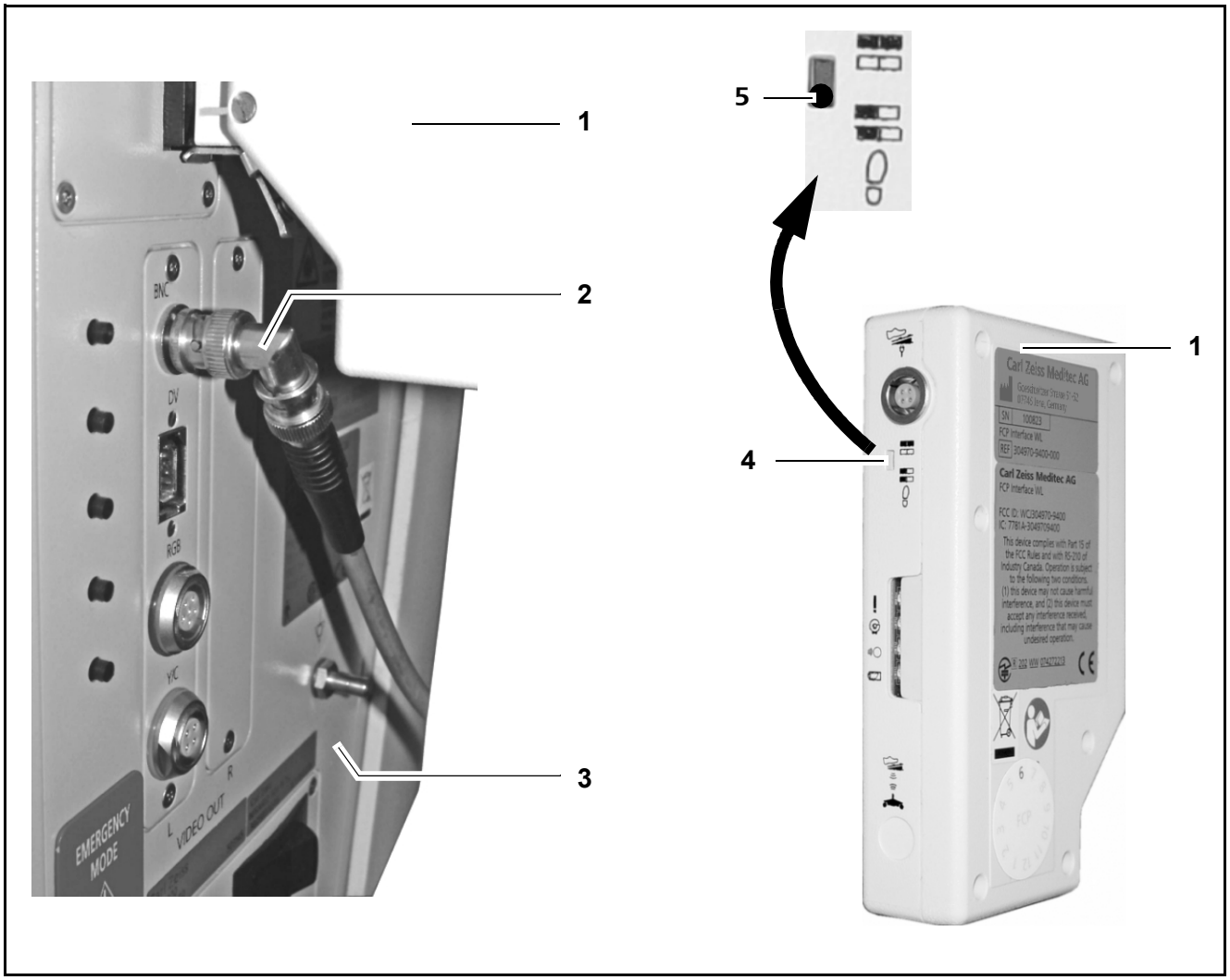
1
2
3
5
4
1
BNC
DV
RGB
VIC
L
R
VIDEO OUT
EMERGENCY MODE
Carl Zeiss Meditec AG
FCP Interface WL
Carl Zeiss Meditec AG
FCP Interface WL

Connecting the upgrade kit

NOTE

Upgradable surgical microscopes

– Surgical microscopes on the S7, S8, S81, S88 suspension systems as well as OPMI Pentero are only compatible with the foot control panel if retro-fitted with the FCP upgrade kit.

– Other systems than those specified above cannot be upgraded.

✓ The suspension system must feature a multi-point connector (4).

✓ The suspension system and surgical microscope must be powered down.

• Align head (1) with counterpart (3) on the multi-point connector.

• Push FCP upgrade kit (2) against the multi-point connector, see (5), until you hear the FCP upgrade kit snap into position.

→ The FCP upgrade kit is now operational (6).

When used with OPMI Pentero, the functions of the foot control panel can be configured via the suspension system.

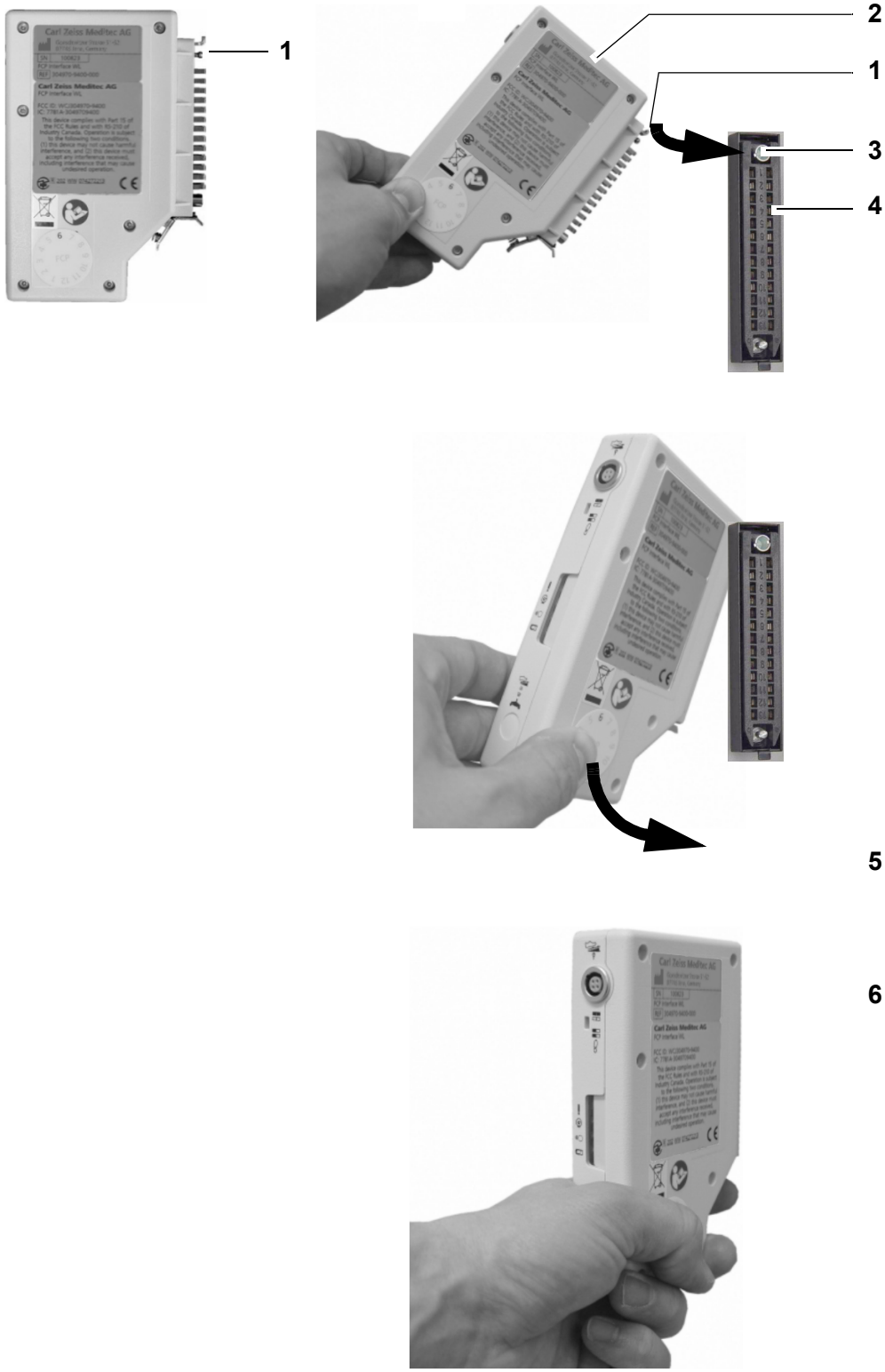
1
2
1
3
4
5
6

Inserting the batteries for wireless operation

NOTE

The wrong type of batteries may damage the foot control panel or impair its function.

- Only use C type 1.5 V alkaline-manganese batteries (also see the chapter "Technical data") which you can obtain from retail outlets.
- Do not use any rechargeable batteries. The operating duration with rechargeable batteries has not been defined.

- Turn the two locks (1) on the battery compartment from the 12 o'clock position to the 9 o'clock position. If you press on the cover of the battery compartment (2) in the area of the locks, the locks are easier to open.
- Open the cover of the battery compartment (2).
- Insert three C type batteries in the battery compartment, ensuring that the polarity is correct. The polarity is shown at the bottom of the battery compartment (3).
- Close the cover of the battery compartment (2).
- Turn the two locks (1) on the battery compartment from the 9 o'clock position back to the 12 o'clock position.

Leaking battery fluid may damage the foot control panel. Remove the batteries from the battery compartment if you will not by using the foot control panel for a prolonged period of time.

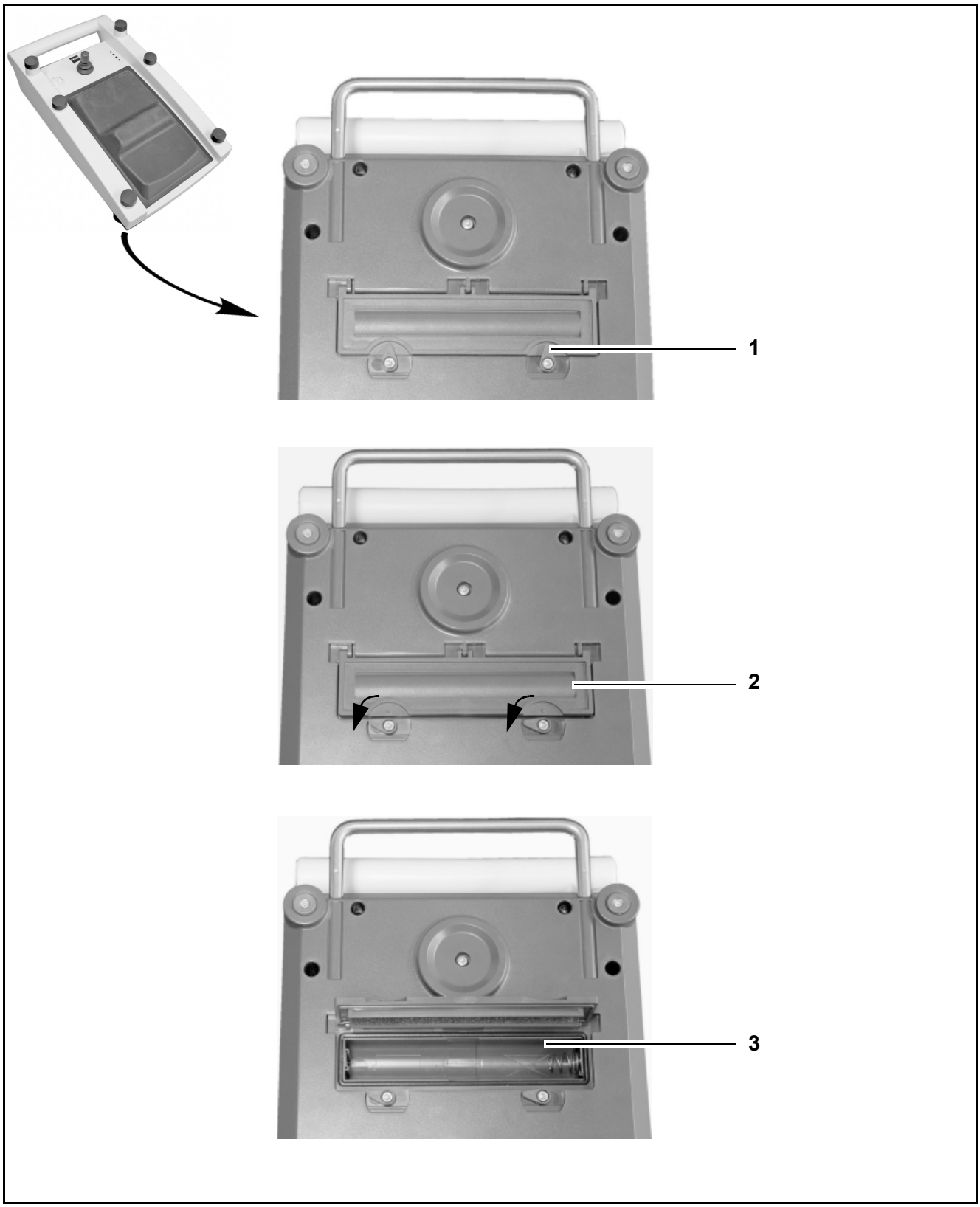
1
2
3

Pairing with the suspension system/upgrade kit

NOTE

The foot control panel may be disabled.

- If pairing is performed incorrectly or not at all, the foot control panel may be disabled, or activation of a control may trigger functions on a different suspension system not assigned to the foot control panel.

– Pairing means the fixed relative assignment of the suspension system and foot control panel.
Pairing must only be performed for wireless operation.

– On first-time pairing, it may take up to 20 s until the radio link between the FCP upgrade kit and the foot control panel has been established.

- Switch on the suspension system.
- Put the foot control panel in a vertical position (1) in the immediate vicinity of the suspension system (distance of less than 1 m).
- Delete the previous pairing by pressing "Pairing" button (9) on the FCP upgrade kit for more than 5 s and hold down the button.

→ "Radio link intensity" status indicator (7) on the FCP upgrade kit shines amber. The existing pairing has been deleted.

- Release "Pairing" button (9) on the FCP upgrade kit.

→ "Radio link intensity" status indicator (7) on the FCP upgrade kit is no longer shining.

- Press any button (3) on the foot control panel for approx. 5 s and hold the button down.

→ "Radio link intensity" status indicator (7) on the foot control panel starts flashing amber.

- Release button (3) on the foot control panel.

→ "Radio link intensity" status indicator (7) on the foot control panel continues to flash amber for a few seconds.

- Press "Pairing" button (9) on the FCP upgrade kit for about 0.5 to 1 second.

→ Radio link intensity" status indicator (7) on the FCP upgrade kit flashes amber for approx. 2 to 8 s until pairing has been completed.

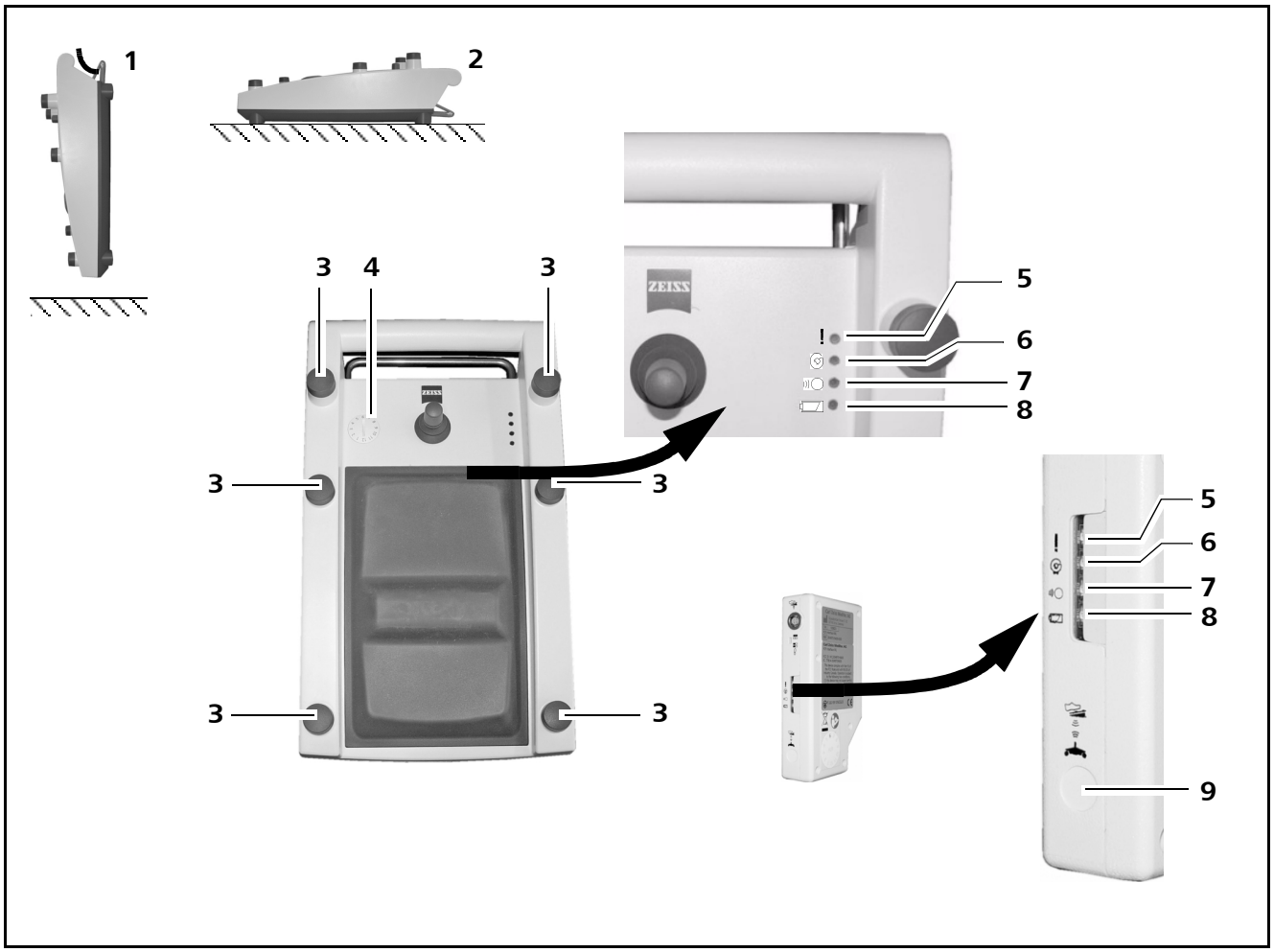
1
2
3
4
3
3
3
3
3
5
6
7
8
5
6
7
8
9

Successful pairing

→ A single beep indicates that pairing has been successfully completed.

→ "Radio link intensity" status indicator (7) on the foot control panel shines green for about 1 second.

→ "Ready for use" status indicator (5) on the FCP upgrade kit shines green.

→ The status indicators for "radio link intensity" (7) und "batteries" (8) on the FCP upgrade kit shine green after a delay of 1 to 8 s.

- Bring the foot control panel into a horizontal position (2).

→ The foot control panel activates the radio link. "Radio link intensity" status indicator (7) on the foot control panel then starts flashing.

You can also check whether pairing was successful by simultaneously pressing two buttons on the foot control panel. The "Radio link intensity" status indicator (7) will be lit.

Pairing failed

→ A triple beep indicates that pairing has not been successfully completed.

→ "Radio link intensity" status indicator (7) on the foot control panel shines red for about 1 second.

- Repeat the pairing process as described above.

On OPMI Pentero, you have to switch the suspension system off and back on again before repeating the pairing process.

CAUTION

Risk of confusion when using multiple foot control panels

The use of several foot control panels may lead to confusion and, as a result, to malfunction.

- After pairing, mark the associated FCP upgrade kit with a number (stickers provided in the delivery package) (10) and set indicator (4) on the foot control panel to the number assigned to the FCP upgrade kit, see example in the illustration on the right.

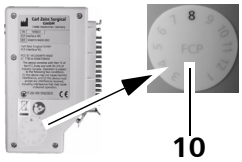

- Make sure that the assigned identification is unique in the entire surgery area.
- Check the function of the foot control panel on the basis of the checklist on Page 58.

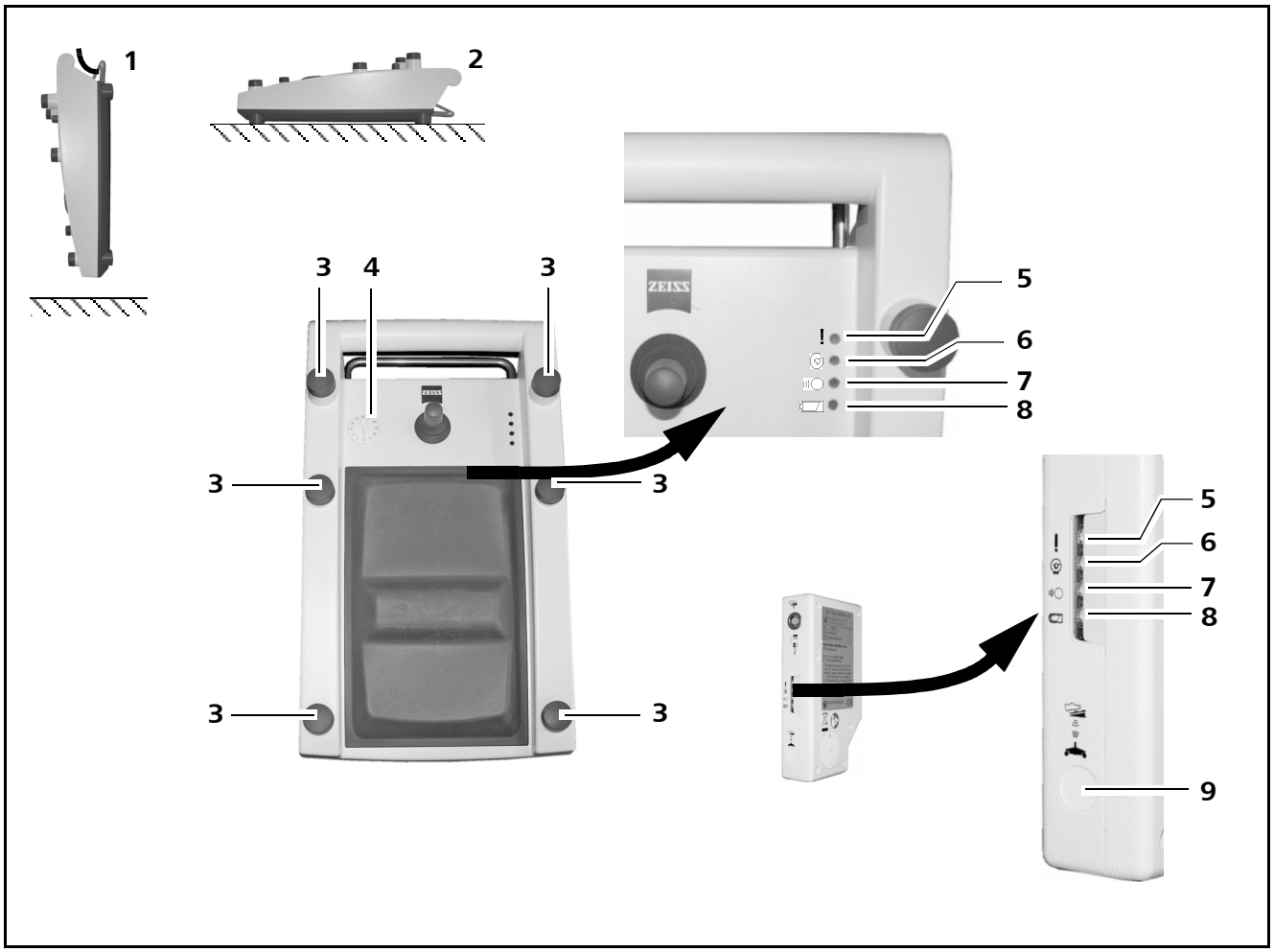
1
2
3
4
3
3
3
3
3
5
6
7
8
5
6
7
8
9

Connecting the connection cable

NOTE

Tripping hazard caused by loops of the connecting cable

- Check the routing of the connecting cable (if provided).
- Remove any loops and route the connecting cable so as to avoid any tripping hazards.

NOTE

Operation of microwave ablation devices

Do not use any microwave ablation devices in the frequency range between 2400 ... 2480 MHz. They interfere with the wireless mode of the foot control panel.

- Only operate the foot control panel in the wired mode with a connecting cable.

NOTE

Use of WLAN devices

WLAN devices may interfere with the wireless mode of the foot control panel.

- Operate WLAN devices at a minimum distance of one meter from the foot control panel.

– The connecting cable is needed for wired operation of the foot control panel.
– Pairing is not required for the wired mode.

Only use

– cable 304970-8730-000 with a 3 m length or
– cable 304970-8735-000 with a 3 m length and angled connector for S7 suspension systems or
– cable 304970-8760-000 with a 6 m length

- Insert 6-pin connector (1) in socket on the foot control panel.

- Insert 4-pin connector (2) (straight or angled) in socket (4) on the FCP upgrade kit.

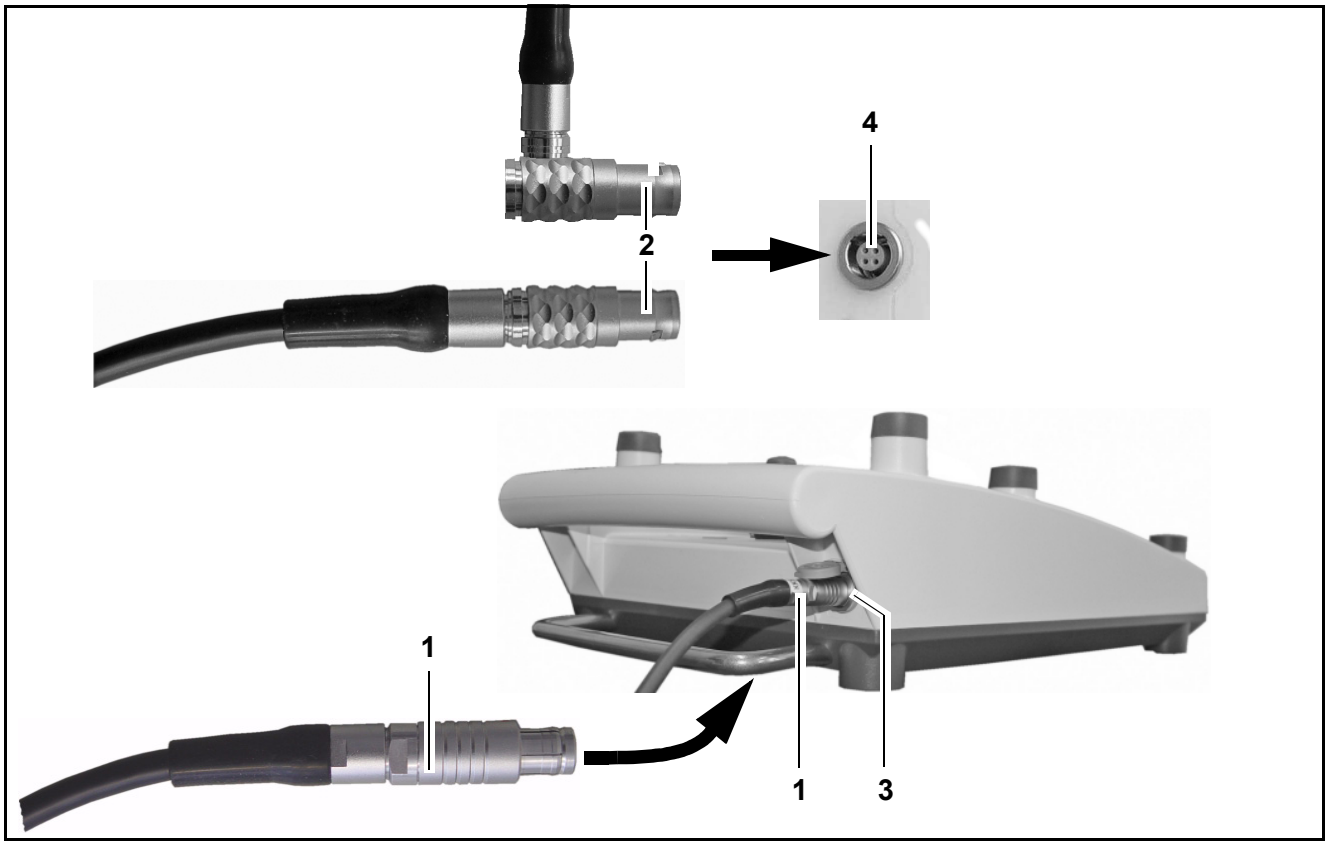

Exchanging the joystick head

The delivery package of the foot control panel includes an extension for the joystick and a joystick knob. You can use these items to suit your personal work style.

- Remove joystick extension (1) by pulling it upward. The extension may be hard to remove. Pull firmly if this is the case.
- Push joystick knob (2) into position as far as it will go.

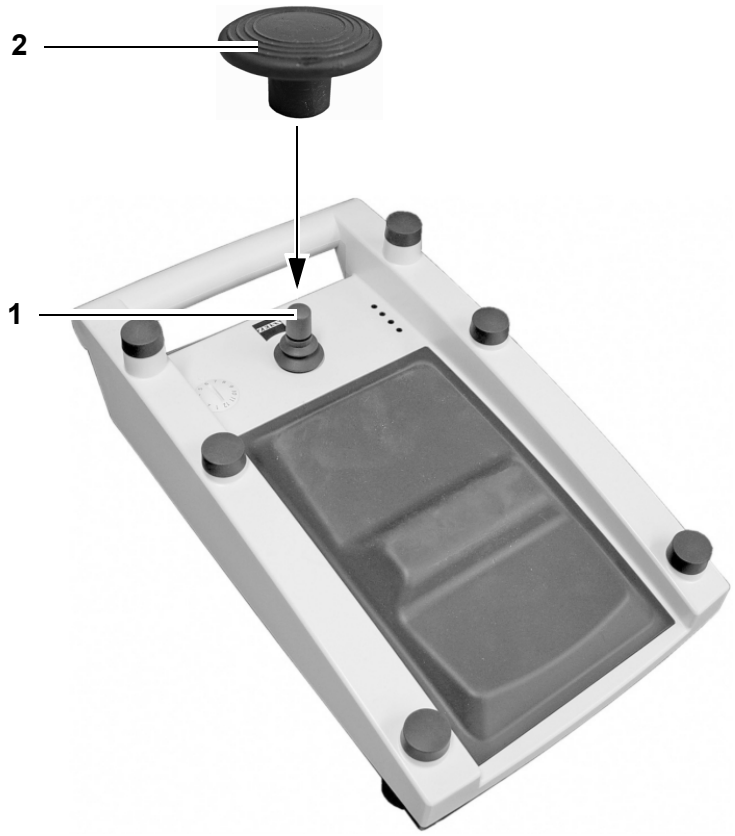

Bringing the foot control panel into its working position

NOTE

Use of WLAN devices

WLAN devices may interfere with the wireless mode of the foot control panel.

- Operate WLAN devices at a minimum distance of one meter from the foot control panel.

- Bring the foot control panel in its working position (1) by placing it horizontally on the floor.
  - Working position: 0° ... 10°
  - Rest position: 45 ° ... 90°
- If the foot control panel has not been used for some time, activate it by briefly pressing one of the buttons.

- The foot control panel is in its rest position (2) when it is hung up on the suspension system.
- The foot control panel is completely disabled in its rest position. The energy management function switches to mode 4 or 5, see Page 61, to save energy.
- The foot control panel performs a self-test when it is moved into the working position after some time in the rest position. All status indicators flash briefly during this test.
- The status indicators "radio link intensity" (4) and "batteries" (5) do not flash if no radio link exists in the wireless mode.

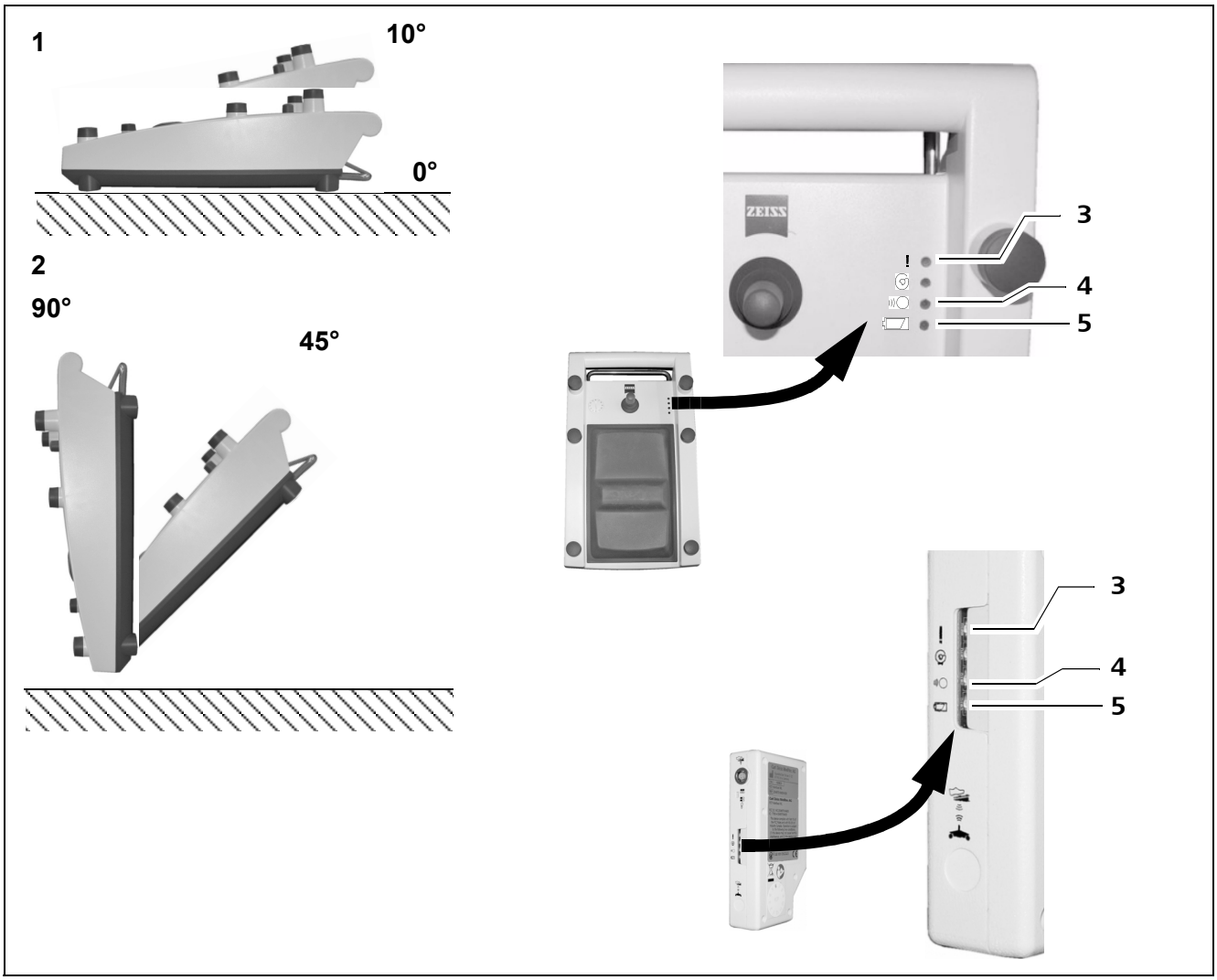
1
10°
0°
2
90°
45°
ZEISS
3
4
5
3
4
5

Adapter plate for operating chair

For improved ergonomics, ZEISS offers an adapter plate for the operating chair. Installation is done by ZEISS Service.

1 Operating chair 304731-9901-000

2 Adapter plate 000000-1117-104

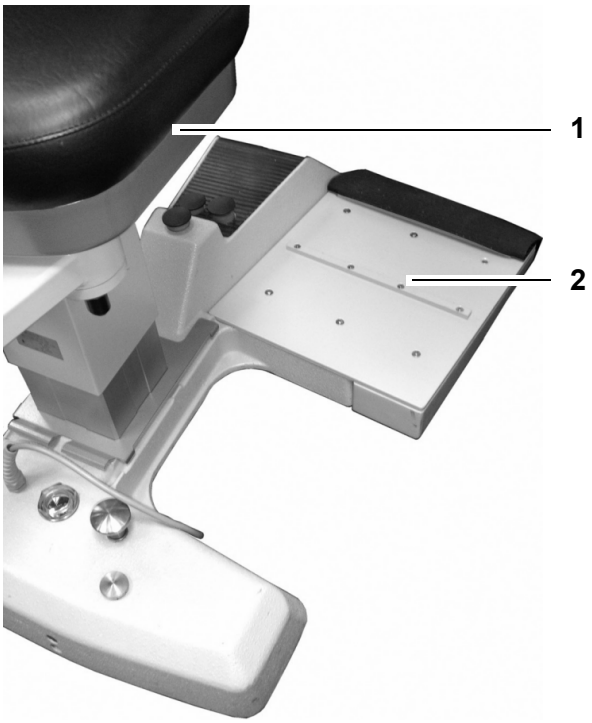

Operation

Checklist for wireless foot control panel **58**

Checklist for wired foot control panel **60**

Operating modes of the foot control panel **61**

Removing the connecting cable **62**

Resting position of the foot control panel **63**

Checklist for wireless foot control panel

- Always check the function of the foot control panel before surgery (without patient!) using the following checklist:

CAUTION

Failure of functions!

If a function fails, do not use the foot control panel for safety reasons!

- If possible, correct the malfunction (see "What to do in the event of malfunctions") or contact the Zeiss service department.

CAUTION

Unintended operation of the foot control panel!

A vertically adjustable operating table may accidentally activate buttons on the foot control panel.

- Therefore, make sure during installation and use that any unintended activation of controls is not possible.

NOTE

Replacement of the foot control panel

If you replace the foot control panel by another one that has not been paired with the suspension system, no function will be available.

- Pair the foot control panel with the suspension system, see Page 46.

NOTE

Use of drapes

The use of a drape on the foot control panel reduces its friction on the floor, thus impairing slip resistance.

Prerequisites

✓ The foot control panel is in its working position.

✓ The FCP upgrade kit has been connected.

✓ The batteries have been inserted with correct polarity.

✓ The suspension system has been powered on.

✓ The foot control panel has been paired with the FCP upgrade kit.

✓ The number in the indicator of the foot control panel is identical to that on the suspension system.

✓ The freely programmable buttons have been configured.

- Activate the foot control panel by activating any of the buttons.
- Check all functions of the foot control panel.

→ The suspension system and surgical microscope must respond correctly when controlled via the foot control panel.

Checklist for wired foot control panel

- Always check the function of the foot control panel before surgery (without patient!) using the following checklist:

CAUTION

Failure of functions!

If a function fails, do not use the foot control panel for safety reasons!

- If possible, correct the malfunction (see "What to do in the event of malfunctions") or contact the Zeiss service department.

CAUTION

Unintended operation of the foot control panel!

A vertically adjustable operating table may accidentally activate buttons on the foot control panel.

- Therefore, make sure during installation and use that any unintended activation of controls is not possible.

NOTE

Use of drapes

The use of a drape on the foot control panel reduces its friction on the floor, thus impairing slip resistance.

Prerequisites

✓ The suspension system has been powered on.

✓ The FCP upgrade kit has been connected.

✓ The connecting cable is undamaged and ready for operation.

✓ The connecting cable has been connected to the FCP upgrade kit.

✓ The freely programmable buttons have been configured.

- Check all functions of the foot control panel.

→ The suspension system and surgical microscope must respond correctly when controlled via the foot control panel.

Operating modes of the foot control panel

The foot control panel features an energy management function to ensure a maximum service life of the batteries in the wireless mode. Several operating modes support this function. The selection of the relevant operating modes is performed automatically. There is no need for you to take any action.

The table below shows you the different operating modes and their properties.

Operating mode	Activation	Duration	Response time and behavior
1	By bringing the foot control panel from rest to working position or by pressing a button	10 s	Command is executed with a max. delay of 100 ms. Setting up the radio link usually takes about 5 s, but may take up to 15 s in some cases.
2	Automatically via the foot control panel's energy management	20 s	Command is executed with a max. delay of 250 ms.
3		2 h	Command is executed with a max. delay of 500 ms.
4		30 min	Activation is delayed by approx. 3 s after a button is pressed. No function is executed. Foot control panel changes to mode 1.
5		--*	Activation is delayed by approx. 5 s after a bitton is pressed. The status indicators flash briefly. No function is executed. Foot control panel changes to mode 1.

* Until the foot control panel is brought from the resting to the working position or until a button is pressed.

Removing the connecting cable

- The FCP retrofit kit must remain on the suspension system while the foot control panel is being used.
- The FCP upgrade kit must be installed before the suspension system is powered on; otherwise, the suspension system will not detect the FCP upgrade kit.

- Disconnect 4-pin connector (1) (straight or angled) from socket (2) of the FCP upgrade kit.

→ The foot control panel is disabled.

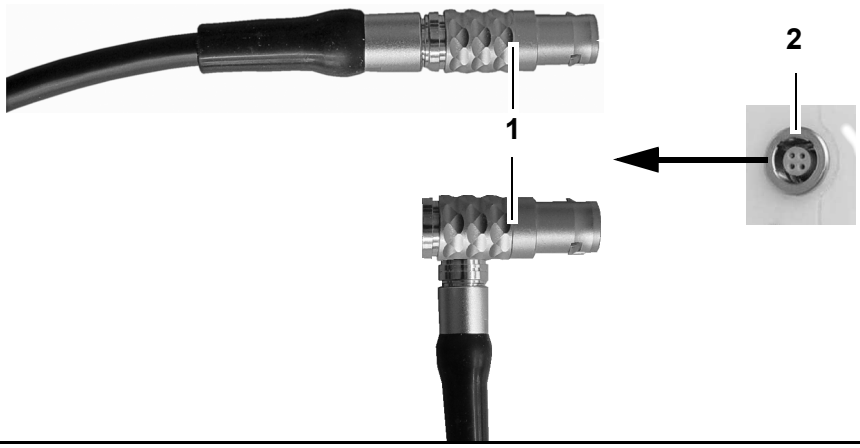

Resting position of the foot control panel

- Put the foot control panel in its resting position by attaching its bracket (1) e.g. to floor stand (2).

→ The foot control panel automatically shuts down in the resting position to save energy.

The energy-saving resting position extends the service life of the batteries in the wireless version of the foot control panel.

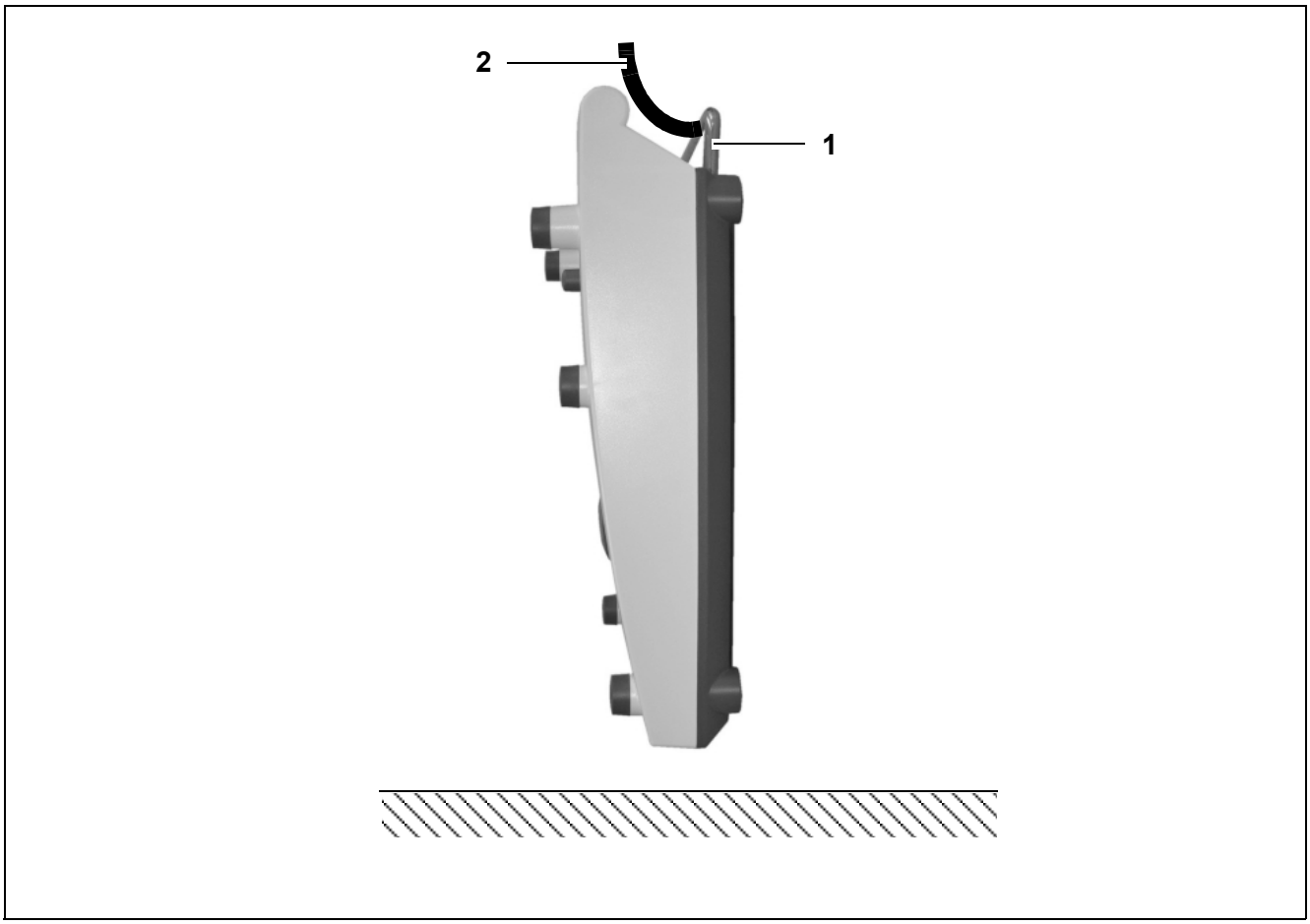

What to do in the event of malfunctions

What to do when the wireless foot control panel fails 66

Troubleshooting in the wireless foot control panel 68

For your safety 68

Malfunction of the foot control panel 68

Troubleshooting in the wired foot control panel 70

For your safety 70

Malfunction of the foot control panel 70

What to do when the wireless foot control panel fails

NOTE:

Connection cable

ZEISS recommends keeping the connection cable for the FCP WL at hand.

If the suspension system or the surgical microscope does not respond to the actuation of a switch on the foot control panel, take the following steps first:

- Insert the 6-pin connector (1) of the connecting cable (if provided) in socket (3) on the foot control panel.
- Insert the 4-pin connector (2) (straight or angled) of the connecting cable (if provided) in socket (4) on the FCP upgrade kit.

→ The foot control panel is now operating in wired mode.

- Look for and eliminate the cause of the malfunction after use, also see Page 68 ff.

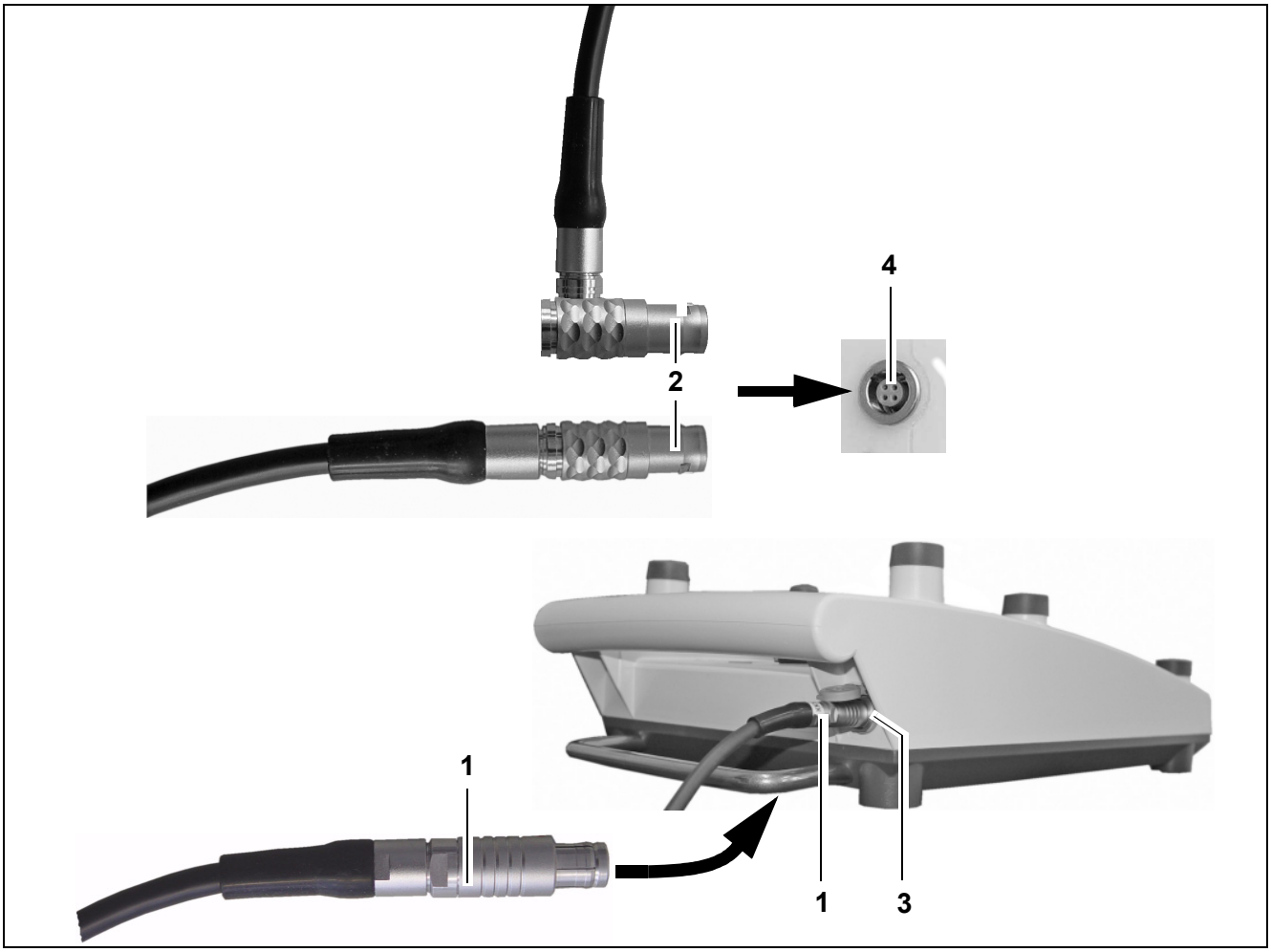
4
2
1
1
3

Troubleshooting in the wireless foot control panel

For your safety

This device is a high-grade technological product. To ensure optimum performance and safe working order, we recommend having it checked by our service representative as part of regular scheduled maintenance.

- If a failure occurs which you cannot correct with the aid of the chapter "What to do in the event of malfunctions", attach a sign to the device stating it is out of order and contact our service representative.

Malfunction of the foot control panel

The status indicators and acoustic notification signals help you diagnose malfunctions, see Page 26 f.

Problem	Possible cause	Remedy	See
Temporary failure of function	Batteries are depleted.	Replace batteries.	Page 44
	Use of rechargeable batteries	Replace batteries.	Page 44
	Failure of individual button functions	Contact service dept.	--
	Failure / malfunction of radio link in wireless foot control panel	Connect the connecting cable, if provided.	Page 50
	Position switch always detects rest position	Connect the connecting cable, if provided.	Page 50
	Interference in radio link	Connect the connecting cable, if provided.	Page 50
	Weak radio signal	Connect the connecting cable, if provided.	Page 50
	No pairing with FCP upgrade kit	Perform pairing with the FCP upgrade kit.	Page 46

Problem	Possible cause	Remedy	See
Unintended activation of function	Button got jammed after activation	Put foot control panel in its rest position.	Page 13
		Contact service dept.	--
	Foot control panel sends incorrect activation signal	Put foot control panel in its rest position.	Page 13
		Remove FCP upgrade kit from suspension system.	--
	Wrong foot control panel	Check whether identifications on suspension system and in indicator of foot control panel are identical.	--
		Perform pairing with the FCP upgrade kit.	Page 46

Troubleshooting in the wired foot control panel

For your safety

This device is a high-grade technological product. To ensure optimum performance and safe working order, we recommend having it checked by our service representative as part of regular scheduled maintenance.

- If a failure occurs which you cannot correct with the aid of the chapter "What to do in the event of malfunctions", attach a sign to the device stating it is out of order and contact our service representative.

Malfunction of the foot control panel

The status indicators and acoustic notification signals help you diagnose malfunctions, see Page 26 f.

Problem	Possible cause	Remedy	See
Foot control panel is inoperative	Connecting cable not connected to FCP upgrade kit	Plug in the connecting cable.	Page 50
Temporary failure of function	Failure of individual button functions	Contact service dept.	--
Unintended activation of function	Button got jammed after activation	Disconnect cable from FCP upgrade kit.	Page 50
		Contact service dept.	--
	Foot control panel sends incorrect activation signal	Remove FCP upgrade kit from suspension system.	--
		Disconnect cable from FCP upgrade kit.	--

Care and maintenance

Care of the device **72**
Cleaning 72
Disinfection 72

Environmental protection measures **73**
Note on disposal 73

Care of the device

Cleaning

Contamination of the foot control panel

- If possible, clean the foot control panel and its components directly after use.
- Contamination should not be allowed to dry on the objects, as this would make cleaning and disinfecting more difficult.

Cleaning mechanical surfaces

All mechanical surfaces of the foot control panel and its components can be cleaned by wiping them with a damp cloth. Do not use any aggressive or abrasive cleaning agents.

Clean off any residue using a mixture of 50% ethyl alcohol and 50% distilled water plus a dash of household dishwashing liquid.

Disinfection

It may be necessary to disinfect the surfaces.

NOTE

Damage to the surfaces on the instrument!

- Use a disinfectant based on aldehyde and/or alcohol. The addition of quaternary compounds is acceptable. To prevent damaging surfaces, disinfecting agents other than those listed below must not be used.

The maximum concentrations are:

- For alcohol (tested with 2-propanol): 60%
- For aldehyde (tested with glutaraldehyde): 2%
- For quaternary compounds (tested with DDAC): 0.2%

Environmental protection measures

Note on disposal

User information
on the disposal of electrical and electronic devices

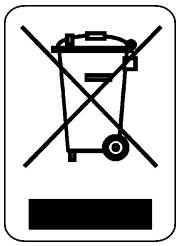

This symbol means that the product must not be disposed of as normal domestic waste.
The correct disposal of electrical or electronic devices helps to protect the environment and to prevent potential hazards to the environment and/or human health which may occur as a result of improper handling of the devices concerned.
For detailed information on the disposal of the product, please contact your local dealer or the device manufacturer or its legal successor. Please also note the manufacturer's current information on the Internet. In the event of resale of the product or its components, the seller is required to inform the buyer that the product must be disposed of in accordance with the applicable national regulations currently in force.

For customers in the European Union

Please contact your dealer or supplier if you wish to dispose of electrical or electronic devices.

Information on disposal in countries outside the European Union

This symbol is only applicable in the European Union. For the disposal of electrical and electronic devices, please observe the relevant national legislation and other regulations applicable in your country.

Disposal of batteries

Please observe the local directives relating to the disposal of batteries, or contact your local sales organization for further information.

The batteries must not be disposed of as normal domestic waste. Use an appropriate facility for the disposal of batteries.

System data

Technical data 76
Mechanical data 76
Electrical data 76

EMC guidelines 78
Electromagnetic radiation disturbance 79
Electromagnetic immunity for ME equipment and ME systems 80
Electromagnetic immunity for non-life-supporting ME equipment and ME systems 82
Recommended safety distances 84

Ordering data 85

Approval verification 86

Ambient conditions 87

Technical data

Mechanical data

Component	Feature
Dimensions of foot control panel L x W x H	approx. 410 x 243 x 128 mm
Dimensions of FCP upgrade kit L x W x H	approx. 145 x 100 x 30 mm
Weight of foot control panel without batteries	approx. 2.8 kg
Weight of FCP upgrade kit	approx. 243 g

Electrical data

Electrical data, wireless operation

Component	Feature
Power supply	3 x C type 1.5 V alkaline-manganese batteries
Current consumption	max. 100 mA
Service life of batteries	approx. 2 to 6 months - depending on the operating duration of the foot control panel
Electrical standard	Complying with IEC 60601-1; UL 60601-1 Degree of protection IPX8
Cable connection	Remote socket for connecting cable
The device has been designed for continuous operation.	

Electrical data, wired operation

Component	Feature
Power supply	15 VDC ± 10 % via the suspension system
Current consumption	max. 200 mA
Electrical standard	Complying with IEC 60601-1; UL 60601-1 Degree of protection IPX8
Cable connection	Remote socket for connecting cable
The device has been designed for continuous operation.	

Radio module

Component	Feature
Transmission frequency	2402 ... 2480 MHz
Receiving power	-82 .... 0 dbm
Transmission power	0 dbm - max. 2.5 mW - Class 2
	To be used only in combination with the suspension systems specified on Page 36

EMC guidelines

The device is subject to specific precautions with regard to electromagnetic compatibility (EMC). In order to avoid the occurrence of EMC interference, the device may only be installed, operated and maintained in the manner indicated in these Instructions for Use and only with components supplied by ZEISS.

CAUTION

Danger from electromagnetic radiation

Electrical devices can influence each other as a result of their electromagnetic radiation. The use of non-approved components (accessories, transformers of all types, cables) can cause increased emissions or reduce the device's immunity.

- With the exception of the combination of the devices described in these Instructions for Use, do not operate the device in direct proximity to other devices.
- Only use accessories, transformers, cables and spare parts which are specified in these Instructions for Use or which are approved by ZEISS for this device.
- Do not use any portable or mobile RF communication equipment near the device as it is not possible to exclude the possibility that the function of the device will be affected.
- Please follow the EMC guidelines in the following pages.

Electromagnetic radiation disturbance

Guidelines and manufacturer's declaration - electromagnetic radiation disturbance - for all ME (medical electrical) equipment and ME systems

Guidelines and manufacturer's declaration - electromagnetic radiation disturbance

The foot control panel is intended as an accessory for a surgical microscope and suspension system for operation in an electromagnetic environment as specified below. The customer or the user of the foot control panel is responsible for ensuring that the device is operated in such an environment.

Radiation disturbance measurements	Compliance	Electromagnetic environment - guidelines
RF emissions as per CISPR 11	Group 1	The foot control panel as an accessory for a surgical microscope and suspension system uses RF energy only for its internal functions. As a result, RF emissions are very low and unlikely to cause any interference in nearby electronic devices.
RF emissions as per CISPR 11	Class B	The foot control panel as an accessory for a surgical microscope and suspension system is suitable for use in all facilities including locations in residential environments and those directly connected to the public power supply network which also supplies buildings used for residential purposes.
Harmonic emissions as per IEC 61000-3-2	Class A	
Voltage fluctuations and flicker as per IEC 61000-3-3	Compliant	

Electromagnetic immunity for ME equipment and ME systems

Guidelines and manufacturer's declaration - electromagnetic immunity for ME equipment and ME systems

Guidelines and manufacturer's declaration - electromagnetic immunity

The foot control panel is intended as an accessory for a surgical microscope and suspension system for operation in an electromagnetic environment as specified below. The customer or the user of the foot control panel is responsible for ensuring that the device is operated in such an environment.

Immunity tests	Test level as per IEC 60601-1-2	Compliance level	Electromagnetic environment - guidelines
Electrostatic discharge (ESD) as per IEC 61000-4-2	± 6 kV contact discharge ± 8 kV air discharge	± 6 kV contact discharge ± 8 kV air discharge	Floors should be made of wood or concrete or be covered with ceramic tiles. If the flooring contains synthetic materials, the relative humidity must be 30% minimum.
Fast transient/burst immunity as per IEC 61000-4-4	± 2 kV for power supply lines ± 1 kV for input/output lines	For the key performance features: ± 2 kV for power supply lines ± 1 kV for input/output lines Reduced compliance level for video signals, i.e. fast transients/bursts on the power supply line or on signal and video lines may cause disturbances in the video image.	The quality of the supply voltage should be that of a typical business or hospital environment.
Surges as per IEC 61000-4-5	± 1 kV voltage line to line ± 2 kV voltage line to ground	± 1 kV voltage line to line ± 2 kV voltage line to ground	The quality of the supply voltage should be that of a typical business or hospital environment.

Guidelines and manufacturer's declaration - electromagnetic immunity			
Voltage dips, short interruptions and voltage variations as per IEC 61000-4-11	< 5% U_T (> 95% dip of U_T) for 10 ms 70% U_T (30% dip of U_T) for 500 ms < 5% U_T (>95% dip of U_T) for 5 s	The test level achieved in the test corre-sponds to active med-ical devices not equipped with an inte-grated power source (battery, UPS...).	The quality of the supply voltage should be that of a typical business or hospital environment.
Power frequency (50/60 Hz) magnetic field as per IEC 61000-4-8	3 A/m	30 A/m	Power frequency magnetic fields should be at levels typical of business and hospital environments.

NOTE: U_T is the AC supply voltage prior to application of the test level.

Electromagnetic immunity for non-life-supporting ME equipment and ME systems

Guidelines and manufacturer's declaration - electromagnetic immunity - for non-life-supporting ME equipment and ME systems

Guidelines and manufacturer's declaration - electromagnetic immunity

The foot control panel is intended as an accessory for a surgical microscope and suspension system for operation in an electromagnetic environment as specified below. The customer or the user of the foot control panel is responsible for ensuring that the device is operated in such an environment.

Immunity tests	Test levels according to IEC 60601-1-2	Compliance level	Electromagnetic environment - Guidance
			Portable and mobile radio communication equipment should not be used at a shorter distance from the foot control panel, including cables, than the recommended separation distance that is calculated using the equation applicable to the transmission frequency involved.
Conducted RF disturbances as per EN 61000-4-6	3 $V_{effective\ value}$ 150 kHz to 80 MHz	3V	$d = \left[\frac{3,5}{U_1}\right]\sqrt{P}$
Radiated RF disturbances as per EN 61000-4-3	3 V/m 80 MHz to 2.5 GHz	3 V/m	$d = \left[\frac{3,5}{E_1}\right]\sqrt{P}$ for 80 MHz to 800 MHz $d = \left[\frac{7}{E_1}\right]\sqrt{P}$ for 800 MHz to 2.5 GHz where P is the output power rating of the transmitter in watts (W) according to the transmitter manufacturer's specifications and d is the recommended safety distance in meters (m). The field strength of stationary radio transmitters for all frequencies according to an on-site investigation[a] should be lower than the compliance level [b]. Interference may occur in the vicinity of equipment marked with the following symbol.

Guidelines and manufacturer's declaration - electromagnetic immunity

NOTE 1: At 80 MHz and 800 MHz, the higher frequency range applies.

NOTE 2: These guidelines may not apply in all situations. Electromagnetic propagation is influenced by absorption and reflection by structures, objects and persons.

[a] Theoretically, field strengths of stationary transmitters such as base stations for mobile telephones and mobile land radio equipment, amateur radio stations, AM and FM radio broadcast and TV broadcast transmitters cannot be predicted accurately. To assess the electromagnetic environment with respect to stationary RF transmitters, a site study of the electromagnetic phenomena should be considered. If the measured field strength in the location where the foot control panel is used as an accessory for a surgical microscope and suspension system exceeds the compliance levels indicated above, the foot control panel as an accessory to a surgical microscope and suspension system should be monitored to verify normal operation. If abnormal performance is observed, additional measures may be necessary, such as reorienting or relocating the foot control panel.

[b] Over the range of frequencies from 150 kHz to 80 MHz, the field strengths should be lower than 3 V/m.

Recommended safety distances

Table 6: Recommended safety distances between portable and mobile RF communication equipment and the ME device or ME system - for non-life-supporting ME equipment or ME systems

Recommended safety distances between portable and mobile RF telecommunication equipment and the [ME device or ME system]

The foot control panel is intended as an accessory for a surgical microscope and suspension system for operation in an electromagnetic environment in which RF disturbances are controlled. The customer or the user of the foot control panel can help prevent electromagnetic interference by maintaining a minimum distance between portable and mobile RF communication equipment (transmitters) and the foot control panel, depending on the output power of the communication equipment as specified below.

Nominal output of the transmitter [W]	Safety distance depending on transmission frequency [m]		
	150 kHz to 80 MHz	80 MHz to 800 MHz	800 MHz to 2.5 GHz
	$d = \left[\frac{3,5}{U_1}\right]\sqrt{P}$	$d = \left[\frac{3,5}{E_1}\right]\sqrt{P}$	$d = \left[\frac{7}{E_1}\right]\sqrt{P}$
0.01	0.12	0.12	0.23
0.1	0.38	0.38	0.73
1	1.2	1.2	2.3
10	3.8	3.8	7.3
100	12	12	23

For transmitters rated at a maximum output power not listed above, the recommended safety distance d in meters (m) can be determined using the equation indicated for each column, with P being the maximum output power rating of the transmitter in watts (W) according to the transmitter manufacturer's specifications.

NOTE 1: At 80 MHz and 800 MHz, the higher frequency range applies.

NOTE 2: These guidelines may not apply in all situations. Electromagnetic propagation is influenced by absorption and reflection by structures, objects and persons.

Ordering data

14-function foot control panel - wired and wireless

Description	Cat. No.
14-function foot control panel, wired (FCP)	304970-9100-000
14-function foot control panel, wireless (FCP WL)	304970-9200-000
Joystick knob	304970-8807-000
Joystick extension	304970-8808-000
3 m connecting cable for 14-function foot control panel (FCP & FCP WL)	304970-8730-000
3 m connecting cable for 14-function foot control panel (FCP & FCP WL) (angle plug for S7 suspension systems)	304970-8735-000
6 m connecting cable for 14-function foot control panel (FCP & FCP WL)	304970-8760-000
Upgrade kit for 14-function foot control panel, wired (FCP)	304970-9055-000
Upgrade kit for 14-function foot control panel, wireless (FCP WL)	304970-9060-000
Adapter plate for OR chair	000000-1117-104

Approval verification

Description	Labeling
Radio frequency approvals	See also document G-30-2021 (Radio Approval Information). The radio frequency approvals apply only to the wireless version of the foot control panel.
EMC requirements	The foot control panel meets the EMC requirements in accordance with IEC 60601-1-2.
	The foot control panel meets the radiation emission criteria for limit class B.
Accessory for a medical device	The foot control panel meets the essential requirements stipulated in Annex I to the 93/42/EEC directive governing medical devices.
RoHS compliance	The product is RoHS compliant in accordance with Directive 2011/65/EU.

Ambient conditions

For operation

Feature	Admissible range
Temperature	+ 10 °C ... + 40 °C
Relative humidity	30% ... 75%
Maximum altitude	3000 m above MSL
Air pressure	700 hPa ... 1060 hPa

For transportation and storage

Feature	Admissible range
Temperature	- 40 °C ... + 70 °C
Rel. humidity (without condensation)	10% ... 90%
Air pressure	500 hPa ... 1060 hPa

Index

A

Acoustic notification signal 29
After every use 13
Approval verification 86

B

Batteries, depleted 68
Batteries, disposal 73
Batteries, inserting 44
Battery compartment 44
Battery type 44
Beep 29
Bracket 24

C

Checklist for wired foot control panel 60
Checklist for wireless foot control panel 58
Connecting cable 24
Connecting cable, not connected 70
Connecting cable, removal 62
Controls 24
Current consumption 76

E

Electrical standard 76
Electromagnetic compatibility 10
EMC requirements of IEC 60601-1-2 10

F

Failure of a function 58, 60
Failure of wireless foot control panel 66
FCP upgrade kit 36, 42
Field of application 8
Foot rest 24

H

Hazard symbols 6

I

Indicator 24, 48
Intended use 8

J

Joystick 24, 53

L

Longitudinal configuration 24, 30

M

Malfunction when using multiple foot control panels 48
Manufacturer 2
Microwave ablation 50
Multiple foot control panels, use of 48

N

Normal use 8
Notes on EMC 10
Notification signal 29

O

Operating modes 61

P

Pairing 46, 50
Power supply 76
Pressure compensation membrane of the FCP 35
Problem 68, 70

R

Radio frequency radiation in accordance with FCC regulations 10
Radio link 68
Radio signal 68
Rest position 13, 54, 63
Rocker switch 24

S

Safety 7
Safety standards 7

Service life of batteries 76
Status indicators 25, 26
Symbols and labels 14

T

Target group 8
Technical data 76
Transverse configuration 24, 32
Troubleshooting in wired foot control panel 70
Troubleshooting in wireless foot control panel 68

W

What to do when wireless foot control panel fails 66
Working position 54, 58

(Blank page, for your notes . . .)

Carl Zeiss Meditec AG
Goeschwitzer Strasse 51-52
07745 Jena
Germany

Fax: + 49 (0)7364 - 20 4823
E-mail: info.meditec@zeiss.com
Internet: www.zeiss.com/med