Bluetooth®

UA-28SE

Retractable Stereo Headset

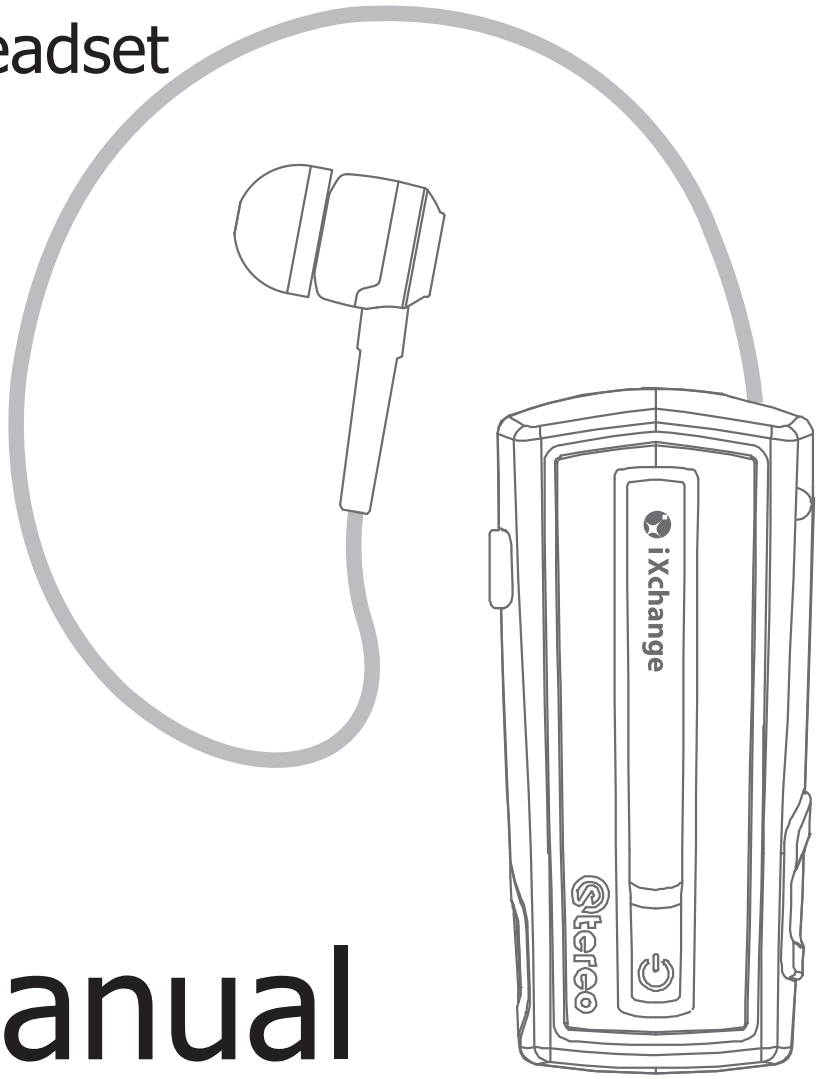

User Manual

Contents

Product Specifications 3
Components 4
UA-28SE Overview 5
Retractable Mechanism 6
How to Wear Your Headset 7-9
Charging Your Headset 10
Getting Started 11
Pairing Your Headset with a Bluetooth®
wireless technology enabled device 11
Pairing Your Headset with Two Bluetooth®
wireless technology enabled devices (Multi-point) 12
Reconnecting Your Headset 13
Using Your Headset 14-17
Listening the music 18-19
Troubleshooting 20-21
Safety Precautions 22
Maintenance 23
Declaration of Conformity 24
FCC Compliance Statement 24-25

Product Specifications

Bluetooth® Specification:	V4.0
Bluetooth® Profiles Supported:	HFP v1.6 wideband speech (HD voice ready), HSP v1.2, A2DP v1.2, AVRCP v1.4
Operating Distance:	10 meters with no obstructions
Operating Temperature:	0-50 degree celsius
Charging Time*:	Around 1.5 hours
Talk Time*:	Up to 7 hours
Music Time*:	Up to 6 hours
Standby Time*:	Up to 240 hours
Battery Type and Capacity:	Rechargeable Li-Polymer 100mAh
Dimension:	55(L) x 25.5(W) x 15(H) mm
Weight:	21g

*May be varied by mobile phone settings and operator

Components

Thank you for choosing the iXchange UA-28SE Retractable Stereo Bluetooth® Headset. We hope you enjoy it! Inside the package, you should find:

1 UA28SE headset
1 USB saver charger
1 USB Cable
1 Neck Strap
1 Earphone cable with the micro USB plug
1 Micro USB / 3.5mm female plug connector
1 Manual
1 Pouch
2 set L/S inear cushion

UA-28SE Overview

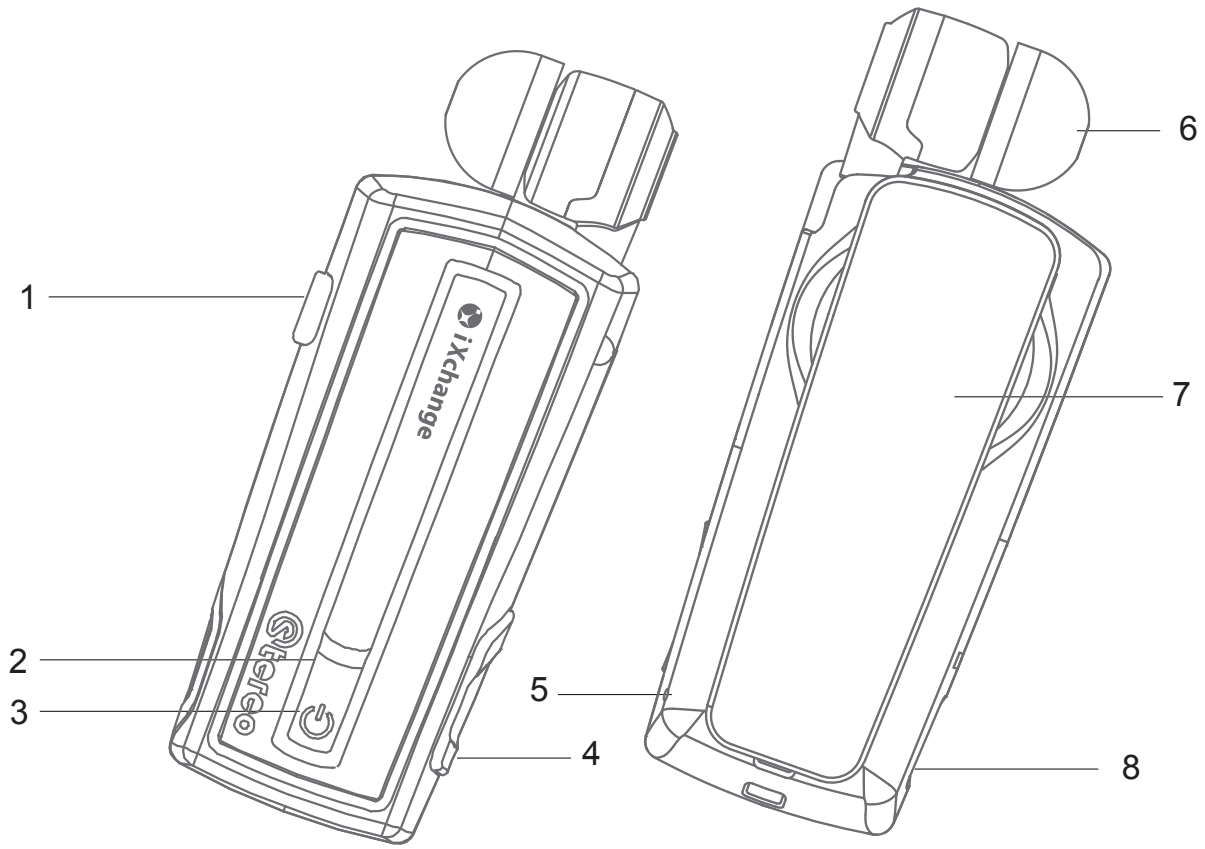

1. Rewind Button
2. Status Indicator
3. Multi-function Button (MFB)
4. Volume Button
5. Microphone
6. Earpiece
7. Clip
8. Micro USB Charging Socket
9. Neck Strap hole

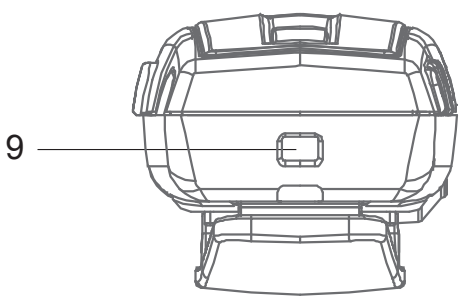

Retractable Mechanism

The earpiece cord can be extended by gently pulling on the cord. The cord can be retracted (shortened) by pressing the Rewind Button.

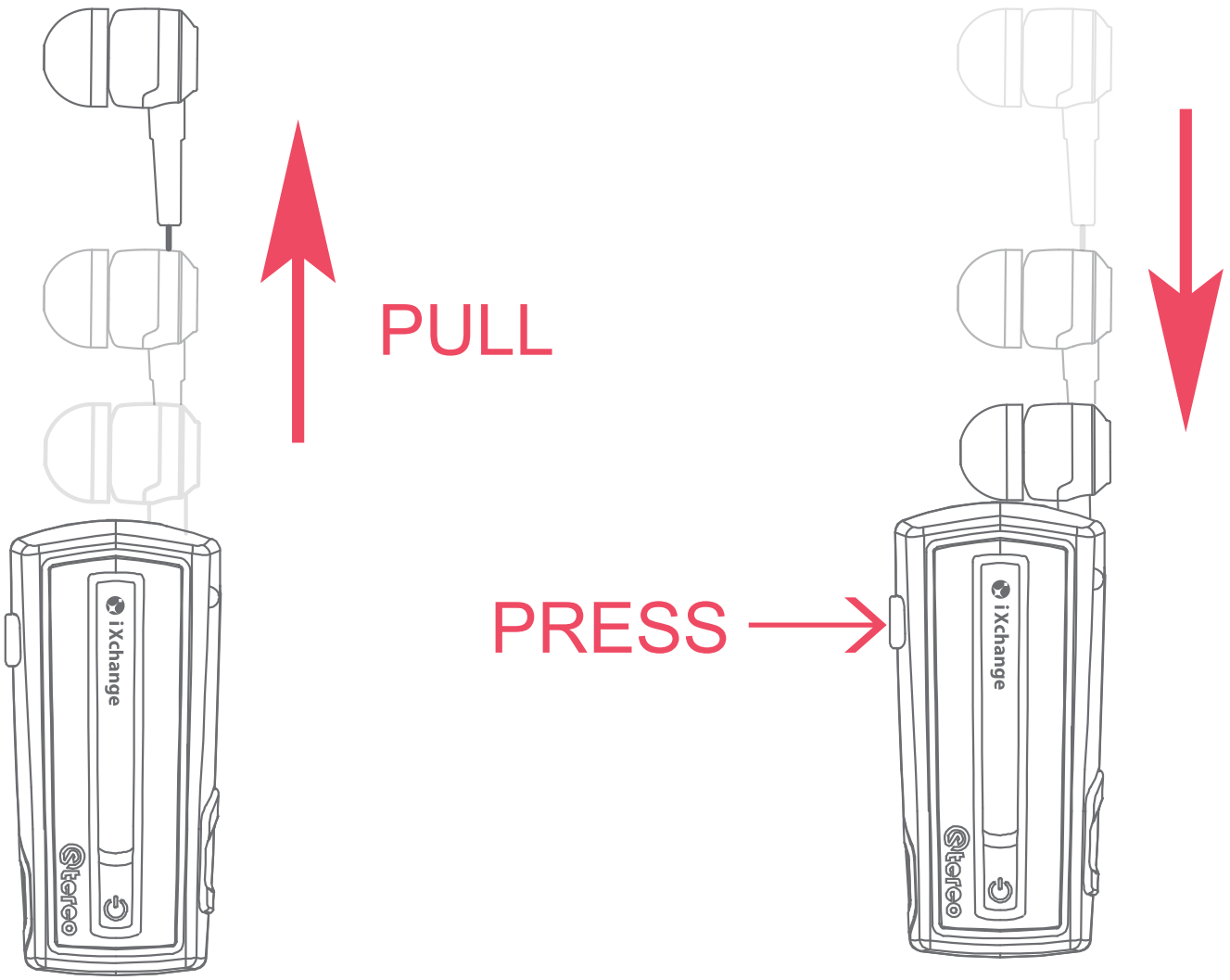

How to Wear Your Headset

UA-28SE is designed,

A. to clip onto your clothing, or

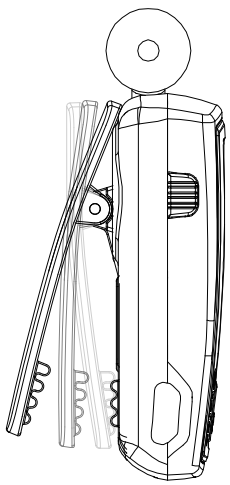

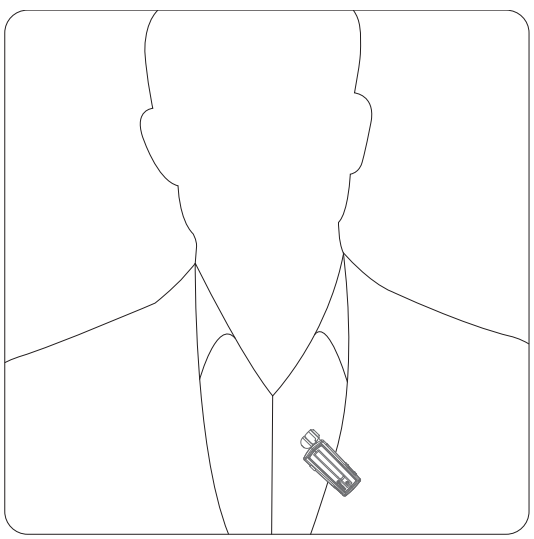

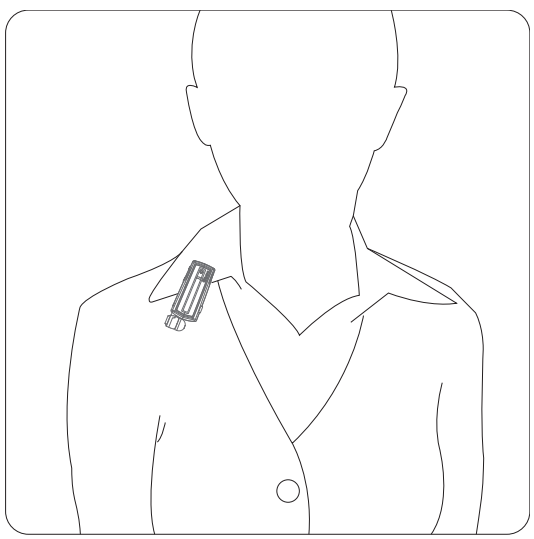

How to Wear Your Headset (cont'd)

B. fasten by a neck strap to wear comfortably and securely around your neck

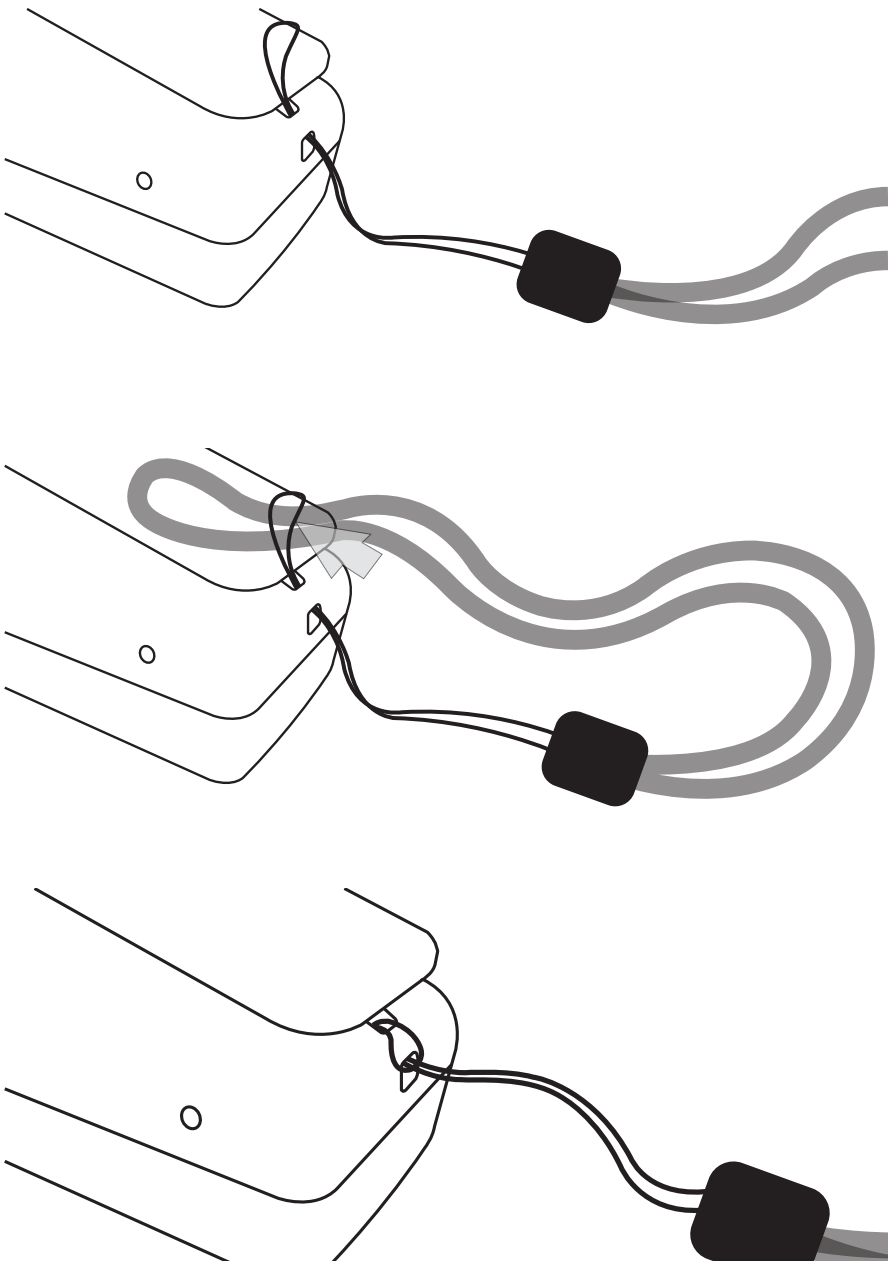

Step 1. Loop the thin end of the neck strap through the slot on the Headset.

Step 2. Loop the thicker side of the neck strap through the loop created by the thin wire and pull until snug.

Step 3. Once pulled through, you can wear your Headset around your neck.

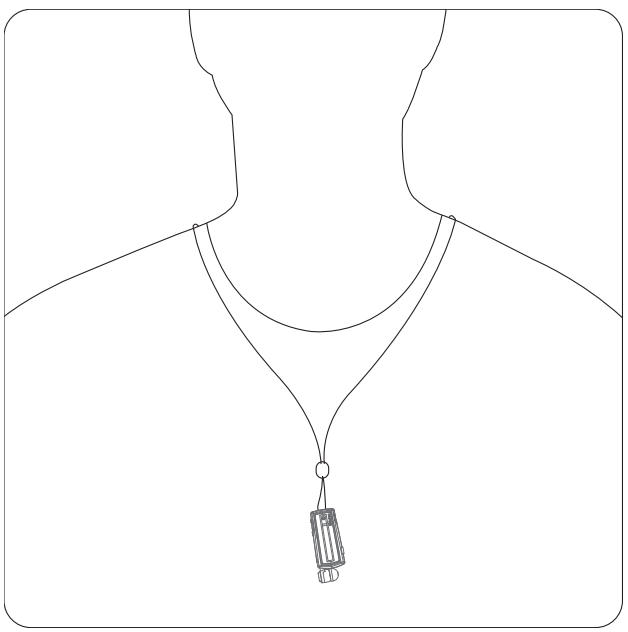

How to Wear Your Headset (cont'd)

B.

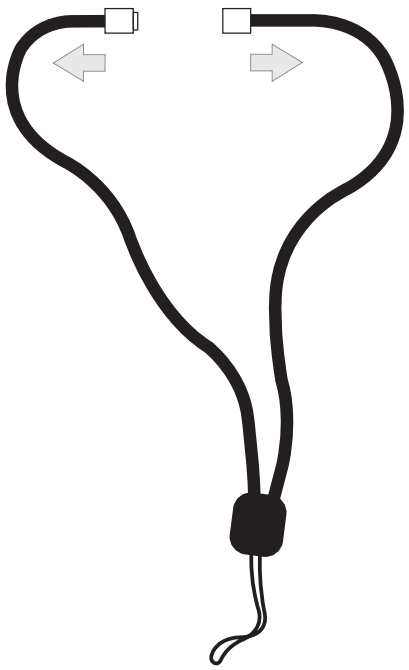

To release the strap, hold the strap and pull outwardly. (See the picture on left)

• Use the provided neck strap only.

• It may be necessary to bring the microphone closer to your mouth for lowering background noise.

Charging Your Headset

Before using your UA-28SE (”Headset”) for the first time, please plug the charger into the power source and connect the other end to micro USB charging socket of headset to charge the battery fully.

Status	**Status Indicator**	**Audio (Earpiece)**
1. Charging	Red light ON	No sound
2. Fully charged	Blue light ON	No sound
3. Low battery	Red light for every 5 seconds	A short beep every 20 seconds
4. Out of battery	OFF	No sound

• Use only the supplied charger for charging
• To extend the battery life, re-charging the battery every 6 months.
• Charging indication will be delayed in a few seconds if the headset has not been used for a long period of time.

Getting Started

Turning Your Headset On and Off:

A. Turning on
   Press and hold the MFB until the status indicator flashes blue.
B. Turning off
   Press and hold the MFB until the status indicator flashes red.

Pairing Your Headset with a Bluetooth® wireless technology enabled device

1. Turn on the Bluetooth® function in the device.
2. Place the headset and the device where they are visible, within arm's length from each other.
3. Ensure the headset is OFF.
4. To activate the device's pairing mode, press and hold the MFB until the status indicator flashes blue and red alternately.
5. Search the headset, select "UA-28SE" and enter the passcode "0000". If your device supports "Simple Pairing" function, no code is required.
6. When the pairing is complete, the headset's status indicator will flash blue.

Pairing Your Headset with Two Bluetooth® wireless technology enabled devices (Multi-point)

UA-28SE supports a Multi-point function to allow simultaneous pairing of the headset with two devices.

1. Pair the headset with the first device (follow the step in "Pairing Your Headset with a Bluetooth wireless technology enabled device").
2. Turn off the headset and the Bluetooth® function of the first paired device.
3. Pair the headset with the second device (follow the step in "Pairing Your Headset with a Bluetooth wireless technology enabled device").
4. Activate the Bluetooth connection with the headset and the first paired device on the device's menu.

• For some devices, you may need to manual press "connect" to connect the headset.
• If the pairing cannot be completed within two minutes, the headset will automatically go to standby mode and then turn off after five minutes. Repeat steps to pair both devices again.

Reconnecting Your Headset

1. If the headset has been powered off, it will reconnect to the phone automatically after switching on the headset, if not, press reconnect on the phone.

2. If the phone has been powered off and headset is then disconnected, the headset will reconnect automatically when phone turns on again. Otherwise, turns on the headset again.

Using Your Headset

Function	Button	Audio (Speaker)	Status Indicator
Incoming Call	--	Ringtone (Musice will stop durung incoming call)	Blue light flash 3 times in every 3 seconds
Answer a Call (Standby mode / music playing mode)	Press MFB once to accept	'Di Do' tone once	During the call, blue light flash in every 5 seconds
Answer a Second Call	1. Press MFB once to end the current call and accept the second Call 2. Press and hold Vol + once to hold the current call and accept the second Call	--	During the call, blue light flash in every 5 seconds
Call Reject	Press the MFB twice	'Di Do' tone once	Blue light flash once
• Reject a second call directly on the other connected phone during the call.			
End a Call	Press the MFB once	'Di Do' tone once	Blue light flash once
Mute / Unmute	During the call, press the Volume + twice / During the call, press the Volume - twice	'Di Do' tone once	--
Hold / Unhold	During the call, press and hold the Volume +	'Di Do' tone once	--

Using Your Headset (cont'd)

Function	Button	Audio (Speaker)	Status Indicator
Voice Dialing	Press and hold the MFB until a short beep	'Do' tone once	--
• After you hear a short beep, say the voice tag, and you must have the voice tag record on your mobile phone. • Voice redialing is only allowed for those saved voice tag into the 1st connected phone if you have connected two mobile phones.			
Last Number Redial (Standby mode / music playing mode)	Press the MFB twice	'Do' tone once	--
• Redial the call from the 1st connected phone if two mobile phones are connected.			
Reset / Remove the pairing history	Press and hold the MFB and Volume +	'Do Do' tone once	Red light flashes once
Out of range alert	--	'Di Do' tone	Blue light flashing 2 times for every 3 seconds
• The headset will automatically reconnect within 5 minutes, otherwise it will off. If auto-connect is not supported, press the MFB once.			

Using Your Headset (cont'd)

Function	Button	Audio (Speaker)	Status Indicator
Play a music	Press directly from phone	Music	Blue light keeps flashing when a call is transferred from headset
Adjust Volume	Press the Volume +/- once to increase/ decrease by 1 level (Total 8 levels)	--	--
Standby mode without mobile connection (No network covered)	--	--	Blue light flashing 2 times for every 3 seconds
Standby mode with mobile connection	--	--	Blue light flashing 1 time for every 10 seconds

Using Your Headset (cont'd)

- UA-28SE is designed to work with the mobile phones with Bluetooth Handsfree profiles (or Bluetooth devices), the compatibility of some features are not guaranteed for some phones in different operating system.

In order to have a better and clear reception, there should have no obstacle to the headset while talking.

Listening the music

Enjoy the music in two ways:

A. By a earphone cable (provided)
   Step 1: Connect the provided earphone cable to the micro USB socket
   Step 2: Enjoy the music with the earphone and the retractable earpiece

B. By your own headphone
   Step 1: Connect the provided micro USB / 3.5mm female plug connector to the micro USB socket
   Step 2: Enjoy the music with your own 3.5mm headphone

Note:
No sound from the retractable earpiece in this way, using the headset by your own headphone

Listening the music (cont'd)

Function	**Button**	**Audio (Speaker)**	**Status Indicator**
Play a music	Press directly from phone	Music	Blue light flashing 2 times for every 3 seconds
Stop playback	Press the MFB for 2 seconds	--	--
Select the song during playback	Press and hold the Vol + for 2 seconds	--	--

Troubleshooting

I cannot pair with my mobile phone
- Ensure your headset is power on and fully charged
- Ensure the Bluetooth setting is activated on your phone
- Ensure the headset is at pairing mode (flashes blue and red alternately)
- Ensure the headset is not out of range of your phone

If the above steps do not solve the problem, please turn off the headset and recharge the headset, and then try again.

I cannot hear the sound in my headset
- Ensure your headset is power on and fully charged
- Ensure your headset is paired and connected with your phone
- Ensure the conversation is not transferred to your phone
- Ensure the volume level is high enough

I cannot turn off the headset
Please press and hold the MFB for a longer time, otherwise, please recharge the headset for 2-3 seconds then disconnect the charger, the headset now turns off.

I cannot turn on the headset
Ensure your headset is power on and fully charged, otherwise, please charge the headset for 1-1.5 hours, and then turn on again.

Troubleshooting (cont'd)

My phone cannot be auto-reconnected with the headset
- Manually connect the headset from your mobile phone
- Turn off the mobile then turn on again
- Turn off the headset then turn on again

If the above steps do not solve the problem, turn off the headset and reset it, pairing the headset again.

I hear a "Beep" sound during the call, what happen?
Low battery alert, please charge your headset.

I hear some noise during the call, why?
There is an obstruction between the headset and your mobile, please remove it. Or please put your mobile on the table, don't hold it on hand.

Safety Precautions

1. Unintentional depression of the retractable button could result in an injury from the force of the earpiece cord retraction.
2. Be careful when retracting the length of the earphone. Keep a safe distance between your face and the headset.
3. If you must use the headset while driving, ensure your attention is fully focused on driving safety. Be a responsible driver and abide by the local laws.
4. Place in a children's unreachable area, never allows them to play with the headset. Small parts pose as a choking hazard.
5. Obey all designated areas such as hospitals, electronically restrictive and hazardous environment that require an electrical device be switched off.
6. Turn off your headset prior to boarding on an aircraft. Do not use it while being asked by the flight attendant.
7. Never mount or store your headset over any air bag deployment area as serious injury could result upon deployment.
8. Do not attempt to disassemble the headset as it does not contain serviceable components.
9. Headset builds with battery inside and should dispose of it according to local regulations, not as a household waste.

Maintenance

1. Do not yank or forcibly pull the earphone cord.
2. Consider turning your headset off before placing it in your pocket or bag. If the MFB is accidentally pushed, your mobile phone may place an unintended call.
3. Do not expose the headset to liquid or humidity, as it is not waterproof.
4. Do not use abrasive cleaning solvents to clean the headset.
5. Do not expose the headset to extremely high or low temperatures.
6. Do not expose your headset to contact with sharp objects as this will cause scratches and damage.
7. Do not stick anything inside the headset as this may damage internal components.
8. Do not attempt to replace the headset's battery. It is built-in and is not removable.
9. Use only the manufacturer supplied charger when charging the headset.
10. Do not disassemble the charger as it may expose you to dangerous voltages or other risks. Incorrect reassembly can cause electric shock when the headset is subsequently used.

Federal Communications Commission (FCC) Interference Statement
This equipment has been tested and found to comply with the limits for a Class B digital device, pursuant to Part 15 of the FCC Rules.

These limits are designed to provide reasonable protection against harmful interference in a residential installation. This equipment generate, uses and can radiate radio frequency energy and, if not installed and used in accordance with the instructions, may cause harmful interference to radio communications.
However, there is no guarantee that interference will not occur in a particular installation. If this equipment does cause harmful interference to radio or television reception, which can be determined by turning the equipment off and on, the user is encouraged to try to correct the interference by one of the following measures:

- Reorient or relocate the receiving antenna.
- Increase the separation between the equipment and receiver.
- Connect the equipment into an outlet on a circuit different from that to which the receiver is connected.
- Consult the dealer or an experienced radio/TV technician for help.

This device complies with Part 15 of the FCC Rules. Operation is subject to the following two conditions:
(1) This device may not cause harmful interference, and (2) this device must accept any interference received, including interference that may cause undesired operation.

FCC Caution: Any changes or modifications not expressly approved by the party responsible for compliance could void the user's authority to operate this equipment.

RF exposure warning

This equipment complies with FCC radiation exposure limits set forth for an uncontrolled environment.
The equipment must not be co-located or operating in conjunction with any other antenna or transmitter.