MEASUREMENT REPORT

FCC PART 15.247 / RSS-247 Bluetooth-LE

FCC ID:	WDU-BPHP
IC:	25424-BPHP
APPLICANT:	Nanjing Chervon Industry Co., Ltd
Application Type:	Certification
Product:	Batterypack
Model No.:	8709, BP 18 Li 4,0 HPC-ASI
FCC Classification:	Digital Transmission System (DTS)
FCC Rule Part(s):	Part15 Subpart C (Section 15.247)
IC Rule(s):	RSS-247 Issue 2, RSS-GEN Issue 5
Test Procedure(s):	ANSI C63.10-2013, KDB 558074 D01v05r02
Test Date:	September26 ~ November 06, 2019

Reviewed By: (Kevin Guo)

Approved By: (Robin Wu)

ACCREDITED
TESTING LABORATORY
CERTIFICATE #3628.01

The test results relate only to the samples tested.
This equipment has been shown to be capable of compliance with the applicable technical standards as indicated in the measurement report and was tested in accordance with the measurement procedures specified in ANSI C63.10-2013. Test results reported herein relate only to the item(s) tested.
The test report shall not be reproduced except in full without the written approval of MRT Technology (Suzhou) Co., Ltd.

Revision History

Report No.	Version	Description	Issue Date	Note
1909WSU012-U1	Rev. 01	Initial report	11-18-2019	Valid

CONTENTS

Description Page

General Information **6**

1. INTRODUCTION **7**

1.1. Scope 7
1.2. MRT Test Location 7

2. PRODUCT INFORMATION **8**

2.1. Feature of Equipment under Test 8
2.2. Product Specification 8
2.3. WorkingFrequencies for this Report 9
2.4. Test Mode 9
2.5. Device Capabilities 10
2.6. Test Configuration 10
2.7. EMI Suppression Device(s)/Modifications 10
2.8. Description of Test Software 10
2.9. Labeling Requirements 11

3. DESCRIPTION OF TEST **12**

3.1. Evaluation Procedure 12
3.2. AC Line Conducted Emissions 12
3.3. Radiated Emissions 13

4. ANTENNA REQUIREMENTS **14**

5. TEST EQUIPMENT CALIBRATION DATE **15**

6. MEASUREMENT UNCERTAINTY **17**

7. TEST RESULT **18**

7.1. Summary 18
7.2. 99%Bandwidth Measurement 19
7.2.1. Test Limit 19
7.2.2. Test Procedure used 19
7.2.3. TestSetting 19
7.2.4. Test Setup 19
7.2.5. TestResult 20
7.3. 6dB Bandwidth Measurement 21
7.3.1. Test Limit 21
7.3.2. Test Procedure used 21
7.3.3. TestSetting 21

7.3.4. Test Setup 21
7.3.5. Test Result 22
7.4. Output Power Measurement 23
7.4.1. Test Limit 23
7.4.2. Test Procedure Used 23
7.4.3. Test Setting 23
7.4.4. Test Setup 24
7.4.5. Test Result 25
7.5. Power Spectral Density Measurement 26
7.5.1. TestLimit 26
7.5.2. Test Procedure Used 26
7.5.3. Test Setting 26
7.5.4. Test Setup 26
7.5.5. Test Result 27
7.6. ConductedBand Edge and Out-of-Band Emissions 28
7.6.1. TestLimit 28
7.6.2. Test Procedure Used 28
7.6.3. Test Setting 28
7.6.4. Test Setup 29
7.6.5. Test Result 30
7.7. Radiated Spurious Emission Measurement 32
7.7.1. Test Limit 32
7.7.2. Test Procedure Used 32
7.7.3. Test Setting 33
7.7.4. Test Setup 34
7.7.5. Test Result 36
7.8. Radiated Restricted Band Edge Measurement 41
7.8.1. Test Limit 41
7.8.2. Test Procedure Used 44
7.8.3. Test Setting 44
7.8.4. Test Setup 45
7.8.5. Test Result 46
7.9. AC Conducted Emissions Measurement 54
7.9.1. TestLimit 54
7.9.2. Test Setup 54
7.9.3. Test Result 55

8. CONCLUSION 57

Appendix A - Test Setup Photograph 58

Appendix B-EUT Photograph 59

General Information

Applicant:	Nanjing Chervon Industry Co., Ltd
Applicant Address:	529 Jiang-jun Rd., Jiangning Economic & Technical Development Zone, Nanjing, Jiangsu 211106 P.R. China
Manufacturer:	Nanjing Chervon Industry Co., Ltd
Manufacturer Address:	529 Jiang-jun Rd., Jiangning Economic & Technical Development Zone, Nanjing, Jiangsu 211106 P.R. China
Test Site:	MRT Technology (Suzhou) Co., Ltd
Test Site Address:	D8 Building, No.2 Tian'edang Rd., Wuzhong Economic Development Zone, Suzhou, China
Test Device Serial No.:	N/A ☐ Production ☒ Pre-Production ☐ Engineering

Test Facility / Accreditations

Measurements were performed at MRT Laboratory located in Tian'edangRd.,Suzhou, China.

- **MRT facility is a FCC registered (MRT Reg. No. 893164) test facility with the site description report on file and has met all the requirements specified in ANSI C63.4-2014.**
- **MRT facility is an IC registered (MRT Reg. No. 11384A-1) test laboratory with the site description on file at Industry Canada.**
- **MRT facility is a VCCI registered (R-20025, G-20034, C-20020, T-20020) test laboratory with the site description on file at VCCI Council.**
- **MRT Lab is accredited to ISO 17025 by the American Association for Laboratory Accreditation (A2LA) under the American Association for Laboratory Accreditation Program (A2LACert. No.3628.01) in EMC, Telecommunications, Radio and SAR testing.**

ilac-MRA A2LA

Accredited Laboratory

A2LA has accredited

MRT TECHNOLOGY (SUZHOU) CO., LTD.

Suzhou, Jiangsu, People's Republic of China

for technical competence in the field of

Electrical Testing

This laboratory is accredited in accordance with the recognized International Standard ISO/IEC 17025:2017 General requirements for the competence of testing and calibration laboratories. This accreditation demonstrates technical competence for a defined scope and the operation of a laboratory quality management system (refer to joint ISO-ILAC-IAF Communiqué dated April 2017).

Presented this 24th day of July 2018.

President and CEO
For the Accreditation Council
Certificate Number 3628.01
Valid to August 31, 2020

For the tests to which this accreditation applies, please refer to the laboratory's Electrical Scope of Accreditation.

1. INTRODUCTION

1.1. Scope

Measurement and determination of electromagnetic emissions (EMC) of radio frequency devices including intentional and/or unintentional radiators for compliance with the technical rules and regulations of the Federal Communications Commission and the Innovation, Science and Economic Development Canada and Certification and Engineering Bureau.

1.2. MRT Test Location

The map below shows the location of the MRT LABORATORY, its proximity to the Taihu Lake. These measurement tests were conducted at the MRT Technology (Suzhou) Co., Ltd. Facility located at D8 Building, No.2 Tian'edang Rd., Wuzhong Economic Development Zone, Suzhou, China. The measurement facility compliant with the test site requirements specified in ANSI C63.4-2014.

2. PRODUCT INFORMATION

2.1. Feature of Equipment under Test

Product Name:	Batterypack
Model No.:	8709, BP 18 Li 4,0 HPC-ASI
Bluetooth Version:	V4.0single mode

Note 1: Different models are for different customers, and there is the same design between these models.

Note 2: Adapter (Model: ADS-12B-06 05010E) used for test is provided by manufacturer.

2.2. Product Specification

Bluetooth Frequency:	2402~2480MHz
Channel Number:	40
Type of modulation:	GFSK
Data Rate:	1Mbps
Antenna Type:	PCB Antenna
Antenna Gain:	0dBi

2.3. WorkingFrequencies for this Report

Channel	Frequency	Channel	Frequency	Channel	Frequency
00	2402 MHz	01	2404 MHz	02	2406 MHz
03	2408 MHz	04	2410 MHz	05	2412 MHz
06	2414 MHz	07	2416 MHz	08	2418 MHz
09	2420 MHz	10	2422 MHz	11	2424 MHz
12	2426 MHz	13	2428 MHz	14	2430 MHz
15	2432 MHz	16	2434 MHz	17	2436 MHz
18	2438 MHz	19	2440 MHz	20	2442 MHz
21	2444 MHz	22	2446 MHz	23	2448 MHz
24	2450 MHz	25	2452 MHz	26	2454 MHz
27	2456 MHz	28	2458 MHz	29	2460 MHz
30	2462 MHz	31	2464 MHz	32	2466 MHz
33	2468 MHz	34	2470 MHz	35	2472 MHz
36	2474 MHz	37	2476 MHz	38	2478 MHz
39	2480 MHz	--	--	--	--

2.4. Test Mode

Test Mode	Mode 1: Transmit by BLE

2.5. Device Capabilities

This device contains the following capabilities:

Bluetooth v4.0 (Single mode) (DTS).

Note: The maximum achievable duty cycles was determined based on measurements performed on a spectrum analyzer in zero-span mode with RBW = 8MHz, VBW = 50MHz. The RBW and VBW were both greater than 50/T, where T is the minimum transmission duration, and the number of sweep points across T was greater than 100. The duty cycles are as follows:

Test Mode	Duty Cycle
BLE	62.41%

Duty Cycle (T = Transmission Duration)	
BLE (T = 0.3895ms)	

2.6. Test Configuration

The device was tested per the guidance of ANSI C63.10-2013, which is used as the reference of appropriate EUT setup for radiated spurious emissions testing and AC line conducted testing.

2.7. EMI Suppression Device(s)/Modifications

No EMI suppression device(s) were added and/or no modifications were made during testing.

2.8. Description of Test Software

The test utility software used during testing was “nRFgo Studio”, and the version was 1.12.1.1992.

2.9. Labeling Requirements

Per 2.1074 & 15.19; Docket 95-19

The label shall be permanently affixed at a conspicuous location on the device; instruction manual or pamphlet supplied to the user and be readily visible to the purchaser at the time of purchase. However, when the device is so small wherein placement of the label with specified statement is not practical, only the FCC ID must be displayed on the device per Section 15.19(a)(5). Please see attachment for FCC ID label and label location.

RSP-100 Issue 12

The manufacturer, importer or distributor shall meet the labeling requirements set out in this section for every unit:

(i) prior to marketing in Canada, for products manufactured in Canada

(ii) prior to importation into Canada, for imported products

For information regarding the e-labeling option, see Notice 2014-DRS1003. The label for the certified product represents the manufacturer's or importer's compliance with Innovation, Science and Economic Development Canada's (ISED) regulatory requirements.

Please see attachment for IC label and label location.

3. DESCRIPTION OF TEST

3.1. Evaluation Procedure

The measurement procedures described in the American National Standard of Procedures for Compliance Testing of Unlicensed Wireless Devices (ANSI C63.10-2013), and were used in the measurement.

Deviation from measurement procedure…….....None

3.2. AC Line Conducted Emissions

The line-conducted facility is located inside an8'x4'x4' shielded enclosure. A 1m x 2m wooden table 80cm high is placed 40cm away from the vertical wall and 80cm away from the sidewall of the shielded room. Two 10kHz-30MHz, 50Ω/50uH Line-Impedance Stabilization Networks (LISNs) are bonded to the shielded room floor. Power to the LISNs is filtered by external high-current high-insertion loss power line filters. These filters attenuate ambient signal noise from entering the measurement lines. These filters are also bonded to the shielded enclosure.

The EUT is powered from one LISN and the support equipment is powered from the second LISN. All interconnecting cables more than 1 meter were shortened to a 1 meter length by non-inductive bundling (serpentine fashion) and draped over the back edge of the test table. All cables were at least 40cm above the horizontal reference ground-plane. Power cables for support equipment were routed down to the second LISN while ensuring that that cables were not draped over the second LISN.

Sufficient time for the EUT, support equipment, and test equipment was allowed in order for them to warm up to their normal operating condition. The RF output of the LISN was connected to the receiver and exploratory measurements were made to determine the frequencies producing the maximum emission from the EUT. The receiver was scanned from 150kHz to 30MHz. The detector function was set to peak mode for exploratory measurements while the bandwidth of the analyzer was set to 9kHz. The EUT, support equipment, and interconnecting cables were arranged and manipulated to maximize each emission. Each emission was also maximized by varying: power lines, the mode of operation or data exchange speed, or support equipment whichever determined the worst-case emission. Once the worst case emissions have been identified, the one EUT cable configuration/arrangement and mode of operation that produced these emissions were used for final measurements on the same test site. The analyzer is set to CISPR quasi-peak and average detectors with a 9kHz resolution bandwidth for final measurements.

An extension cord was used to connect to a single LISN which powered by EUT. The extension cord was calibrated with LISN, the impedance and insertion loss are compliance with the requirements as stated in ANSI C63.10-2013.

3.3. Radiated Emissions

The radiated test facilities consisted of an indoor 3 meter semi-anechoic chamber used for final measurements and exploratory measurements, when necessary. The measurement area is contained within the semi-anechoic chamber which is shielded from any ambient interference. For measurements above 1GHz absorbers are arranged on the floor between the turn table and the Antenna mast in such a way so as to maximize the reduction of reflections. For measurements below 1GHz, the absorbers are removed. A MF Model 210SS turntable is used for radiated measurement. It is a continuously rotatable, remote controlled, metallic turntable and 2 meters (6.56 ft.) in diameter. The turn table is flush with the raised floor of the chamber in order to maintain its function as a ground plane. An80cm high PVC support structure is placed on top of the turntable. For all measurements, the spectrum was scanned through all EUT azimuths and from 1 to 4 meter receive Antenna height using a broadband Antenna from 30MHz up to the upper frequency shown in 15.33(b)(1) depending on the highest frequency generated or used in the device or on which the device operates or tunes. For frequencies above 1GHz, linearly polarized double ridge horn Antennas were used. For frequencies below 30MHz, a calibrated loop Antenna was used. When exploratory measurements were necessary, they were performed at 1 meter test distance inside the semi-anechoic chamber using broadband Antennas, broadband amplifiers, and spectrum analyzers to determine the frequencies and modes producing the maximum emissions. Sufficient time for the EUT, support equipment, and test equipment was allowed in order for them to warm up to their normal operating condition. The test set-up for frequencies below 1GHz was placed on top of the 0.8 meter high, 1 x 1.5 meter table; and test set-up for frequencies 1-40GHz was placed on top of the 1.5 meter high, 1 x 1.5 meter table. The EUT, support equipment, and interconnecting cables were arranged and manipulated to maximize each emission. Appropriate precaution was taken to ensure that all emissions from the EUT were maximized and investigated. The system configuration, clock speed, mode of operation or video resolution, if applicable, turntable azimuth, and receive Antenna height was noted for each frequency found.

Final measurements were made in the semi-anechoic chamber using calibrated, linearly polarized broadband and horn Antennas. The test setup was configured to the setup that produced the worst case emissions. The spectrum analyzer was set to investigate all frequencies required for testing to compare the highest radiated disturbances with respect to the specified limits. The turntable containing the EUT was rotated through 360 degrees and the height of the receive Antenna was varied 1 to 4 meters and stopped at the azimuth and height producing the maximum emission. Each emission was maximized by changing the orientation of the EUT through three orthogonal planes and changing the polarity of the receive Antenna, whichever produced the worst-case emissions. According to 3dB Beam-Width of horn Antenna, the horn Antenna should be always directed to the EUT when rising height.

4. ANTENNA REQUIREMENTS

Excerpt from §15.203 of the FCC Rules/Regulations:

"An intentional radiator antenna shall be designed to ensure that no antenna other than that furnished by the responsible party can be used with the device. The use of a permanently attached antenna or of an antenna that uses a unique coupling to the intentional radiator shall be considered sufficient to comply with the provisions of this section."

- The antenna of the device is **permanently attached.**
- There are no provisions for connection to an external antenna.

Conclusion:

The unit complies with the requirement of §15.203.

5. TEST EQUIPMENT CALIBRATION DATE

Conducted Emissions - SR2

Instrument	Manufacturer	Type No.	Asset No.	Cali. Interval	Cali. Due Date
EMI Test Receiver	R&S	ESR3	MRTSUE06185	1 year	2020/04/15
Two-Line V-Network	R&S	ENV 216	MRTSUE06002	1 year	2020/06/13
Two-Line V-Network	R&S	ENV 216	MRTSUE06003	1 year	2020/06/13
Thermohygrometer	testo	608-H1	MRTSUE06404	1 year	2020/08/08
Shielding Room	MIX-BEP	Chamber-SR2	MRTSUE06215	N/A	N/A

Radiated Emissions - AC1

Instrument	Manufacturer	Type No.	Asset No.	Cali. Interval	Cali. Due Date
EMI Test Receiver	R&S	ESR7	MRTSUE06001	1 year	2020/08/02
EXA Signal Analyzer	Agilent	N9020A	MRTSUE06106	1 year	2020/04/15
Loop Antenna	Schwarzbeck	FMZB 1519	MRTSUE06025	1 year	2019/11/09
Bilog Period Antenna	Schwarzbeck	VULB 9168	MRTSUE06172	1 year	2020/03/31
Broad Band Horn Antenna	Schwarzbeck	BBHA9120D	MRTSUE06023	1 year	2020/10/13
Broad Band Horn Antenna	Schwarzbeck	BBHA9170	MRTSUE06024	1 year	2019/12/17
Microwave System Amplifier	Agilent	83017A	MRTSUE06076	1 year	2019/11/16
Preamplifier	Schwarzbeck	BBV 9721	MRTSUE06121	1 year	2020/06/11
Thermohygrometer	Testo	608-H1	MRTSUE06403	1 year	2020/08/08
Anechoic Chamber	TDK	Chamber-AC1	MRTSUE06212	1 year	2020/04/30

Radiated Emission - AC2

Instrument	Manufacturer	Type No.	Asset No.	Cali. Interval	Cali. Due Date
MXE EMI Receiver	Agilent	N9038A	MRTSUE06125	1 year	2020/08/01
Loop Antenna	Schwarzbeck	FMZB 1519	MRTSUE06025	1 year	2019/11/09
Bilog Period Antenna	Schwarzbeck	VULB 9162	MRTSUE06022	1 year	2020/10/13
Broad-Band Horn Antenna	Schwarzbeck	BBHA9120D	MRTSUE06171	1 year	2019/11/09
Broad Band Horn Antenna	Schwarzbeck	BBHA9170	MRTSUE06024	1 year	2019/12/17
Broadband Coaxial Preamplifier	Schwarzbeck	BBV 9718	MRTSUE06176	1 year	2019/11/16
Preamplifier	Schwarzbeck	BBV 9721	MRTSUE06121	1 year	2020/06/11
Digitial Thermometer & Hygrometer	Minggao	ETH529	MRTSUE06170	1 year	2019/12/13
Anechoic Chamber	RIKEN	Chamber-AC2	MRTSUE06213	1 year	2020/04/30

Conducted Test Equipment - TR3

Instrument	Manufacturer	Type No.	Asset No.	Cali. Interval	Cali. Due Date
EXA Signal Analyzer	Keysight	N9010A	MRTSUE06195	1 year	2020/04/15
EXA Signal Analyzer	Keysight	N9010B	MRTSUE06452	1 year	2020/07/11
EXA Signal Analyzer	Agilent	N9020A	MRTSUE06106	1 year	2020/04/15
Signal Analyzer	R&S	FSV40	MRTSUE06218	1 year	2020/04/15
Power Meter	Agilent	U2021XA	MRTSUE06030	1 year	2019/11/16
USB wideband power sensor	Keysight	U2021XA	MRTSUE06446	1 year	2020/06/13
USB wideband power sensor	Keysight	U2021XA	MRTSUE06447	1 year	2020/06/30
Bluetooth Test Set	Anritsu	MT8852B-042	MRTSUE06389	1 year	2020/06/13
Audio Analyzer	Agilent	U8903B	MRTSUE06143	1 year	2020/06/13
Modulation Analyzer	Hewlett Packard	HP8901A	MRTSUE06098	1 year	2020/10/10
Wideband Radio Communication Tester	R&S	CMW 500	MRTSUE06243	1 year	2019/11/16
DC Power Supply	GWINSTEK	DPS-3303C	MRTSUE06064	N/A	N/A
Temperature & Humidity Chamber	BAOYT	BYH-150CL	MRTSUE06051	1 year	2019/11/16
Thermohygrometer	Testo	608-H1	MRTSUE06401	1 year	2020/08/08

Software	Version	Function
EMI Software	V3	EMI Test Software

6. MEASUREMENT UNCERTAINTY

Where relevant, the following test uncertainty levels have been estimated for tests performed on the EUT as specified in CISPR 16-4-2. This uncertainty represents an expanded uncertainty expressed at approximately the 95% confidence level using a coverage factor of k = 2.

AC Conducted Emission Measurement - SR2
Measuring Uncertainty for a Level of Confidence of 95% (U=2Uc(y)): 9kHz~150kHz: 3.84dB 150kHz~30MHz: 3.46dB
Radiated Emission Measurement- AC1
Measuring Uncertainty for a Level of Confidence of 95% (U=2Uc(y)): Horizontal: 30MHz~300MHz: 4.07dB 300MHz~1GHz: 3.63dB 1GHz~18GHz: 4.16dB Vertical: 30MHz~300MHz: 4.18dB 300MHz~1GHz: 3.60dB 1GHz~18GHz: 4.76dB
Radiated Emission Measurement- AC2
Measuring Uncertainty for a Level of Confidence of 95% (U=2Uc(y)): Horizontal: 30MHz~300MHz: 3.75dB 300MHz~1GHz: 3.53dB 1GHz~18GHz: 4.28dB Vertical: 30MHz~300MHz: 3.86dB 300MHz~1GHz: 3.53dB 1GHz~18GHz: 4.33dB

7. TEST RESULT

7.1. Summary

FCC Part Section(s)	IC Section(s)	Test Description	Test Limit	Test Condition	Test Result	Reference
N/A	RSS-GEN [6.7]	99% Bandwidth	N/A	Conducted	Pass	Section7.2
15.247(a)(2)	RSS-247 [5.2]	6dB Bandwidth	≥ 500kHz		Pass	Section7.3
15.247(b)(3)	RSS-247 [5.4(d)]	Output Power	≤ 1Watt& EIRP ≤ 4Watt		Pass	Section 7.4
15.247(e)	RSS-247 [5.2]	Power Spectral Density	≤ 8dBm / 3kHz		Pass	Section 7.5
15.247(d)	RSS-247 [5.5]	Band Edge / Out-of-Band Emissions	≥ 20dBc(Peak)		Pass	Section 7.6
15.205 15.209	RSS-247 [5.5]	General Field Strength Limits(Restricted Bands and Radiated Emission Limits)	Emissions in restricted bands must meet the radiated limits detailed in15.209	Radiated	Pass	Section 7.7 Section7.8
15.207	RSS-Gen [8.8]	AC Conducted Emissions 150kHz - 30MHz	< FCC 15.207 limits>	Line Conducted	Pass	Section 7.9

Notes:

1) The analyzer plots shown in this section were all taken with a correction table loaded into the analyzer. The correction table was used to account for the losses of the cables and attenuators used as part of the system to connect the EUT to the analyzer at all frequencies of interest.
2) All modes of operation and data rates were investigated. For radiated emission test, every axis (X, Y, Z) was also verified. The test results shown in the following sections represent the worst case emissions.

7.2. 99%Bandwidth Measurement

7.2.1.Test Limit

N/A

7.2.2.Test Procedure used

ANSI C63.10-2013 Section 6.9.3

7.2.3.TestSetting

1. Set center frequency to the nominal EUT channel center frequency.
2. Span = 1.5 times to 5.0 times the OBW.
3. RBW = 1 % to 5 % of the OBW.
4. VBW ≥ 3×RBW.
5. Detector = Peak.
6. Trace mode = max hold.
7. Use the 99 % power bandwidth function of the instrument.

7.2.4.Test Setup

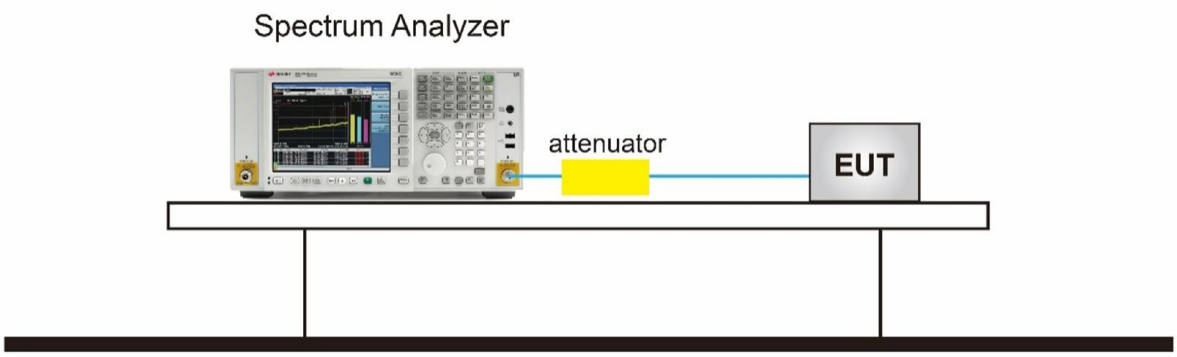

7.2.5.TestResult

Product	Batterypack	Temperature	25℃
Test Engineer	Yuri Li	Relative Humidity	52%
Test Site	TR3	Test Date	2019/11/01

Test Mode	Data Rate / Mbps	Channel No.	Frequency (MHz)	99% Bandwidth (MHz)	Result
BLE	1	00	2402	1.06	Pass
BLE	1	20	2442	1.05	Pass
BLE	1	39	2480	1.05	Pass

BLE99% Bandwidth

Channel 00 (2402MHz)

Channel 19 (2440MHz)

Channel 39 (2480MHz)

7.3. 6dB Bandwidth Measurement

7.3.1.Test Limit

The minimum 6dBbandwidth shall be at least 500 kHz.

7.3.2.Test Procedure used

ANSI C63.10-2013- Section 11.8

7.3.3.TestSetting

1. The Spectrum's automatic bandwidth measurement capability was used to perform the 6dB bandwidth measurement. The "X" dB bandwidth parameter was set to X = 6. The bandwidth measurement was not influenced by any intermediate power nulls in the fundamental emission.
2. Set RBW = 100 kHz
3. VBW ≥ 3 × RBW
4. Detector = Peak
5. Trace mode = Max hold
6. Sweep = Auto couple
7. Allow the trace was allowed to stabilize

7.3.4.Test Setup

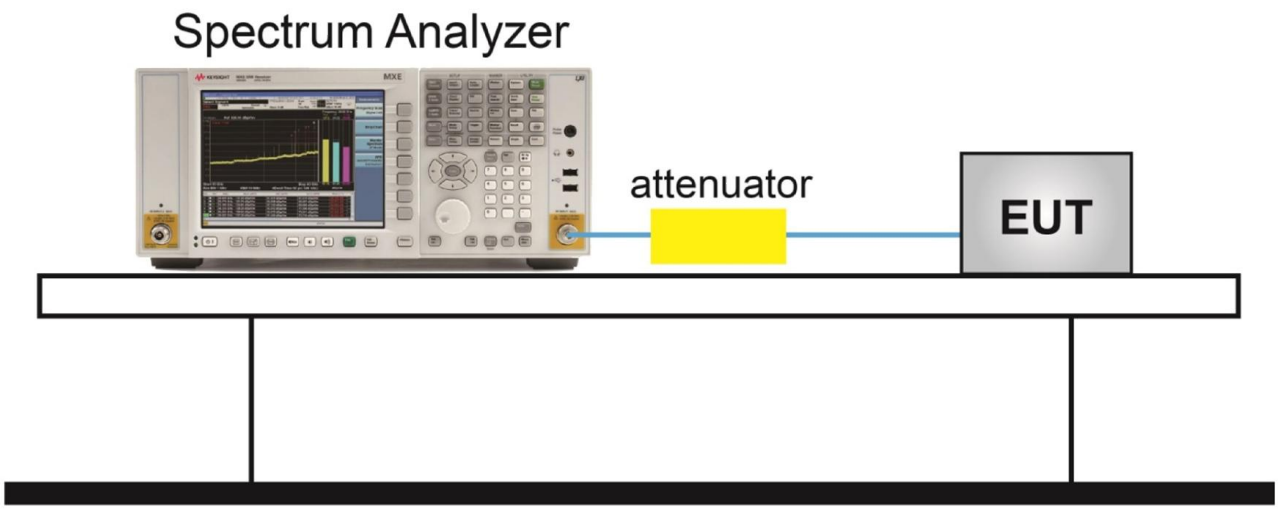

7.3.5.Test Result

Product	Batterypack	Temperature	25℃
Test Engineer	Yuri Li	Relative Humidity	52%
Test Site	TR3	Test Date	2019/10/31

Test Mode	Data Rate (Mbps)	Channel No.	Frequency (MHz)	6dB Bandwidth (MHz)	Limit (MHz)	Result
BLE	1	00	2402	0.70	≥0.5	Pass
BLE	1	19	2440	0.70	≥0.5	Pass
BLE	1	39	2480	0.68	≥0.5	Pass

BLE 6dB Bandwidth

Channel 00 (2402MHz)

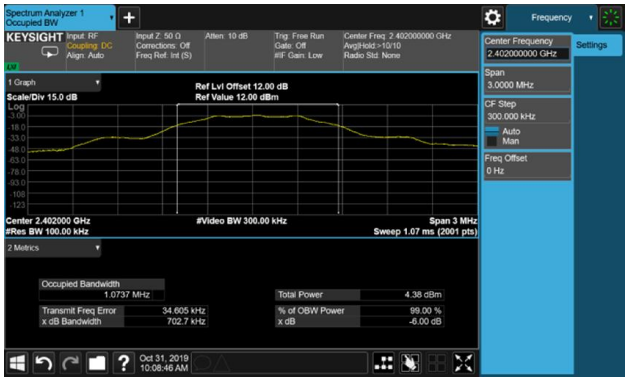

Channel 19 (2440MHz)

Channel 39 (2480MHz)

7.4. Output Power Measurement

7.4.1.Test Limit

The maximum out power shall be less than 1 Watt (30dBm) and the E.I.R.P shall not exceed 4 Watt (36dBm).

The conducted output power limit specified in paragraph FCC Part 15.247(b) of this section is based on the use of antennas with directional gains that do not exceed 6 dBi. If transmitting antennas of directional gain greater than 6 dBi are used, the conducted output power from the intentional radiator shall be reduced below the stated values in paragraphs FCC Part 15.247(b)(3) of this section, as appropriate, by the amount in dB that the directional gain of the antenna exceeds 6 dBi.

7.4.2.Test Procedure Used

ANSI C63.10 - Section 11.9.1.3

ANSI C63.10 - Section 11.9.2.3.2

7.4.3.Test Setting

Method PKPM1 (Peak Power Measurement)

Peak power measurements were performed only when the EUT was transmitting at its maximum power control level using a broadband power meter with a pulse sensor. The pulse sensor employs a VBW = 50MHz so this method was only used for signals whose DTS bandwidth was less than or equal to 50MHz.

Method AVGPM-G (Measurement using a gated RF average-reading power meter)

Measurements may be performed using a wideband gated RF power meter provided that the gate parameters are adjusted such that the power is measured only when the EUT is transmitting at its maximum power control level. Since this measurement is made only during the ON time of the transmitter, no duty cycle correction is required.

7.4.4.Test Setup

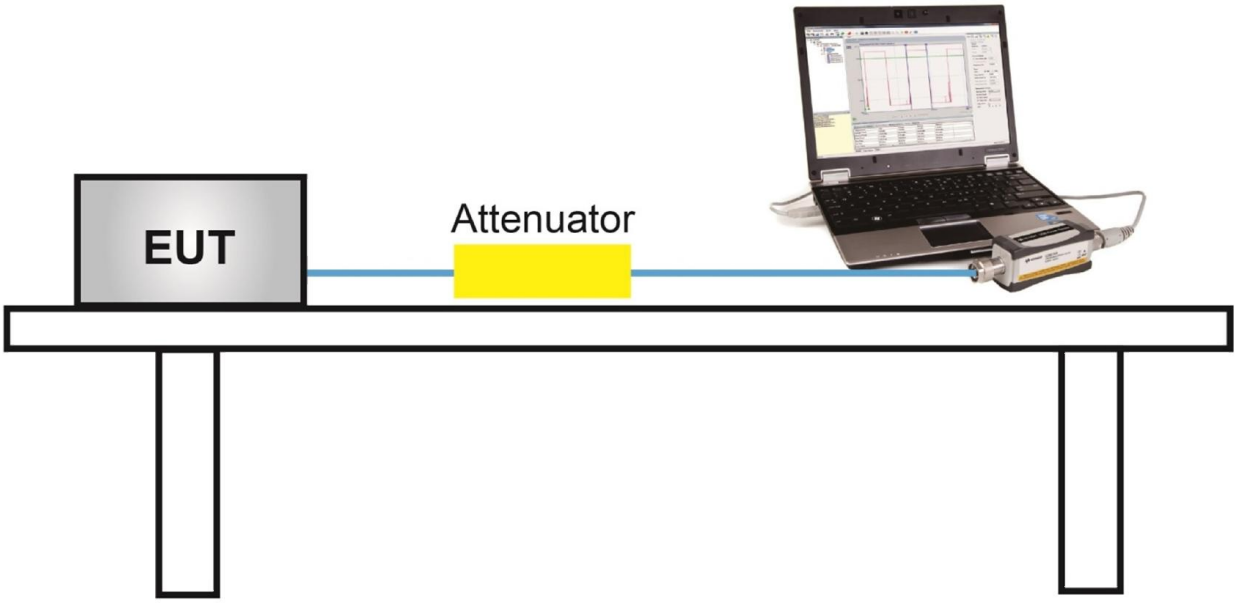

7.4.5.Test Result

Product	Batterypack	Temperature	25℃
Test Engineer	Yuri Li	Relative Humidity	52%
Test Site	TR3	Test Date	2019/10/31

Test Result of Peak Output Power

Test Mode	Data Rate (Mbps)	Channel No.	Frequency (MHz)	Peak Power (dBm)	Limit (dBm)	E.I.R.P (dBm)	E.I.R.P Limit (dBm)	Result
BLE	1	00	2402	-1.67	≤ 30.00	-1.67	≤ 36.00	Pass
BLE	1	19	2440	-1.01	≤ 30.00	-1.01	≤ 36.00	Pass
BLE	1	39	2480	-1.28	≤ 30.00	-1.28	≤ 36.00	Pass

Note: EIRP (dBm) = Peak Power (dBm) + Antenna Gain (dBi), Antenna Gain = 0dBi.

Test Result of Average Output Power (Reporting Only)

Test Mode	Data Rate (Mbps)	Channel No.	Frequency (MHz)	Average Power (dBm)	Limit (dBm)	E.I.R.P (dBm)	E.I.R.P Limit (dBm)	Result
BLE	1	00	2402	-2.10	≤ 30.00	-2.10	≤ 36.00	Pass
BLE	1	19	2440	-1.46	≤ 30.00	-1.46	≤ 36.00	Pass
BLE	1	39	2480	-1.80	≤ 30.00	-1.80	≤ 36.00	Pass

Note: EIRP (dBm) = Average Power (dBm) + Antenna Gain (dBi), Antenna Gain = 0dBi.

7.5. Power Spectral Density Measurement

7.5.1.TestLimit

The maximum permissible power spectral density is 8dBm in any 3 kHz band.

The same method of determining the conducted output power shall be used to determine the power spectral density.

7.5.2.Test Procedure Used

ANSI C63.10 - Section 11.10.2

7.5.3.Test Setting

1. Analyzer was set to the center frequency of the DTS channel under investigation
2. Span = 1.5 times the DTS channel bandwidth
3. RBW = 3kHz
4. VBW = 10kHz
5. Detector = Peak
6. Sweep time = Auto couple
7. Trace mode = Max hold
8. Trace was allowed to stabilize

7.5.4.Test Setup

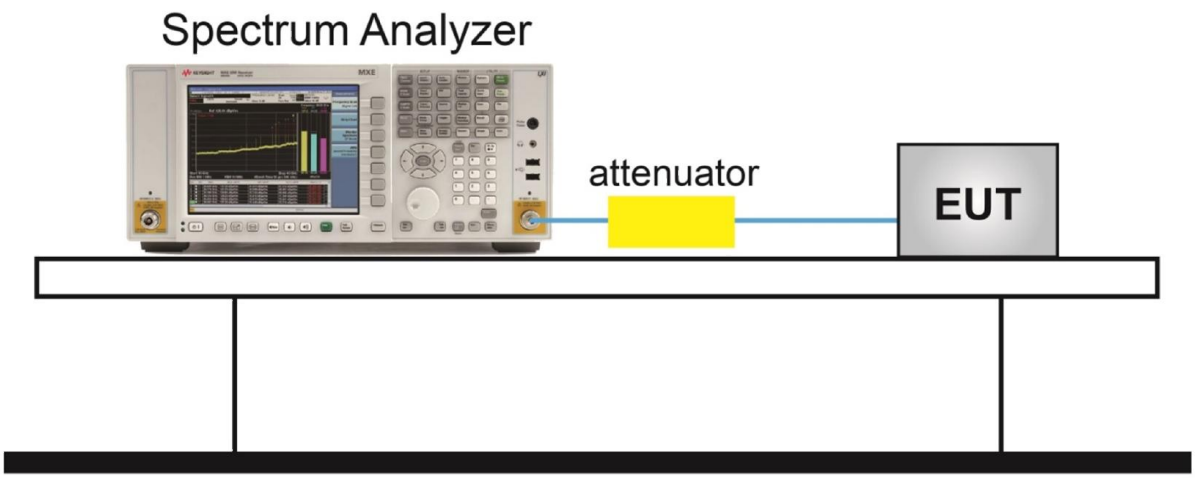

7.5.5.Test Result

Product	Batterypack	Temperature	25℃
Test Engineer	Yuri Li	Relative Humidity	52%
Test Site	TR3	Test Date	2019/10/31

Test Mode	Data Rate (Mbps)	Channel No.	Frequency (MHz)	PSD Result (dBm / 3kHz)	Limit (dBm / 3kHz)	Result
BLE	1	00	2402	-17.50	≤ 8.00	Pass
BLE	1	19	2440	-16.78	≤ 8.00	Pass
BLE	1	39	2480	-16.72	≤ 8.00	Pass

BLE PSD

Channel 00 (2402MHz)

Channel 19 (2440MHz)

Channel 39 (2480MHz)

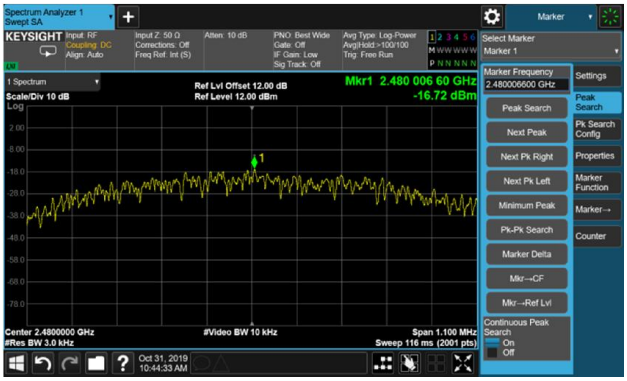

7.6. ConductedBand Edge and Out-of-Band Emissions

7.6.1.TestLimit

The limit for out-of-band spurious emissions at the band edge is 20dB below the fundamental emission level, as determined from the in-band power measurement of the DTS channel performed in a 100kHz bandwidth per the PSD procedure.

7.6.2.Test Procedure Used

ANSI C63.10 - Section 11.11

7.6.3.Test Setting

Reference level measurement

1. Set instrument center frequency to DTS channel center frequency
2. Set the span to ≥ 1.5 times the DTS bandwidth
3. Set the RBW = 100 kHz
4. Set the VBW ≥ 3 x RBW
5. Detector = Peak
6. Sweep time = Auto couple
7. Trace mode = Max hold
8. Allow trace to fully stabilize

Emission level measurement

1. Set the center frequency and span to encompass frequency range to be measured
2. RBW = 100kHz
3. VBW = 300kHz
4. Detector = Peak
5. Trace mode = Max hold
6. Sweep time = Auto couple
7. The trace was allowed to stabilize

Test Notes

1. RBW was set to 1.3MHz rather than 100kHz in order to increase the measurement speed; meanwhile, the VBW was set to 4MHz instead of 300kHz.
2. The display line shown in the following plots denotes the limit at 20dB below the fundamental emission level measured in a 100kHz bandwidth. However, since the traces in the following plots are measured with a 1.3MHz RBW, the display line may not necessarily appear to be 20dB below the level of the fundamental measured in a 1.3MHz bandwidth.
3. For plots showing conducted spurious emissions near the limit, the frequencies were investigated with a reduced RBW to ensure that no emissions were present.

7.6.4.Test Setup

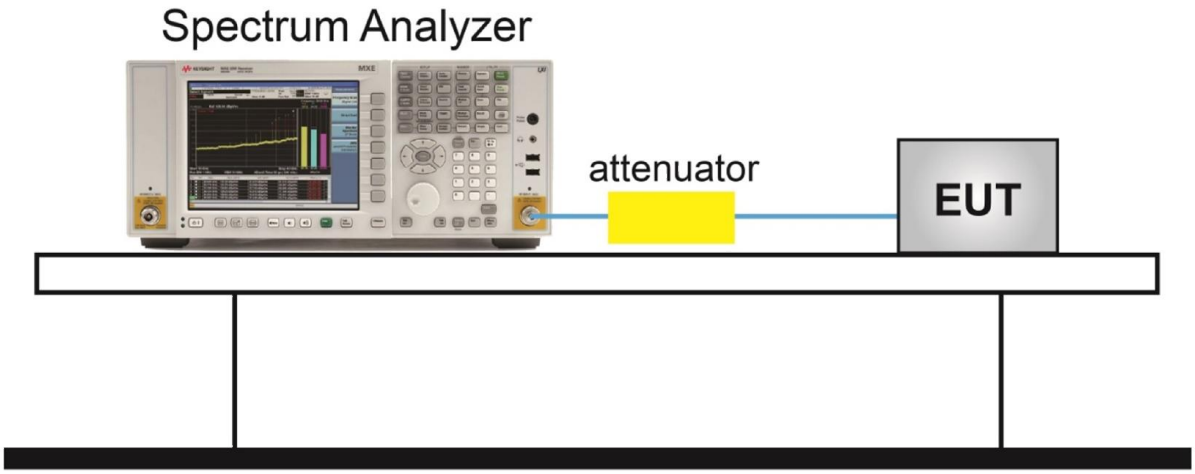

7.6.5.Test Result

Product	Batterypack	Temperature	25℃
Test Engineer	Flag Yang	Relative Humidity	52%
Test Site	TR3	Test Date	2019/10/31

Test Mode	Data Rate (Mbps)	Channel No.	Frequency (MHz)	Limit	Result
BLE	1	00	2402	20dBc	Pass
BLE	1	19	2440	20dBc	Pass
BLE	1	39	2480	20dBc	Pass

BLE Out-of-Band Emissions	
Channel 00 (2402MHz)	
100kHz PSD reference Level	Low Band Edge
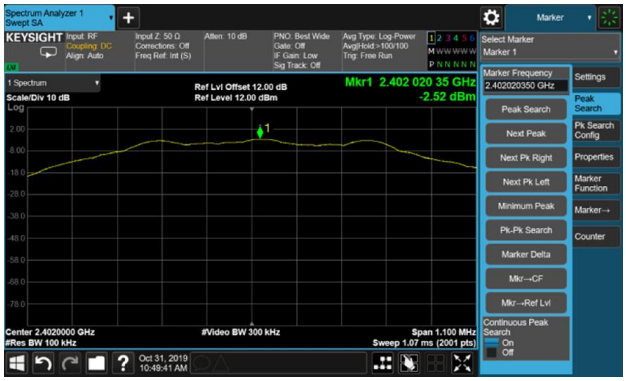	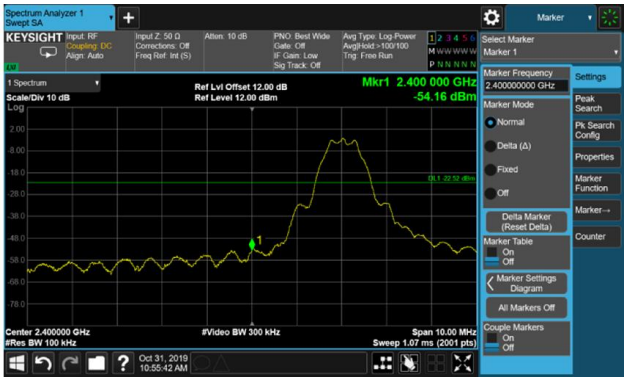
Spurious Emission 30MHz ~ 25GHz	

Channel 19 (2440MHz)	
100kHz PSD reference Level	Spurious Emission 30MHz ~ 25GHz
Channel 39 (2480MHz)	
100kHz PSD reference Level	High Band Edge
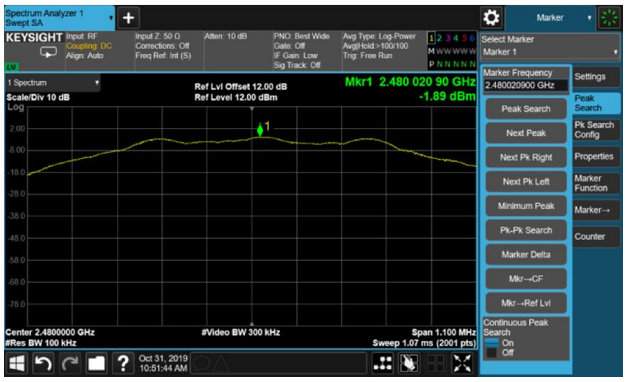	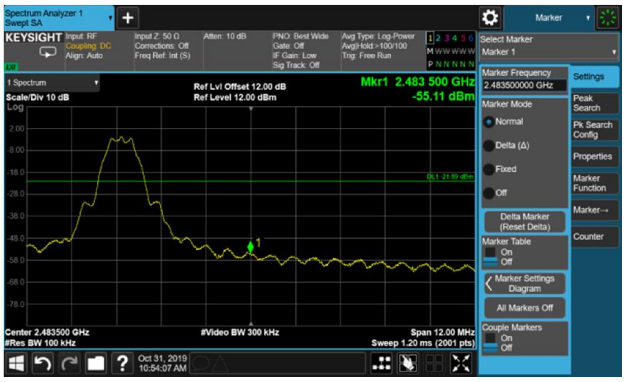
Spurious Emission 30MHz ~ 25GHz	

7.7. Radiated Spurious Emission Measurement

7.7.1.Test Limit

All out of band emissions appearing in a restricted band as specified in Section 15.205 of the Title 47 CFR must not exceed the limits shown in Table per Section 15.209.

FCC Part 15 Subpart C Paragraph 15.209		
Frequency (MHz)	Field Strength (μV/m)	Measured Distance (m)
0.009 - 0.490	2400/F (kHz)	300
0.490 - 1.705	24000/F (kHz)	30
1.705 - 30	30	30
30 - 88	100	3
88 - 216	150	3
216 - 960	200	3
Above 960	500	3

All out of band emissions appearing in a restricted band as specified in Section 8.10of the RSS-Gen must not exceed the limits shown in Table per Section 8.9.

RSS-Gen Section 8.9		
Frequency [MHz]	Field Strength [uV/m]	Measured Distance [Meters]
0.009 - 0.490	2400/F (kHz)	300
0.490 - 1.705	24000/F (kHz)	30
1.705 - 30	30	30
30 - 88	100	3
88 - 216	150	3
216 - 960	200	3
Above 960	500	3

7.7.2.Test Procedure Used

ANSI C63.10 - Section 6.3 (General Requirements)

ANSI C63.10 - Section 6.4 (Standard test method below 30MHz)

ANSI C63.10 - Section 6.5 (Standard test method above 30MHz to 1GHz)

ANSI C63.10 - Section 6.6 (Standard test method above 1GHz)

7.7.3.Test Setting

Table 1 - RBW as a function of frequency

Frequency	RBW
9 ~ 150 kHz	200 ~ 300 Hz
0.15 ~ 30 MHz	9 ~ 10 kHz
30 ~ 1000 MHz	100 ~ 120 kHz
> 1000 MHz	1 MHz

Quasi-Peak Measurements below 1GHz

1. Analyzer center frequency was set to the frequency of the radiated spurious emission of interest
2. Span was set greater than 1MHz
3. RBW = as specified in Table 1
4. Detector = CISPR quasi-peak
5. Sweep time = auto couple
6. Trace was allowed to stabilize

Peak Measurements above 1GHz

1. Analyzer center frequency was set to the frequency of the radiated spurious emission of interest
2. RBW = 1MHz
3. VBW = 3MHz
4. Detector = peak
5. Sweep time = auto couple
6. Trace mode = max hold
7. Trace was allowed to stabilize

Average Measurements above 1GHz (Method VB)

1. Analyzer center frequency was set to the frequency of the radiated spurious emission of interest
2. RBW = 1MHz
3. VBW; If the EUT is configured to transmit with duty cycle ≥ 98%, set VBW = 10Hz

   If the EUT duty cycle is < 98%, set VBW ≥ 1/T. T is the minimum transmission duration
4. Detector = Peak
5. Sweep time = auto
6. Trace mode = max hold
7. Trace was allowed to stabilize

7.7.4.Test Setup

Below 1GHz Test Setup:

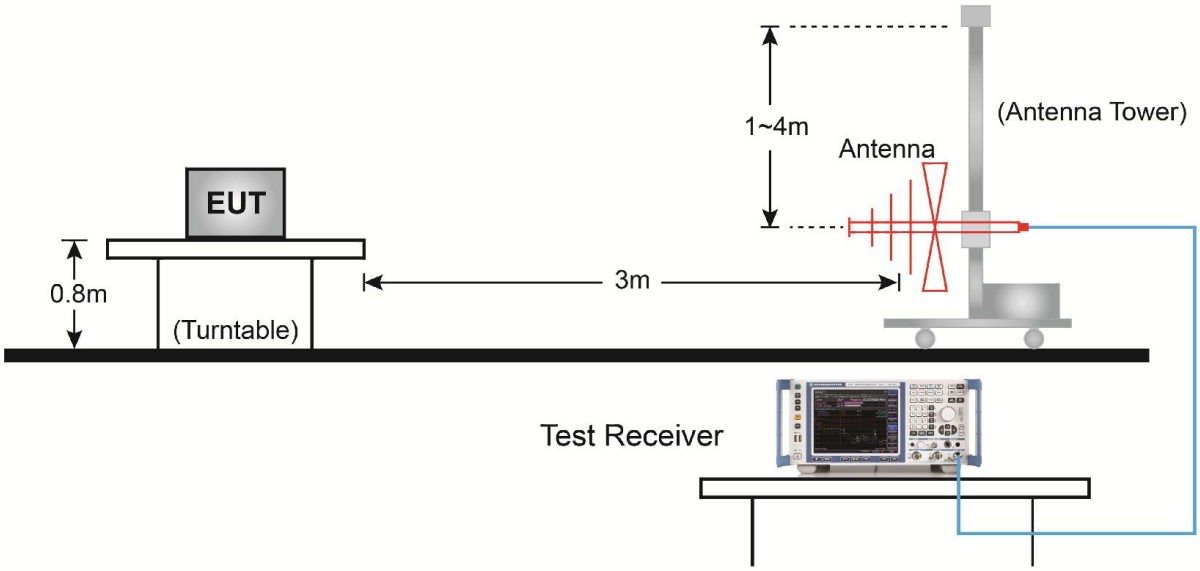

Above1GHz Test Setup:

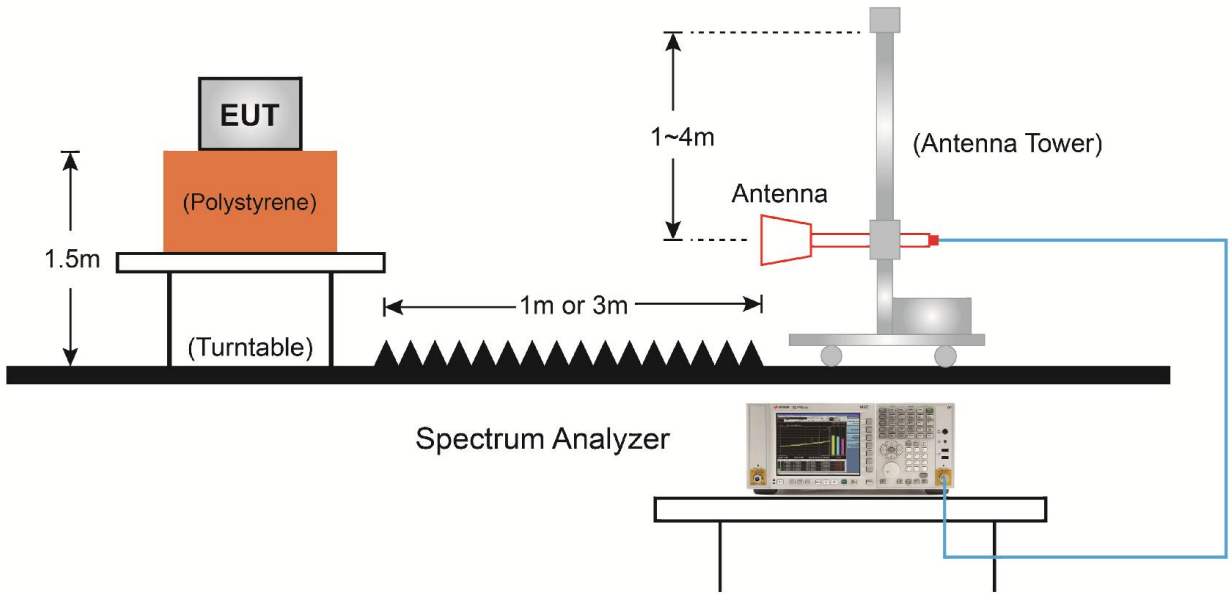

7.7.5.Test Result

Product	Batterypack	Temperature	25℃
Test Engineer	Bacon Dong	Relative Humidity	54%
Test Site	AC1	Test Date	2019/10/31
Test Mode	BLE	Test Channel:	00
Remark	1. Average measurement was not performed if peak level lower than average limit. 2. Other frequency was 20dB below limit line within 1-18GHz, there is not show in the report.		

Mark	Frequency (MHz)	Reading Level (dBμV)	Factor (dB)	Measure Level (dBμV/m)	Limit (dBμV/m)	Margin (dB)	Detector	Polarization
	4808.0	39.9	5.6	45.5	74.0	-28.5	Peak	Horizontal
	5080.0	37.2	6.4	43.6	74.0	-30.4	Peak	Horizontal
*	5998.0	36.5	7.5	44.0	74.0	-30.0	Peak	Horizontal
*	6448.5	35.8	9.1	44.9	74.0	-29.1	Peak	Horizontal
	4808.0	41.1	5.6	46.7	74.0	-27.3	Peak	Vertical
	5080.0	36.3	6.4	42.7	74.0	-31.3	Peak	Vertical
*	6193.5	35.9	8.0	43.9	74.0	-30.1	Peak	Vertical
*	6516.5	36.4	9.5	45.9	74.0	-28.1	Peak	Vertical

Note 1: "*" is not in restricted band, its limit is 20dBc of the fundamental emission level (83.7dBμV/m) or 15.209 which is higher.

Note 2: Measure Level (dBμV/m) = Reading Level (dBμV) + Factor (dB)

Factor (dB) = Cable Loss (dB) + Antenna Factor (dB/m) -Pre_Amplifier Gain (dB)

Product	Batterypack	Temperature	25℃
Test Engineer	Snake Ni	Relative Humidity	54%
Test Site	AC1	Test Date	2019/10/31
Test Mode	BLE	Test Channel:	19
Remark	1. Average measurement was not performed if peak level lower than average limit. 2. Other frequency was 20dB below limit line within 1-18GHz, there is not show in the report.		

Mark	Frequency (MHz)	Reading Level (dBμV)	Factor (dB)	Measure Level (dBμV/m)	Limit (dBμV/m)	Margin (dB)	Detector	Polarization
	4672.0	34.4	5.0	39.4	74.0	-34.6	Peak	Horizontal
	4876.0	38.3	5.7	44.0	74.0	-30.0	Peak	Horizontal
*	6457.0	36.0	9.2	45.2	74.0	-28.8	Peak	Horizontal
*	7052.0	35.4	11.0	46.4	74.0	-27.6	Peak	Horizontal
	4646.5	37.0	4.8	41.8	74.0	-32.2	Peak	Vertical
	4876.0	38.9	5.7	44.6	74.0	-29.4	Peak	Vertical
*	5836.5	35.8	7.4	43.2	74.0	-30.8	Peak	Vertical
*	6542.0	35.7	9.6	45.3	74.0	-28.7	Peak	Vertical

Note 1: "*" is not in restricted band, its limit is 20dBc of the fundamental emission level (85.6dBμV/m) or 15.209 which is higher.

Note 2: Measure Level (dBμV/m) = Reading Level (dBμV) + Factor (dB)

Factor (dB) = Cable Loss (dB) + Antenna Factor (dB/m) -Pre_Amplifier Gain (dB)

Product	Batterypack	Temperature	25℃
Test Engineer	Snake Ni	Relative Humidity	54%
Test Site	AC1	Test Date	2019/10/31
Test Mode	BLE	Test Channel:	39
Remark	1. Average measurement was not performed if peak level lower than average limit. 2. Other frequency was 20dB below limit line within 1-18GHz, there is not show in the report.		

Mark	Frequency (MHz)	Reading Level (dBμV)	Factor (dB)	Measure Level (dBμV/m)	Limit (dBμV/m)	Margin (dB)	Detector	Polarization
	4638.0	36.8	4.8	41.6	74.0	-32.4	Peak	Horizontal
	4961.0	38.0	5.9	43.9	74.0	-30.1	Peak	Horizontal
*	5717.5	36.2	6.9	43.1	74.0	-30.9	Peak	Horizontal
*	6678.0	35.5	9.5	45.0	74.0	-29.0	Peak	Horizontal
	4816.5	35.7	5.6	41.3	74.0	-32.7	Peak	Vertical
	4961.0	36.9	5.9	42.8	74.0	-31.2	Peak	Vertical
*	6100.0	36.5	7.6	44.1	74.0	-29.9	Peak	Vertical
*	6474.0	36.1	9.4	45.5	74.0	-28.5	Peak	Vertical

Note 1: "*" is not in restricted band, its limit is 20dBc of the fundamental emission level (87.9dBμV/m) or 15.209 which is higher.

Note 2: Measure Level (dBμV/m) = Reading Level (dBμV) + Factor (dB)

Factor (dB) = Cable Loss (dB) + Antenna Factor (dB/m) -Pre_Amplifier Gain (dB)

The Worst Case of Radiated Emission below 1GHz:

Site: AC1	Time: 2019/11/06 - 17:38
Limit: FCC_Part15.209_RSE(3m)	Engineer: Dillon Diao
Probe: VULB 9168 _20-2000MHz	Polarity: Horizontal
EUT: Batterypack	Power: AC 120V/60Hz
Worst Case Mode: Transmit by Bluetooth LE at Channel 2440MHz	

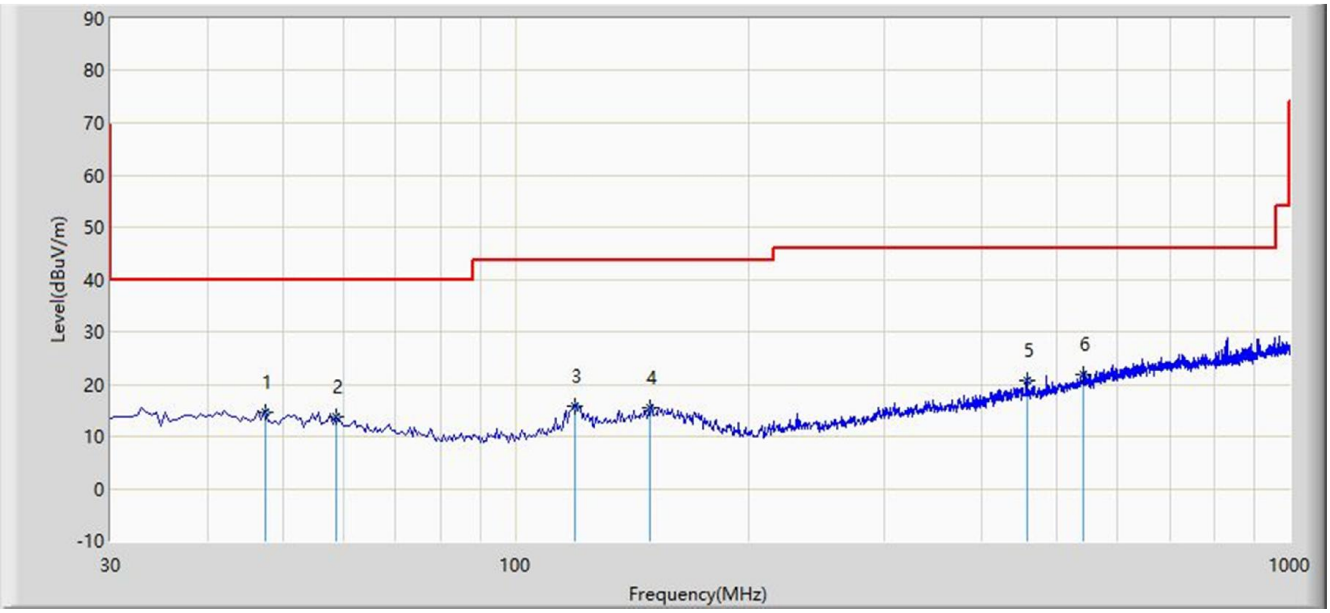

No	Flag	Mark	Frequency (MHz)	Measure Level (dBuV/m)	Reading Level (dBuV)	Margin (dB)	Limit (dBuV/m)	Factor (dB)	Type
1			47.460	14.606	0.325	-25.394	40.000	14.281	QP
2			58.625	13.736	0.111	-26.264	40.000	13.625	QP
3			119.240	15.787	2.541	-27.713	43.500	13.246	QP
4			149.458	15.553	0.214	-27.947	43.500	15.339	QP
5			457.540	20.583	2.412	-25.417	46.000	18.171	QP
6		*	540.705	22.012	2.320	-23.988	46.000	19.692	QP

Note 1: Measure Level (dBμV/m) = Reading Level (dBμV) + Factor (dB)

Factor (dB) = Cable Loss (dB) + Antenna Factor (dB/m)

Note 2: The test trace is same as the ambient noise and the amplitude of the emissions are attenuated more than 20dB below the permissible (the test frequency range: 9kHz ~ 30MHz, 18GHz ~ 25GHz), therefore no data appear in the report.

Site: AC1	Time: 2019/11/06 - 17:38
Limit: FCC_Part15.209_RSE(3m)	Engineer: Dillon Diao
Probe: VULB 9168 _20-2000MHz	Polarity: Vertical
EUT: Batterypack	Power: AC 120V/60Hz
Worst Case Mode: Transmit by Bluetooth LE at Channel 2440MHz	

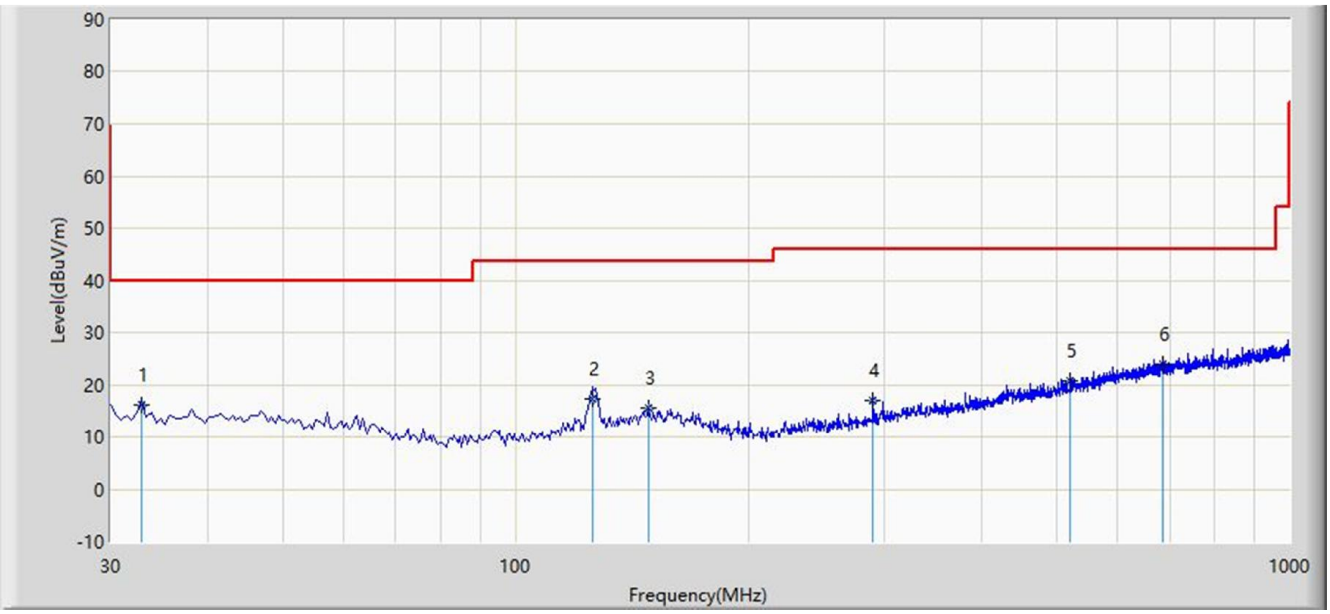

No	Flag	Mark	Frequency (MHz)	Measure Level (dBuV/m)	Reading Level (dBuV)	Margin (dB)	Limit (dBuV/m)	Factor (dB)	Type
1			32.925	16.109	2.210	-23.891	40.000	13.899	QP
2			126.032	17.267	3.568	-26.233	43.500	13.699	QP
3			148.327	15.398	0.121	-28.102	43.500	15.277	QP
4			289.650	16.890	2.626	-29.110	46.000	14.264	QP
5			521.326	20.862	1.563	-25.138	46.000	19.299	QP
6		*	687.175	23.906	1.625	-22.094	46.000	22.280	QP

Note 1: Measure Level (dBμV/m) = Reading Level (dBμV) + Factor (dB)

Factor (dB) = Cable Loss (dB) + Antenna Factor (dB/m)

Note 2: The test trace is same as the ambient noise and the amplitude of the emissions are attenuated more than 20dB below the permissible (the test frequency range: 9kHz ~ 30MHz, 18GHz ~ 25GHz), therefore no data appear in the report.

7.8. Radiated Restricted Band Edge Measurement

7.8.1.Test Limit

For 15.205 requirement:

Radiated emissions which fall in the restricted bands, as defined in Section 15.205(a) of FCC part 15, must also comply with the radiated emission limits specified in Section 15.209(a).

Frequency (MHz)	Frequency (MHz)	Frequency (MHz)	Frequency (GHz)
0.090 - 0.110	16.42-16.423	399.9 - 410	4.5-5.15
[1] 0.495 - 0.505	16.69475-16.69525	608 - 614	5.35-5.46
2.1735-2.1905	16.80425-16.80475	960 - 1240	7.25-7.75
4.125-4.128	25.5 -25.67	1300 - 1427	8.025 - 8.5
4.17725-4.17775	37.5-38.25	1435-1626.5	9.0-9.2
4.20725-4.20775	73-74.6	1645.5-1646.5	9.3-9.5
6.215-6.218	74.8-75.2	1660 - 1710	10.6-12.7
6.26775-6.26825	108-121.94	1718.8-1722.2	13.25-13.4
6.31175-6.31225	123 - 138	2200 - 2300	14.47-14.5
8.291-8.294	149.9-150.05	2310–2390	15.35-16.2
8.362-8.366	156.52475-156.52525	2483.5 - 2500	17.7-21.4
8.37625-8.38675	156.7-156.9	2690 - 2900	22.01-23.12
8.41425-8.41475	162.0125-167.17	3260 - 3267	23.6-24.0
12.29-12.293	167.72-173.2	3332 - 3339	31.2-31.8
12.51975-12.52025	240 - 285	3345.8 - 3358	36.43-36.5
12.57675-12.57725	322-335.4	3600 - 4400	([2])
13.36-13.41	--	--	--

All out of band emissions appearing in a restricted band as specified in Section 15.205 of the Title 47CFR must not exceed the limits shown in Table per Section 15.209.

FCC Part 15 Subpart C Paragraph 15.209		
Frequency [MHz]	Field Strength [uV/m]	Measured Distance [Meters]
0.009 - 0.490	2400/F (kHz)	300
0.490 - 1.705	24000/F (kHz)	30
1.705 - 30	30	30
30 - 88	100	3
88 - 216	150	3
216 - 960	200	3
Above 960	500	3

For RSS-Gen Section 8.10 requirement:

Radiated emissions which fall in the restricted bands, as defined in Section 8.10 of RSS-Gen, must also comply with the radiated emission limits specified in Section 8.9.

Frequency (MHz)	Frequency (MHz)	Frequency (GHz)
0.009 - 0.110	149.9 - 150.05	9.0 - 9.2
0.495 - 0.505	156.52475 - 156.525225	9.3 - 9.5
2.1735 - 2.1905	156.7 - 156.9	10.6 - 12.7
3.020 - 3.026	162.0125 - 167.17	13.25 - 13.4
4.125-4.128	167.72 - 173.2	14.47 - 14.5
4.17725-4.17775	240 - 285	15.35 - 16.2
4.20725-4.20775	322 - 335.4	17.7 - 21.4
5.677 - 5.683	399.9 - 410	22.01 - 23.12
6.215 - 6.218	608 - 614	23.6 - 24.0
6.26775 - 6.26825	960 - 1427	31.2 - 31.8
6.31175 - 6.31225	1435 - 1626.5	36.43 - 36.5
8.291 - 8.294	1645.5 - 1646.5	Above 38.6
8.362 - 8.366	1660 - 1710	--
8.37625 - 8.38675	1718.8 -1722.2	
8.41425 - 8.41475	2200 - 2300	
12.29 - 12.293	2310 -2390	
12.51975 - 12.52025	2483.5 -2500	
12.57675 - 12.57725	2655 - 2900	
13.36 -13.41	3260 - 3267	
16.42 - 16.423	3332 -3339	
16.69475 - 16.69525	3345.8 - 3358	
16.80425 - 16.80475	3500 - 4400	
25.5 - 25.67	4500 - 5150	
37.5 - 38.25	5350 - 5460	
73 - 74.6	7250 - 7750	
74.8 - 75.2	8025 - 8500	
108 - 138		

All out of band emissions appearing in a restricted band as specified in Section 8.10of the RSS-Gen must not exceed the limits shown in Table per Section 8.9.

RSS-Gen Section 8.9		
Frequency [MHz]	Field Strength [uV/m]	Measured Distance [Meters]
0.009 - 0.490	2400/F (kHz)	300
0.490 - 1.705	24000/F (kHz)	30
1.705 - 30	30	30
30 - 88	100	3
88 - 216	150	3
216 - 960	200	3
Above 960	500	3

7.8.2.Test Procedure Used

ANSI C63.10 - Section 6.3 (General Requirements)

ANSI C63.10 - Section 6.6 (Standard test method above 1GHz)

7.8.3.Test Setting

Peak Field Strength Measurements

1. Analyzer center frequency was set to the frequency of the radiated spurious emission of interest
2. RBW = 1MHz
3. VBW = 3MHz
4. Detector = peak
5. Sweep time = auto couple
6. Trace mode = max hold
7. Trace was allowed to stabilize

Average Field Strength Measurements

1. Analyzer center frequency was set to the frequency of the radiated spurious emission of interest
2. RBW = 1MHz
3. VBW≥ 1/T
4. De As an alternative, the instrument may be set to linear detector mode. Ensure that video filtering is applied in linear voltage domain (rather than in a log or dB domain). Some instruments require linear display mode in order to accomplish this. Others have a setting for Average-VBW Type, which can be set to “Voltage” regardless of the display mode
5. Detector = Peak
6. Sweep time = auto
7. Trace mode = max hold
8. Allow max hold to run for at least 50 times (1/duty cycle) traces

7.8.4.Test Setup

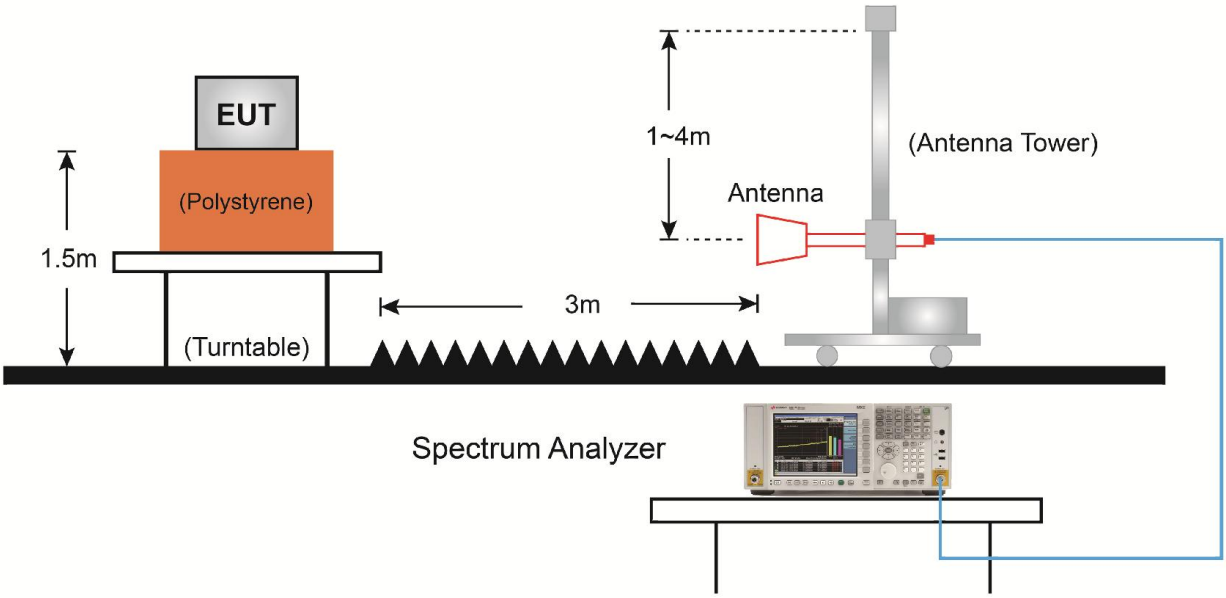

7.8.5.Test Result

Site: AC1	Time: 2019/10/31 - 08:12
Limit: FCC_Part15.209_RE(3m)	Engineer: Bacon Dong
Probe: BBHA9120D_1-18GHz	Polarity: Horizontal
EUT: Batterypack	Power: AC 120V/60Hz
Test Mode: Transmit by BLE at Channel 2402MHz	

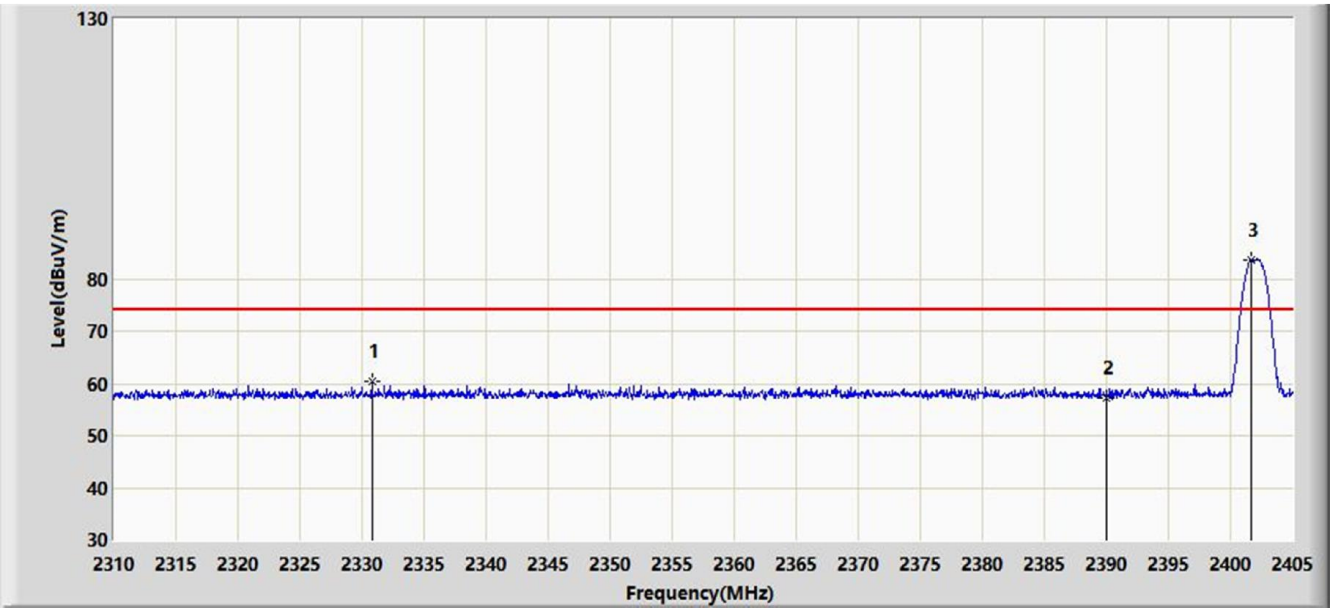

No	Flag	Mark	Frequency (MHz)	Measure Level (dBuV/m)	Reading Level (dBuV)	Margin (dB)	Limit (dBuV/m)	Factor (dB)	Type
1			2330.805	60.514	27.926	-13.486	74.000	32.589	PK
2			2390.000	57.128	24.715	-16.872	74.000	32.413	PK
3		*	2401.675	83.682	51.286	N/A	N/A	32.396	PK

Note: Measure Level (dBμV/m) = Reading Level (dBμV) + Factor (dB)

Factor (dB) = Cable Loss (dB) + Antenna Factor (dB/m)

Site: AC1	Time: 2019/10/31 - 08:14
Limit: FCC_Part15.209_RE(3m)	Engineer: Bacon Dong
Probe: BBHA9120D_1-18GHz	Polarity: Horizontal
EUT: Batterypack	Power: AC 120V/60Hz
Test Mode: Transmit by BLE at Channel 2402MHz	

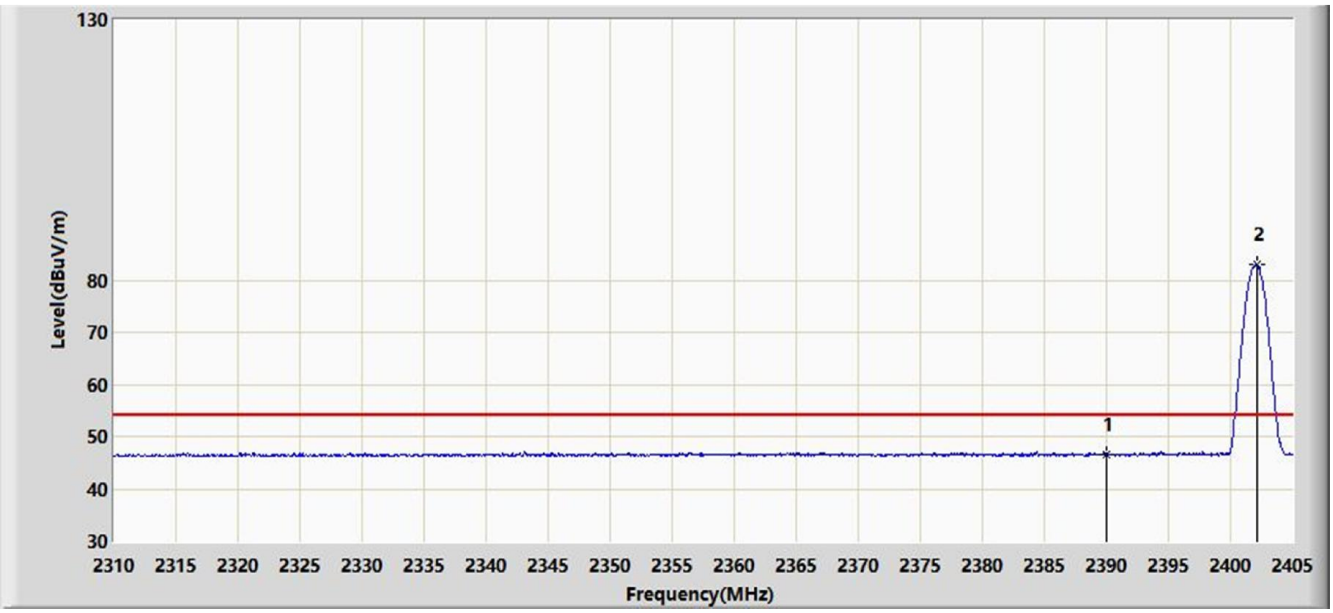

No	Flag	Mark	Frequency (MHz)	Measure Level (dBuV/m)	Reading Level (dBuV)	Margin (dB)	Limit (dBuV/m)	Factor (dB)	Type
1			2390.000	46.597	14.184	-7.403	54.000	32.413	AV
2		*	2402.150	82.971	50.575	N/A	N/A	32.396	AV

Note: Measure Level (dBμV/m) = Reading Level (dBμV) + Factor (dB)

Factor (dB) = Cable Loss (dB) + Antenna Factor (dB/m)

Site: AC1	Time: 2019/10/31 - 08:16
Limit: FCC_Part15.209_RE(3m)	Engineer: Bacon Dong
Probe: BBHA9120D_1-18GHz	Polarity: Vertical
EUT: Batterypack	Power: AC 120V/60Hz
Test Mode: Transmit by BLE at Channel 2402MHz	

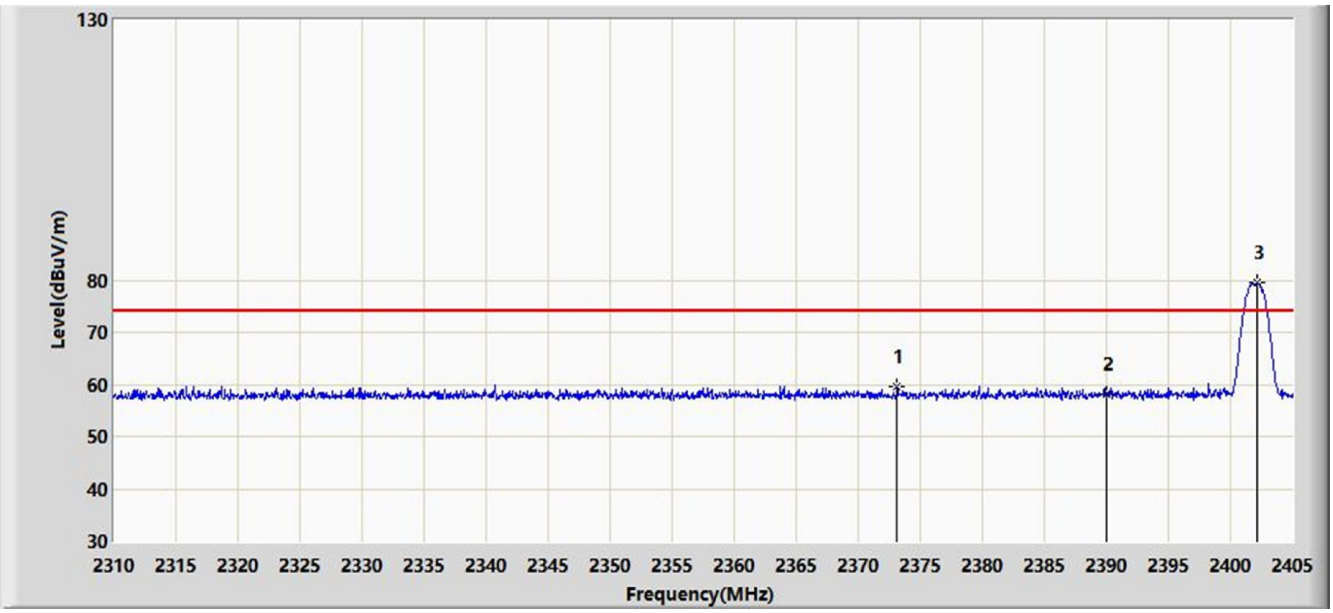

No	Flag	Mark	Frequency (MHz)	Measure Level (dBuV/m)	Reading Level (dBuV)	Margin (dB)	Limit (dBuV/m)	Factor (dB)	Type
1			2373.127	59.652	27.207	-14.348	74.000	32.446	PK
2			2390.000	58.230	25.817	-15.770	74.000	32.413	PK
3		*	2402.198	79.558	47.162	N/A	N/A	32.396	PK

Note: Measure Level (dBμV/m) = Reading Level (dBμV) + Factor (dB)

Factor (dB) = Cable Loss (dB) + Antenna Factor (dB/m)

Site: AC1	Time: 2019/10/31 - 08:16
Limit: FCC_Part15.209_RE(3m)	Engineer: Bacon Dong
Probe: BBHA9120D_1-18GHz	Polarity: Vertical
EUT: Batterypack	Power: AC 120V/60Hz
Test Mode: Transmit by BLE at Channel 2402MHz	

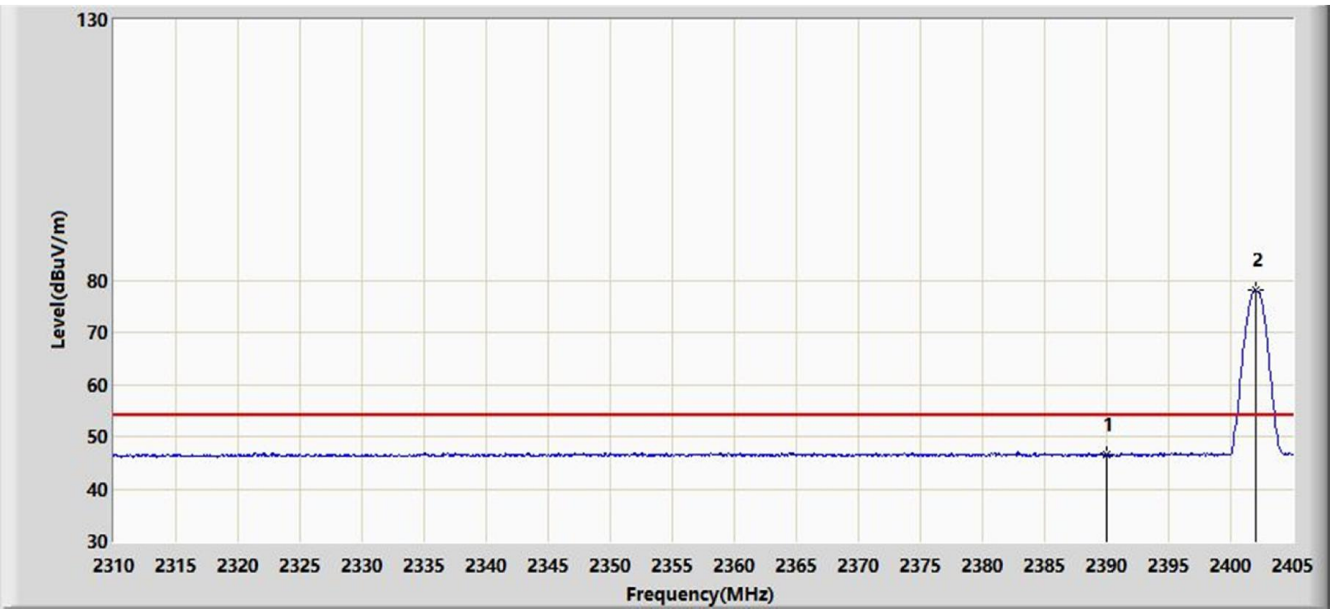

No	Flag	Mark	Frequency (MHz)	Measure Level (dBuV/m)	Reading Level (dBuV)	Margin (dB)	Limit (dBuV/m)	Factor (dB)	Type
1			2390.000	46.482	14.069	-7.518	54.000	32.413	AV
2		*	2402.008	78.157	45.761	N/A	N/A	32.396	AV

Note: Measure Level (dBμV/m) = Reading Level (dBμV) + Factor (dB)

Factor (dB) = Cable Loss (dB) + Antenna Factor (dB/m)

Site: AC1	Time: 2019/10/31 - 08:03
Limit: FCC_Part15.209_RE(3m)	Engineer: Bacon Dong
Probe: BBHA9120D_1-18GHz	Polarity: Horizontal
EUT: Batterypack	Power: AC 120V/60Hz
Test Mode: Transmit by BLE at Channel 2480MHz	

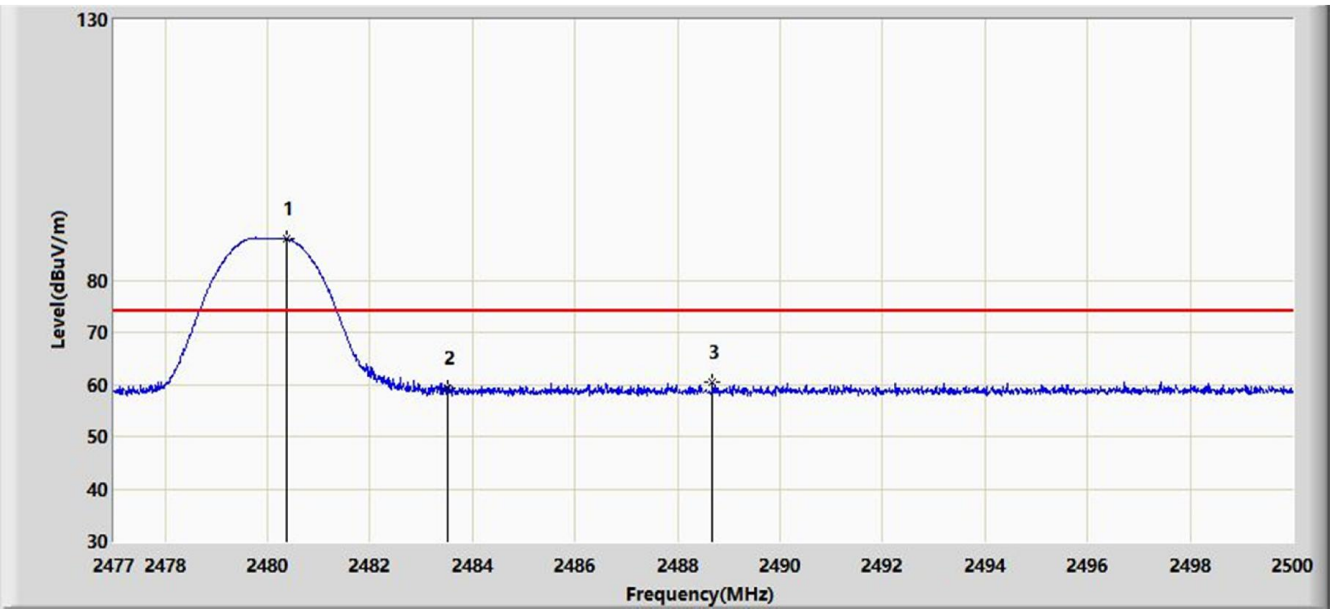

No	Flag	Mark	Frequency (MHz)	Measure Level (dBuV/m)	Reading Level (dBuV)	Margin (dB)	Limit (dBuV/m)	Factor (dB)	Type
1		*	2480.381	87.949	55.540	N/A	N/A	32.409	PK
2			2483.500	59.171	26.756	-14.829	74.000	32.416	PK
3			2488.684	60.336	27.910	-13.664	74.000	32.426	PK

Note: Measure Level (dBμV/m) = Reading Level (dBμV) + Factor (dB)

Factor (dB) = Cable Loss (dB) + Antenna Factor (dB/m)

Site: AC1	Time: 2019/10/31 - 08:07
Limit: FCC_Part15.209_RE(3m)	Engineer: Bacon Dong
Probe: BBHA9120D_1-18GHz	Polarity: Horizontal
EUT: Batterypack	Power: AC 120V/60Hz
Test Mode: Transmit by BLE at Channel 2480MHz	

No	Flag	Mark	Frequency (MHz)	Measure Level (dBuV/m)	Reading Level (dBuV)	Margin (dB)	Limit (dBuV/m)	Factor (dB)	Type
1		*	2480.174	86.398	53.989	N/A	N/A	32.409	AV
2			2483.500	47.056	14.641	-6.944	54.000	32.416	AV

Note: Measure Level (dBμV/m) = Reading Level (dBμV) + Factor (dB)

Factor (dB) = Cable Loss (dB) + Antenna Factor (dB/m)

Site: AC1	Time: 2019/10/31 - 08:09
Limit: FCC_Part15.209_RE(3m)	Engineer: Bacon Dong
Probe: BBHA9120D_1-18GHz	Polarity: Vertical
EUT: Batterypack	Power: AC 120V/60Hz
Test Mode: Transmit by BLE at Channel 2480MHz	

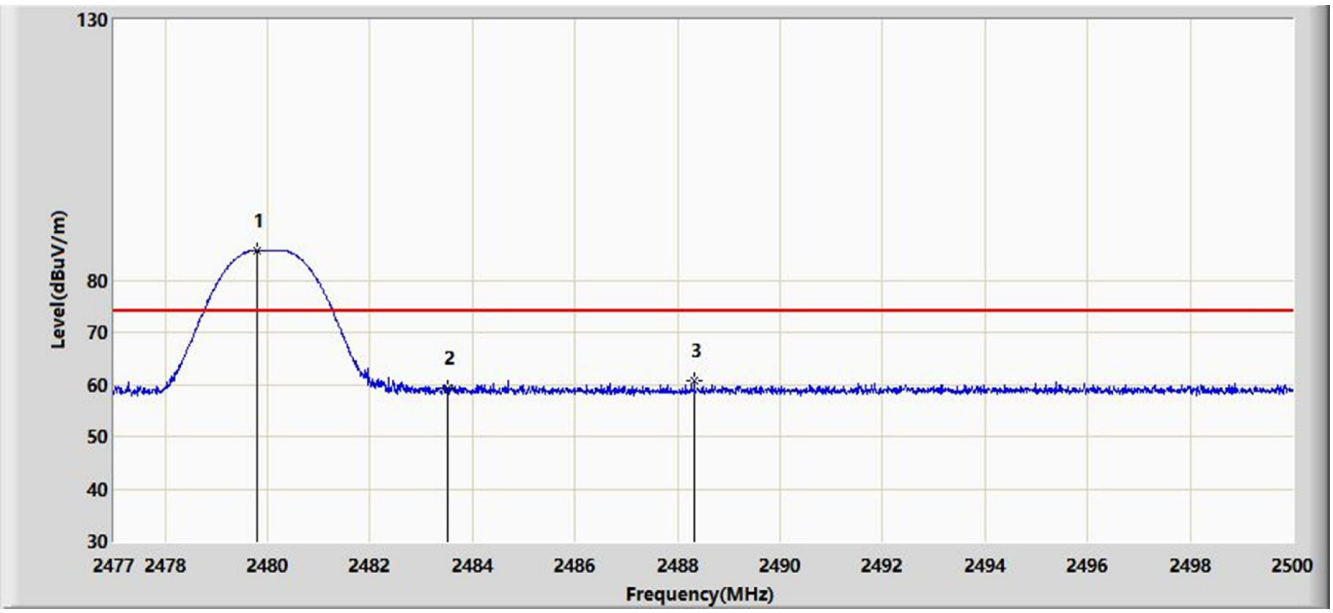

No	Flag	Mark	Frequency (MHz)	Measure Level (dBuV/m)	Reading Level (dBuV)	Margin (dB)	Limit (dBuV/m)	Factor (dB)	Type
1		*	2479.783	85.762	53.354	N/A	N/A	32.408	PK
2			2483.500	59.360	26.945	-14.640	74.000	32.416	PK
3			2488.327	60.849	28.424	-13.151	74.000	32.425	PK

Note: Measure Level (dBμV/m) = Reading Level (dBμV) + Factor (dB)

Factor (dB) = Cable Loss (dB) + Antenna Factor (dB/m)

Site: AC1	Time: 2019/10/31 - 08:10
Limit: FCC_Part15.209_RE(3m)	Engineer: Bacon Dong
Probe: BBHA9120D_1-18GHz	Polarity: Vertical
EUT: Batterypack	Power: AC 120V/60Hz
Test Mode: Transmit by BLE at Channel 2480MHz	

No	Flag	Mark	Frequency (MHz)	Measure Level (dBuV/m)	Reading Level (dBuV)	Margin (dB)	Limit (dBuV/m)	Factor (dB)	Type
1		*	2480.139	84.712	52.303	N/A	N/A	32.409	AV
2			2483.500	46.978	14.563	-7.022	54.000	32.416	AV

Note: Measure Level (dBμV/m) = Reading Level (dBμV) + Factor (dB)

Factor (dB) = Cable Loss (dB) + Antenna Factor (dB/m)

7.9. AC Conducted Emissions Measurement

7.9.1.TestLimit

FCC Part 15 Subpart C Paragraph 15.207 &RSS-Gen Issue 5 Section 8.8 Limits		
Frequency (MHz)	QP (dBμV)	Average (dBμV)
0.15 - 0.50	66 - 56	56 - 46
0.50 - 5.0	56	46
5.0 - 30	60	50
Note 1: The lower limit shall apply at the transition frequencies. Note 2: The limit decreases linearly with the logarithm of the frequency in the range 0.15MHz to 0.5MHz.		

7.9.2.Test Setup

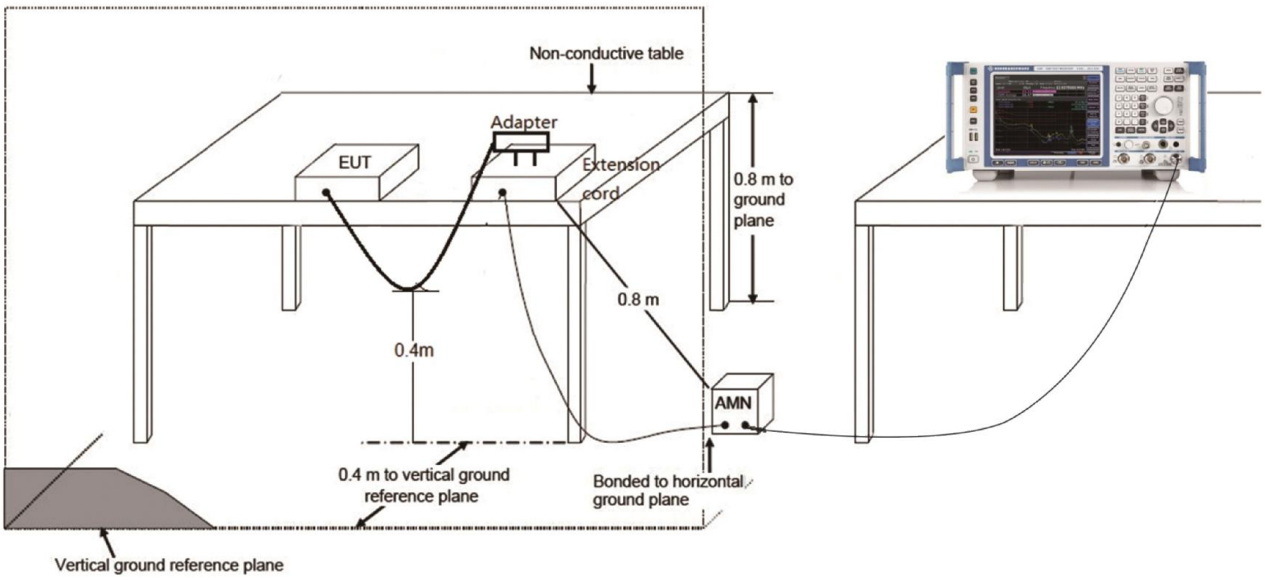

7.9.3.Test Result

Site: SR2	Time: 2019/11/05 - 17:47
Limit: FCC_Part15.207_CE_AC Power	Engineer: Liz Yuan
Probe: ENV216_101683_Filter On	Polarity: Line
EUT: Batterypack	Power: AC 120V/60Hz
Worst Case Mode: Transmit by Bluetooth LE at Channel 2440MHz	

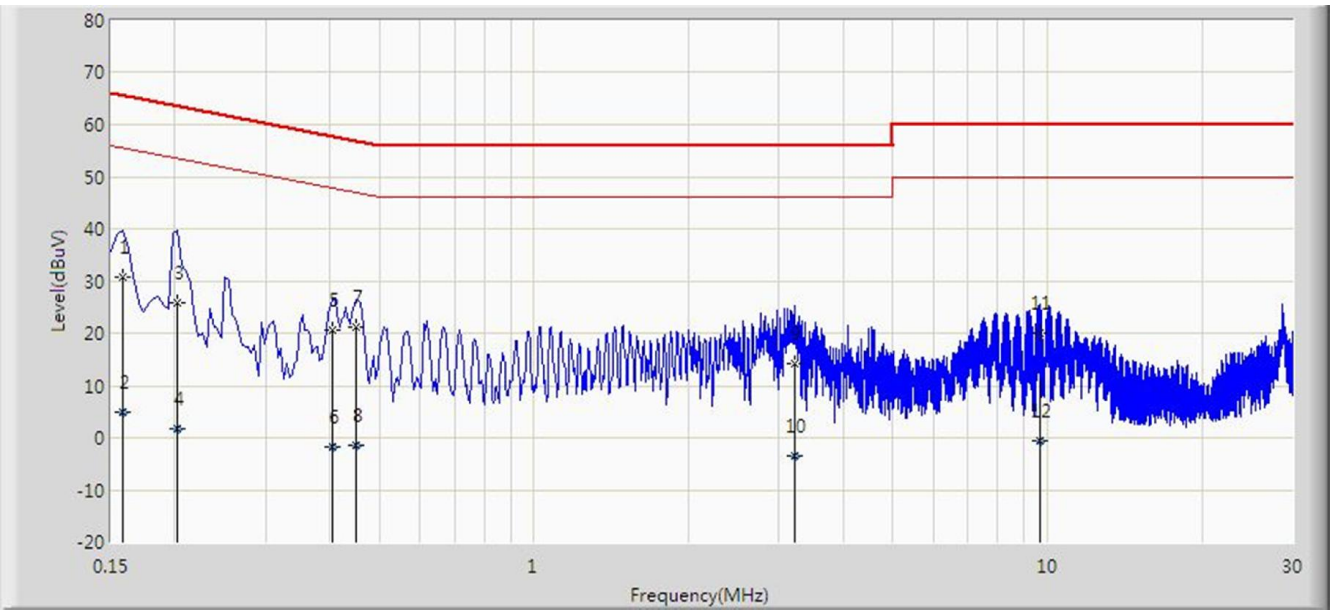

No	Flag	Mark	Frequency (MHz)	Measure Level (dBuV)	Reading Level (dBuV)	Margin (dB)	Limit (dBuV)	Factor (dB)	Type
1		*	0.158	30.749	20.438	-34.819	65.568	10.311	QP
2			0.158	4.909	-5.402	-50.659	55.568	10.311	AV
3			0.202	25.909	15.916	-37.619	63.528	9.993	QP
4			0.202	1.806	-8.187	-51.722	53.528	9.993	AV
5			0.406	20.583	10.493	-37.146	57.730	10.090	QP
6			0.406	-1.805	-11.895	-49.534	47.730	10.090	AV
7			0.450	21.126	11.000	-35.749	56.875	10.126	QP
8			0.450	-1.564	-11.691	-48.440	46.875	10.126	AV
9			3.226	14.323	4.450	-41.677	56.000	9.873	QP
10			3.226	-3.581	-13.454	-49.581	46.000	9.873	AV
11			9.650	20.077	9.917	-39.923	60.000	10.160	QP
12			9.650	-0.587	-10.747	-50.587	50.000	10.160	AV

Note: Measure Level (dBμV) = Reading Level (dBμV) + Factor (dB)

Factor (dB) = Cable Loss (dB) + LISN Factor (dB)

Site: SR2	Time: 2019/11/05 - 17:57
Limit: FCC_Part15.207_CE_AC Power	Engineer: Liz Yuan
Probe: ENV216_101683_Filter On	Polarity: Neutral
EUT: BatteryPack	Power: AC 120V/60Hz
Worst Case Mode: Transmit by Bluetooth LE at Channel 2440MHz	

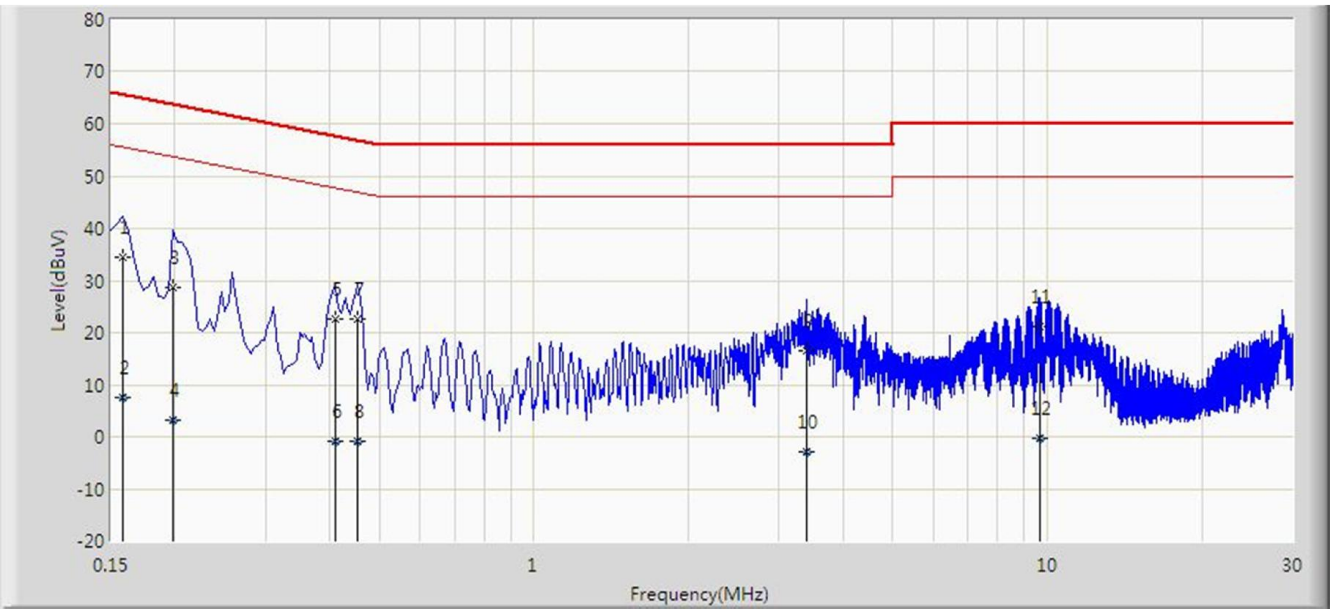

No	Flag	Mark	Frequency (MHz)	Measure Level (dBuV)	Reading Level (dBuV)	Over Limit (dB)	Limit (dBuV)	Factor (dB)	Type
1		*	0.158	34.535	24.245	-31.034	65.568	10.290	QP
2			0.158	7.448	-2.841	-48.120	55.568	10.290	AV
3			0.198	28.558	18.544	-35.136	63.694	10.015	QP
4			0.198	3.227	-6.788	-50.467	53.694	10.015	AV
5			0.410	22.656	12.537	-34.992	57.648	10.119	QP
6			0.410	-0.740	-10.860	-48.388	47.648	10.119	AV
7			0.454	22.701	12.548	-34.101	56.802	10.153	QP
8			0.454	-0.737	-10.890	-47.538	46.802	10.153	AV
9			3.386	16.571	6.666	-39.429	56.000	9.904	QP
10			3.386	-2.845	-12.750	-48.845	46.000	9.904	AV
11			9.654	21.139	10.961	-38.861	60.000	10.178	QP
12			9.654	-0.168	-10.346	-50.168	50.000	10.178	AV

Note: Measure Level (dBμV) = Reading Level (dBμV) + Factor (dB)

Factor (dB) = Cable Loss (dB) + LISN Factor (dB)

8. CONCLUSION

The data collected relate only the item(s) tested and show that the device is in compliance with Part 15C of the FCC rules and ISED rules.

The End

Appendix A - Test Setup Photograph

Refer to “1909WSU012-UT” file.

Appendix B-EUT Photograph

Refer to “1909WSU012-UE” file.