TEST REPORT

of

FCC Part 15 Subpart C §15.247

FCC ID : WEK-SL-01M

Equipment Under Test	:	SHUTTER LINE MASTER
Model Name	:	SL-01M (Alt. : MA-01, SB-01M, SD-01M, SJ-01M)
Applicant	:	Semilink Inc.
Manufacturer	:	Semilink Inc.
Date of Test(s)	:	2015.01.29 ~ 2015.02.03
Date of Issue	:	2015.02.17

In the configuration tested, the EUT complied with the standards specified above.

Tested By: **Date:** **2015.02.17**

Youngmin Park

Approved By: **Date:** **2015.02.17**

Hyunchae You

The results shown in this test report refer only to the sample(s) tested unless otherwise stated. This test report cannot be reproduced, except in full, without prior written permission of the Company.

INDEX

Table of Contents Page

1. General Information ---------- 3

2. Transmitter Radiated Spurious Emissions and Conducted Spurious Emission ------ 7

3. 20 dB Bandwidth ---------- 21

4. Maximum Peak Output Power ---------- 24

5. Carrier Frequency Separation ---------- 26

6. Number of Hopping Frequencies ---------- 28

7. Time of Occupancy(Dwell Time) ---------- 31

8. Antenna Requirement ---------- 38

The results shown in this test report refer only to the sample(s) tested unless otherwise stated. This test report cannot be reproduced, except in full, without prior written permission of the Company.

1. General Information

1.1. Testing Laboratory

SGS Korea Co., Ltd. (Gunpo Laboratory)
- Wireless Div. 2FL, 10-2, LS-ro 182beon-gil, Gunpo-si, Gyeonggi-do, Korea, 435-837

All SGS services are rendered in accordance with the applicable SGS conditions of service available on request and accessible at http://www.sgs.com/en/Terms-and-Conditions.aspx.

Telephone : +82 31 688 0901
FAX : +82 31 688 0921

1.2. Details of Applicant

Applicant : Semilink Inc.
Address : 417, 415, Heungan-daero, Dongan-gu, Anyang-si, Gyeonggi-do
Contact Person : Park, Chang-Sik
Phone No. : +82 31 440 9330

1.3. Description of EUT

Kind of Product	SHUTTER LINE MASTER
Model Name	SL-01M (Alt. : MA-01, SB-01M, SD-01M, SJ-01M)
Power Supply	DC 3 V (Lithium type of battery)
Frequency Range	2 402 ㎒ ~ 2 480 ㎒
Modulation Technique	GFSK
Number of Channels	79 Channels
Antenna Type	PCB antenna
Antenna Gain	-1.90 ㏈i

1.4. Declaration by the manufacturer

- Adaptive Frequency Hopping is supported and use at least 20 channels.
- The modulation type of this Bluetooth device is only GFSK.

The results shown in this test report refer only to the sample(s) tested unless otherwise stated. This test report cannot be reproduced, except in full, without prior written permission of the Company.

1.5. Information about the FHSS characteristics:

1.5.1. Pseudorandom Frequency Hopping Sequence

The channel is represented by a pseudo-random hopping sequence hopping through the 79 RF channels. The hopping sequence is unique for the piconet and is determined by the Bluetooth device address of the master; the phase in the hopping sequence is determined by the Bluetooth clock of the master. The channel is divided into time slots where each slot corresponds to an RF hop frequency. Consecutive hops correspond to different RF hop frequencies. The nominal hop rate is 1 600 hops/s.

1.5.2. Equal Hopping Frequency Use

The channels of this system will be used equally over the long-term distribution of the hopsets.

1.5.3. Example of a 79 hopping sequence in data mode:

02, 05, 31, 24, 20, 10, 43, 36, 30, 23, 40, 06, 21, 50, 44, 09, 71, 78, 01, 13, 73, 07, 70, 72, 35, 62, 42, 11, 41, 08, 16, 29, 60, 15, 34, 61, 58, 04, 67, 12, 22, 53, 57, 18, 27, 76, 39, 32, 17, 77, 52, 33, 56, 46, 37, 47, 64, 49, 45, 38, 69, 14, 51, 26, 79, 19, 28, 65, 75, 54, 48, 03, 25, 66, 05, 16, 68, 74, 59, 63, 55

1.5.4. System Receiver Input Bandwidth

Each channel bandwidth is 1 ㎒.

The system receivers have input bandwidths that match the hopping channel bandwidths of their corresponding transmitters and shift frequencies in synchronization with the transmitted signals.

1.5.5. Equipment Description

15.247(a)(1) that the rx input bandwidths shift frequencies in synchronization with the transmitted

15.247(g): In accordance with the Bluetooth Industry Standard, the system is designed to comply with all of the regulations in Section 15.247 when the transmitter is presented with a continuous data (or information) system.

15.247(h): In accordance with the Bluetooth Industry Standard, the system does not coordinate it channels selection/ hopping sequence with other frequency hopping systems for the express purpose of avoiding the simultaneous occupancy of individual hopping frequencies by multiple transmitters.

1.6. Alternative models

Model name	Information
SL-01M	-Basic model
MA-01	-Same to basic model, but it is different external
SB-01M	-Same to basic model, but it is different external
SD-01M	-Same to basic model, but it is different external
SJ-01M	-Same to basic model, but it is different external

- Refer to external photos for detailed difference between basic and alternative model.

The results shown in this test report refer only to the sample(s) tested unless otherwise stated. This test report cannot be reproduced, except in full, without prior written permission of the Company.

1.7. Test Equipment List

Equipment	Manufacturer	Model	S/N	Cal Date	Cal Interval	Cal Due.
Signal Generator	R&S	SMR40	100272	Jul. 18, 2014	Annual	Jul. 18, 2015
Signal Generator	R&S	SMJ 100A	100882	Jun. 25, 2014	Annual	Jun. 25, 2015
Spectrum Analyzer	Agilent	N9030A	US51350132	Aug. 24, 2014	Annual	Aug. 24, 2015
Spectrum Analyzer	R&S	FSV30	100768	Mar. 27, 2014	Annual	Mar. 27, 2015
Directional Coupler	KRYTAR	152613	162412	Nov. 04, 2014	Annual	Nov. 04, 2015
Bluetooth Tester	TESCOM	TC-3000C	3000C000142	Dec. 11, 2014	Annual	Dec. 11, 2015
High Pass Filter	Wainwright Instrument GmbH	WHK3.0/18G-10SS	344	Jun. 10, 2014	Annual	Jun. 10, 2015
High Pass Filter	Wainwright Instrument GmbH	WHNX7.5/26.5G-6SS	15	Jul. 02, 2014	Annual	Jul. 02, 2015
Low Pass Filter	Mini-Circuits	NLP-1200+	V9500401023-2	Jul. 01, 2014	Annual	Jul. 01, 2015
Power Sensor	R&S	NRP-Z81	100669	Mar. 19, 2014	Annual	Mar. 19, 2015
DC power Supply	Agilent	U8002A	MY49030063	Dec. 06, 2014	Annual	Dec. 06, 2015
Preamplifier	H.P.	8447F	2944A03909	Aug. 27, 2014	Annual	Aug. 27, 2015
Preamplifier	R&S	SCU-18	10117	Dec. 16, 2014	Annual	Dec. 16, 2015
Preamplifier	MITEQ Inc.	JS44-18004000-35-8P	1546891	Apr. 28, 2014	Annual	Apr. 28, 2015
Test Receiver	R&S	ESU26	100109	Mar. 04, 2014	Annual	Mar. 04, 2015
Bilog Antenna	SCHWARZBECK MESS-ELEKTRONIK	VULB9163	396	Jun. 07, 2013	Biennial	Jun. 07, 2015
Horn Antenna	SCHWARZBECK MESS-ELEKTRONIK	BBHA9170	BBHA9170223	Sep. 01, 2014	Biennial	Sep. 01, 2016
Horn Antenna	R&S	HF906	100326	Dec. 10, 2013	Biennial	Dec. 10, 2015
Loop Antenna	SCHWARZBECK	FMZB 1519	1519-039	Jul. 09, 2013	Biennial	Jul. 09, 2015
Antenna Master	INN-CO	MM4000	N/A	N/A	N/A	N.C.R.
Turn Table	INN-CO	DS 1200 S	N/A	N/A	N/A	N.C.R.
Anechoic Chamber	SY Corporation	L × W × H (9.6 m × 6.4 m × 6.6 m)	N/A	N/A	N/A	N.C.R.

The results shown in this test report refer only to the sample(s) tested unless otherwise stated. This test report cannot be reproduced, except in full, without prior written permission of the Company.

1.8. Summary of Test Results

The EUT has been tested according to the following specifications:

APPLIED STANDARD : FCC Part15 subpart C		
Standard Section	**Test Item**	**Result**
15.205(a) 15.209 15.247(d)	Transmitter Radiated Spurious Emissions Conducted Spurious Emission	Complied
15.247(a)(1)	20 dB Bandwidth	Complied
15.247(b)(1)	Maximum Peak Output Power	Complied
15.247(a)(1)	Carrier Frequency Separation	Complied
15.247(a)(1)(iii)	Number of Hopping Frequencies	Complied
15.247(a)(1)(iii)	Time of Occupancy (Dwell Time)	Complied

1.9. Sample calculation

Where relevant, the following sample calculation is provided:

1.9.1. Conducted test

Offset value (dB) = Directional Coupler(dB) + Cable loss (dB)

1.9.2. Radiation test

Field strength level (dBμV/m) = Measured level (dBμV) + Antenna factor (dB) + Cable loss (dB) – amplifier gain (dB)

1.10. Test report revision

Revision	Report number	Date of Issue	Description
0	F690501/RF-RTL008375	2015.02.04	Initial
1	F690501/RF-RTL008375-1	2015.02.17	Added definition of DUT for three orthogonal planes

The results shown in this test report refer only to the sample(s) tested unless otherwise stated. This test report cannot be reproduced, except in full, without prior written permission of the Company.

2. Transmitter Radiated Spurious Emissions and Conducted Spurious Emission

2.1. Test Setup

2.1.1. Transmitter Radiated Spurious Emissions

The diagram below shows the test setup that is utilized to make the measurements for emission from below 30 ㎒ Emissions.

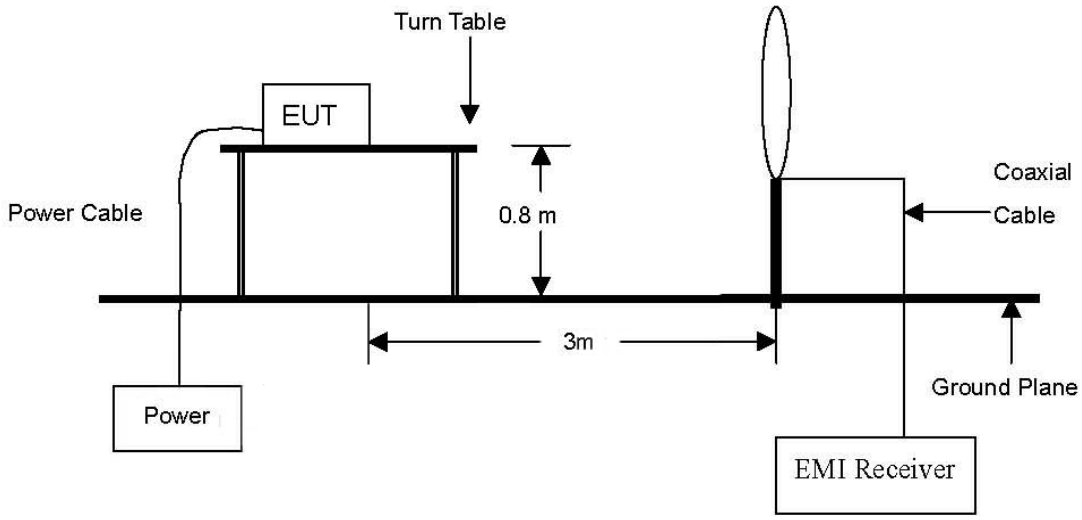

The diagram below shows the test setup that is utilized to make the measurements for emission from 30 ㎒ to 1 ㎓ Emissions.

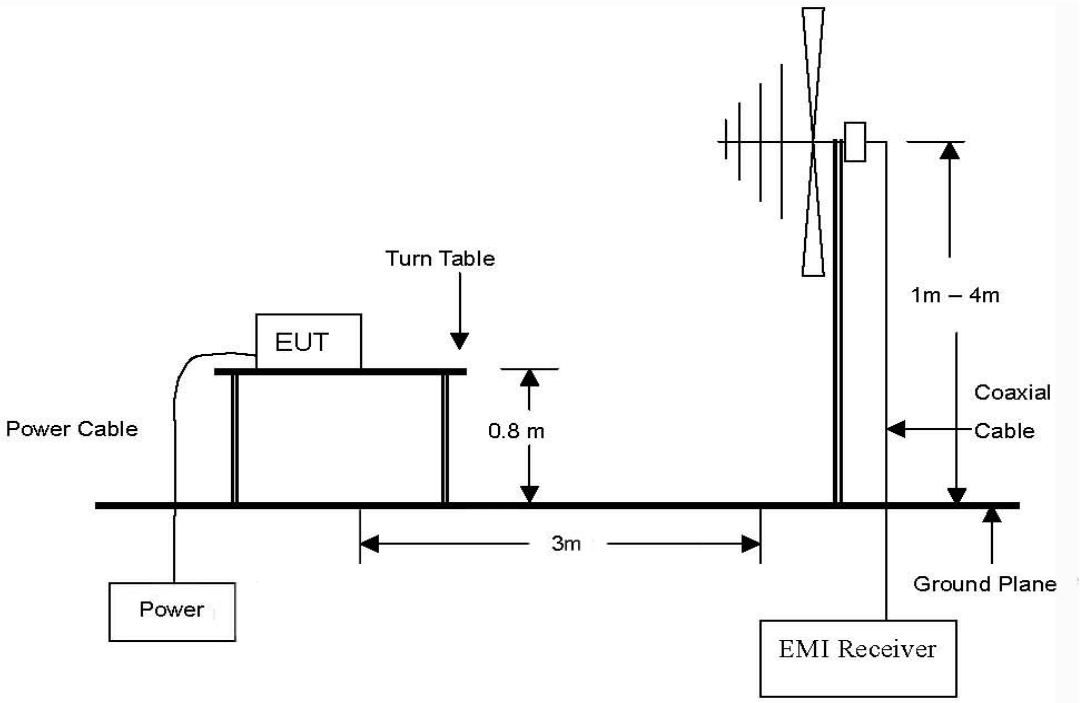

The diagram below shows the test setup that is utilized to make the measurements for emission .The spurious emissions were investigated form 1 ㎓ to the 10th harmonic of the highest fundamental frequency or 40 ㎓, whichever is lower.

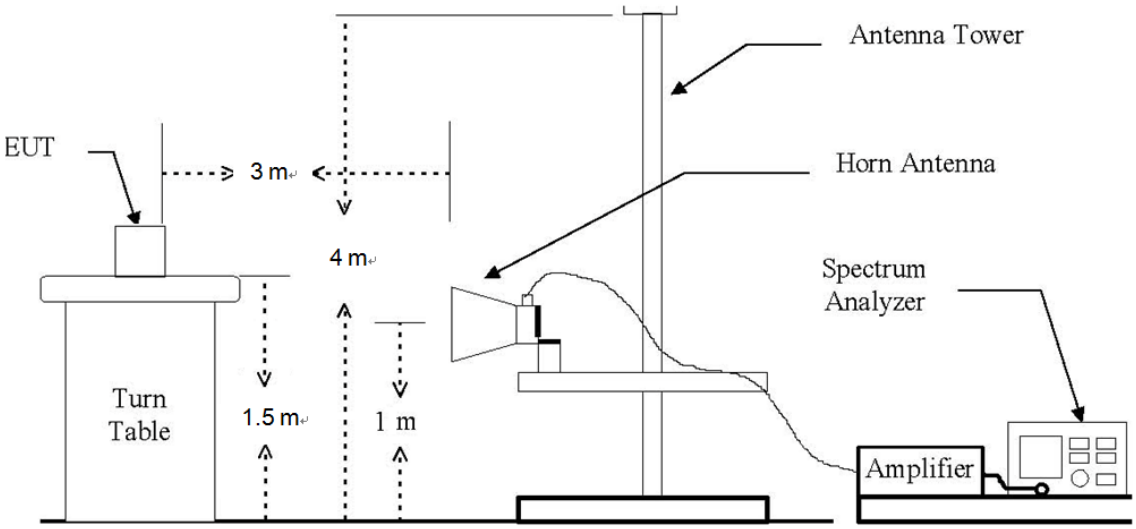

2.1.2. Conducted Spurious Emissions

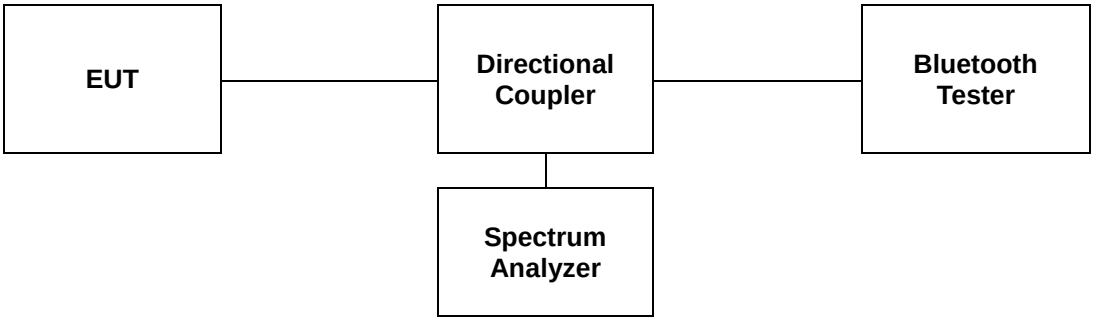

2.2. Limit

According to §15.247(d), in any 100 ㎑ bandwidth outside the frequency band in which the spread spectrum or digitally modulated intentional radiator is operating, the radio frequency power that is produced by the intentional radiator shall be at least 20 ㏈ below that in the 100 ㎑ bandwidth within the band that contains the highest level of the desired power, based on either an RF conducted or a radiated measurement, provided the transmitter demonstrates compliance with the peak conducted power limits. If the transmitter complies with the conducted power limits based on the use of RMS averaging over a time interval, as permitted under paragraph(b)(3) of this section, the attenuation required under this paragraph shall be 30 ㏈ instead of 20 ㏈. Attenuation below the general limits specified in section §15.209(a) is not required. In addition, radiated emission which in the restricted band, as define in section §15.205(a), must also comply the radiated emission limits specified in section §15.209(a) (see section §15.205(c))

According to § 15.209(a), Except as provided elsewhere in this Subpart, the emissions from an intentional radiator shall not exceed the field strength levels specified in the following table：

Frequency (㎒)	Distance (Meters)	Field Strength (㏈㎶/m)	Field Strength (㎶/m)
0.009 – 0.490	300	20 log (2 400/F(㎑))	2 400/F(㎑)
0.490 – 1.705	30	20 log (24 000/F(㎑))	24 000/F(㎑)
1.705 – 30.0	30	29.54	30
30 - 88	3	40.0	100
88 – 216	3	43.5	150
216 – 960	3	46.0	200
Above 960	3	54.0	500

The results shown in this test report refer only to the sample(s) tested unless otherwise stated. This test report cannot be reproduced, except in full, without prior written permission of the Company.

2.3. Test Procedures

Radiated emissions from the EUT were measured according to the dictates of DA000705, ANSI C63.10-2013

2.3.1. Test Procedures for emission below 30 ㎒

1. The EUT was placed on the top of a rotating table 0.8 meters above the ground at a 3 meter anechoic chamber test site. The table was rotated 360 degrees to determine the position of the highest radiation.
2. Then antenna is a loop antenna is fixed at one meter above the ground to determine the maximum value of the field strength. Both parallel and perpendicular of the antenna are set to make the measurement.
3. For each suspected emission, the EUT was arranged to its worst case and then the table was turned from 0 degrees to 360 degrees to find the maximum reading.
4. The test-receiver system was set to average or quasi peak detect function and Specified Bandwidth with Maximum Hold Mode.

2.3.2. Test Procedures for emission above 30 ㎒

1. The EUT was placed on the top of a rotating table 0.8 meters above the ground for below 1 000 ㎓ and 1.5 meters above the ground for above 1 ㎓ at a 3 meter anechoic chamber test site. The table was rotated 360 degrees to determine the position of the highest radiation.
2. During performing radiated emission below 1 ㎓, the EUT was set 3 meters away from the interference receiving antenna, which was mounted on the top of a variable-height antenna tower. During performing radiated emission above 1 ㎓, the EUT was set 3 meter away from the interference-receiving antenna.
3. The antenna is a bi-log antenna, a horn antenna and its height is varied from one meter to four meters above the ground to determine the maximum value of the field strength. Both horizontal and vertical polarizations of the antenna are set to make the measurement.
4. For each suspected emission, the EUT was arranged to its worst case and then the antenna was tuned to heights from 1 meter to 4 meters and the table was turned from 0 degrees to 360 degrees to find the maximum reading.
5. The test-receiver system was set to Peak Detect Function and Specified Bandwidth with Maximum Hold Mode.
6. If the emission level of the EUT in peak mode was 10 ㏈ lower than the limit specified, then testing could be stopped and the peak values of the EUT would be reported. Otherwise the emissions that did not have 10 ㏈ margin would be re-tested one

NOTE;

1. The resolution bandwidth and video bandwidth of test receiver/spectrum analyzer is 120 ㎑ for Peak detection (PK) and Quasi-peak detection (QP) at frequency below 1 ㎓.
2. The resolution bandwidth and video bandwidth of test receiver/spectrum analyzer is 1 ㎒ for Peak detection and frequency above 1 ㎓.
3. The resolution bandwidth of test receiver/spectrum analyzer is 1 ㎒ and the video bandwidth is 1/T ㎐ for Average detection (AV) at frequency above 1 ㎓.
   VBW = 360 ㎐ ≥ 1/T ㎐, Where T is the bluetooth pulse width in seconds(T = 0.002 9 s).
   Refer to the DH5 of time of occupancy (dwell time) test item.
4. When Average result is different from peak result over 20 ㏈ (over-averaging), According to 15.35 (c), as a “duty cycle correction factor”, pulse averaging with 20 log (duty cycle) has to be used.
5. To get a maximum emission level from the EUT, the EUT was moved throughout the X-axis, Y-axis and Z-axis. Worst case is Y-axis.
   Definition of DUT for three orthogonal planes is described in the test setup photo.

The results shown in this test report refer only to the sample(s) tested unless otherwise stated. This test report cannot be reproduced, except in full, without prior written permission of the Company.

2.3.2. Test Procedures for Conducted Spurious Emissions

2.3.2.1. Band-edge Compliance of RF Conducted Emissions

The transmitter output was connected to the spectrum analyzer.
Span = wide enough to capture the peak level of the emission operating on the channel closest to the bandedge, as well as any modulation products which fall outside of the authorized band of operation.

RBW ≥ 100 ㎑

VBW ≥ RBW

Sweep = auto
Detector function = peak
Trace = max hold

2.3.2.2. Spurious RF Conducted Emissions

The transmitter output was connected to the spectrum analyzer.
RBW = 100 ㎑

VBW ≥ RBW

Sweep = auto
Detector function = peak
Trace = max hold

The results shown in this test report refer only to the sample(s) tested unless otherwise stated. This test report cannot be reproduced, except in full, without prior written permission of the Company.

2.4. Test Results

Ambient temperature : (23 ± 1) ℃
Relative humidity : 47 % R.H.

2.4.1. Spurious Radiated Emission

The frequency spectrum from 24 ㎒ to 1 000 ㎒ was investigated. All reading values are peak values.

Radiated Emissions			Ant	Correction Factors		Total	FCC Limit	
Frequency (㎒)	Reading (dBμV)	Detect Mode	Pol.	AF (dB/m)	AMP + CL (dB)	Actual (dBμV/m)	Limit (dBμV/m)	Margin (dB)
408.02	33.22	Peak	H	17.22	-25.03	25.41	46.00	20.59
432.02	33.31	Peak	H	17.44	-25.13	25.62	46.00	20.38
474.22	28.37	Peak	V	17.96	-25.28	21.05	46.00	24.95
588.44	28.22	Peak	V	19.25	-24.93	22.54	46.00	23.46
623.56	28.69	Peak	V	20.04	-25.00	23.73	46.00	22.27
799.01	29.30	Peak	H	21.20	-24.18	26.32	46.00	19.68
Above 800.00	Not detected	-	-	-	-	-	-	-

Remark:

1. Spurious emissions for all channels were investigated and almost the same below 1 ㎓.
2. Reported spurious emissions are in **BDR / DH5 / Middle channel** as worst case among other channels.
3. Radiated spurious emission measurement as below
   (Actual = Reading + Antenna Factor + Amp + CL)
4. The device has a reference clock operating 24 ㎒.

The results shown in this test report refer only to the sample(s) tested unless otherwise stated. This test report cannot be reproduced, except in full, without prior written permission of the Company.

2.4.2. Spurious Radiated Emission

The frequency spectrum above 1 000 ㎒ was investigated.

Operating Mode : GFSK (1 Mbps)

A. Low Channel (2 402 ㎒)

Fundamental Level			Ant.	Correction Factors		Total
Frequency (㎒)	Reading (dBμV)	Detect Mode	Pol.	AF (dB/m)	CL (dB)	Actual (dBμV/m)
2 402.00	48.15	Peak	H	28.07	6.42	82.64

Radiated Emissions			Ant	Correction Factors		Total	FCC Limit	
Frequency (㎒)	Reading (dBμV)	Detect Mode	Pol.	AF (dB/m)	CL (dB)	Actual (dBμV/m)	Limit (dBμV/m)	Margin (dB)
*2 310.00	24.31	Peak	H	27.77	6.48	58.56	74.00	15.44
*2 310.00	15.47	Average	H	27.77	6.48	49.72	54.00	4.28
*2 318.88	26.84	Peak	H	27.86	6.38	61.08	74.00	12.92
*2 318.88	15.27	Average	H	27.86	6.38	49.51	54.00	4.49
*2 390.00	23.98	Peak	H	28.08	6.47	58.53	74.00	15.47
*2 390.00	15.64	Average	H	28.08	6.47	50.19	54.00	3.81

Radiated Emissions			Ant	Correction Factors		Total	FCC Limit	
Frequency (㎒)	Reading (dBμV)	Detect Mode	Pol.	AF (dB/m)	AMP+CL (dB)	Actual (dBμV/m)	Limit (dBμV/m)	Margin (dB)
*4 804.02	54.82	Peak	V	32.61	-33.97	53.46	74.00	20.54
*4 804.02	53.31	Average	V	32.61	-33.97	51.95	54.00	2.05
7 206.09	43.63	Peak	V	35.79	-32.08	47.34	62.64	15.30
9 608.52	42.26	Peak	V	37.56	-29.35	50.47	62.64	12.17
*12 010.73	42.93	Peak	V	38.57	-27.05	54.45	74.00	19.55
*12 010.73	36.85	Average	V	38.57	-27.05	48.37	54.00	5.63
Above 12 100.00	Not detected	-	-	-	-	-	-	-

The results shown in this test report refer only to the sample(s) tested unless otherwise stated. This test report cannot be reproduced, except in full, without prior written permission of the Company.

B. Middle Channel (2 441 ㎒)

Radiated Emissions			Ant	Correction Factors		Total	FCC Limit	
Frequency (㎒)	Reading (dBμV)	Detect Mode	Pol.	AF (dB/m)	AMP+CL (dB)	Actual (dBμV/m)	Limit (dBμV/m)	Margin (dB)
*4 882.05	54.31	Peak	V	33.01	-33.72	53.60	74.00	20.40
*4 882.05	52.53	Average	V	33.01	-33.72	51.82	54.00	2.18
*7 322.56	41.98	Peak	V	36.24	-30.91	47.31	74.00	26.69
*7 322.56	35.52	Average	V	36.24	-30.91	40.85	54.00	13.15
*12 205.74	45.74	Peak	V	38.56	-28.51	55.79	74.00	18.21
*12 205.74	40.52	Average	V	38.56	-28.51	50.57	54.00	3.43
Above 12 300.00	Not detected	-	-	-	-	-	-	-

The results shown in this test report refer only to the sample(s) tested unless otherwise stated. This test report cannot be reproduced, except in full, without prior written permission of the Company.

C. High Channel (2 480 ㎒)

Radiated Emissions			Ant	Correction Factors		Total	FCC Limit	
Frequency (㎒)	Reading (dBμV)	Detect Mode	Pol.	AF (dB/m)	CL (dB)	Actual (dBμV/m)	Limit (dBμV/m)	Margin (dB)
*2 483.50	24.33	Peak	H	28.17	6.65	59.15	74.00	14.85
*2 483.50	16.13	Average	H	28.17	6.65	50.95	54.00	3.05
*2 498.38	27.03	Peak	H	28.30	6.86	62.19	74.00	11.81
*2 498.38	16.11	Average	H	28.30	6.86	51.27	54.00	2.73
*2 500.00	25.40	Peak	H	28.31	6.88	60.59	74.00	13.41
*2 500.00	16.23	Average	H	28.31	6.88	51.42	54.00	2.58

Radiated Emissions			Ant	Correction Factors		Total	FCC Limit	
Frequency (㎒)	Reading (dBμV)	Detect Mode	Pol.	AF (dB/m)	AMP+CL (dB)	Actual (dBμV/m)	Limit (dBμV/m)	Margin (dB)
*4 960.00	52.68	Peak	V	33.16	-33.56	52.28	74.00	21.72
*4 960.00	51.12	Average	V	33.16	-33.56	50.72	54.00	3.28
Above 5 000.00	Not detected	-	-	-	-	-	-	-

Remarks:
1. "*" means the restricted band.
2. Measuring frequencies from 1 ㎓ to the 10th harmonic of highest fundamental frequency.
3. Radiated emissions measured in frequency above 1 000 ㎒ were made with an instrument using peak/average detector mode if frequency was in the restricted band. Otherwise the frequency was out of restricted band, only peak detector should be used.
4. Emissions out of restricted band are limited below 20 ㏈ of fundamental level in 100 ㎑ resolution bandwidth.
5. Actual = Reading + AF + AMP + CL

The results shown in this test report refer only to the sample(s) tested unless otherwise stated. This test report cannot be reproduced, except in full, without prior written permission of the Company.

2.4.3. Spurious RF Conducted Emissions : Plot of Spurious RF Conducted Emission

Operating Mode : GFSK (1 Mbps)

Low Channel

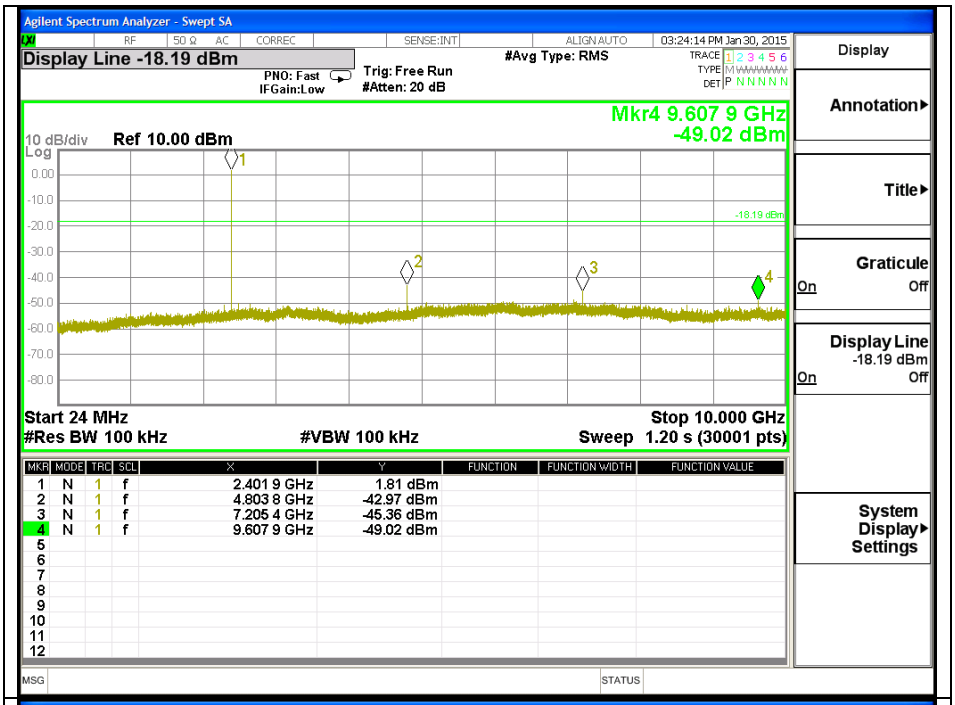

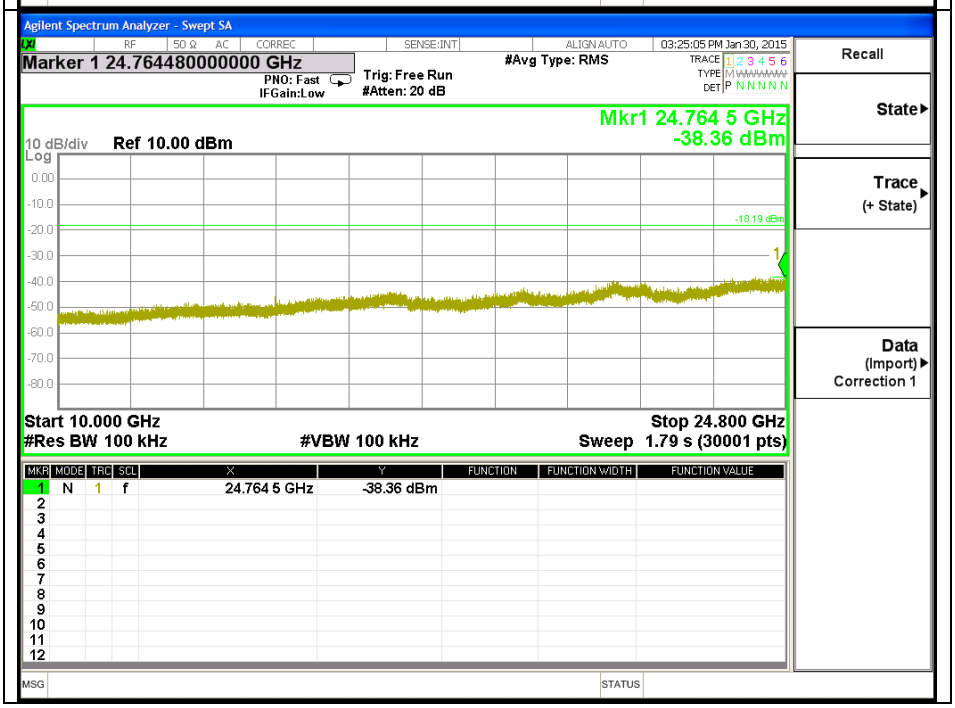

Middle Channel

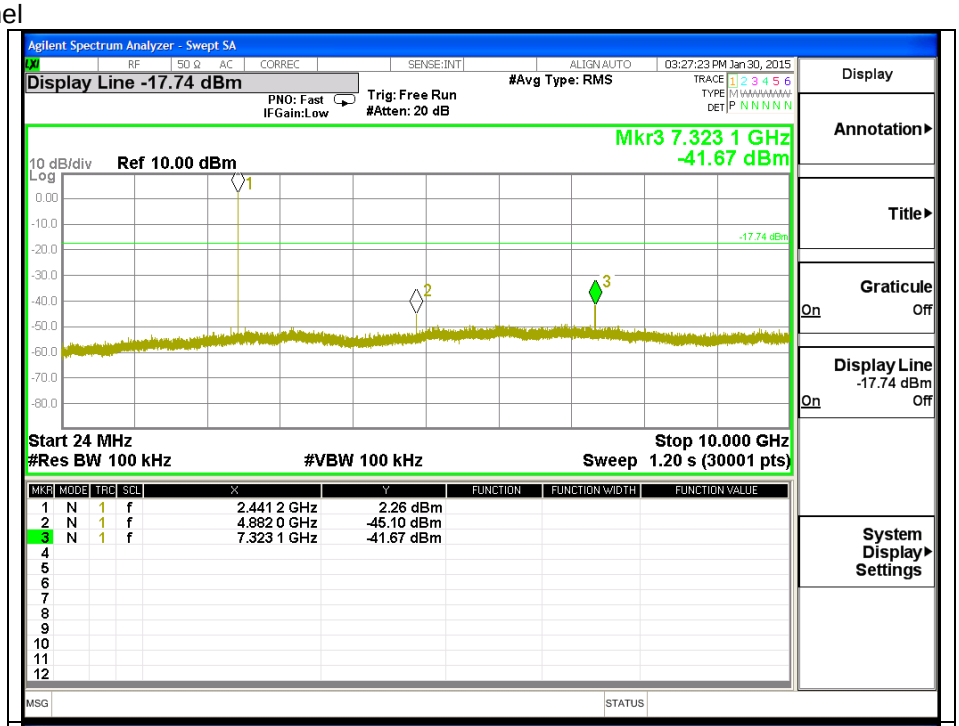

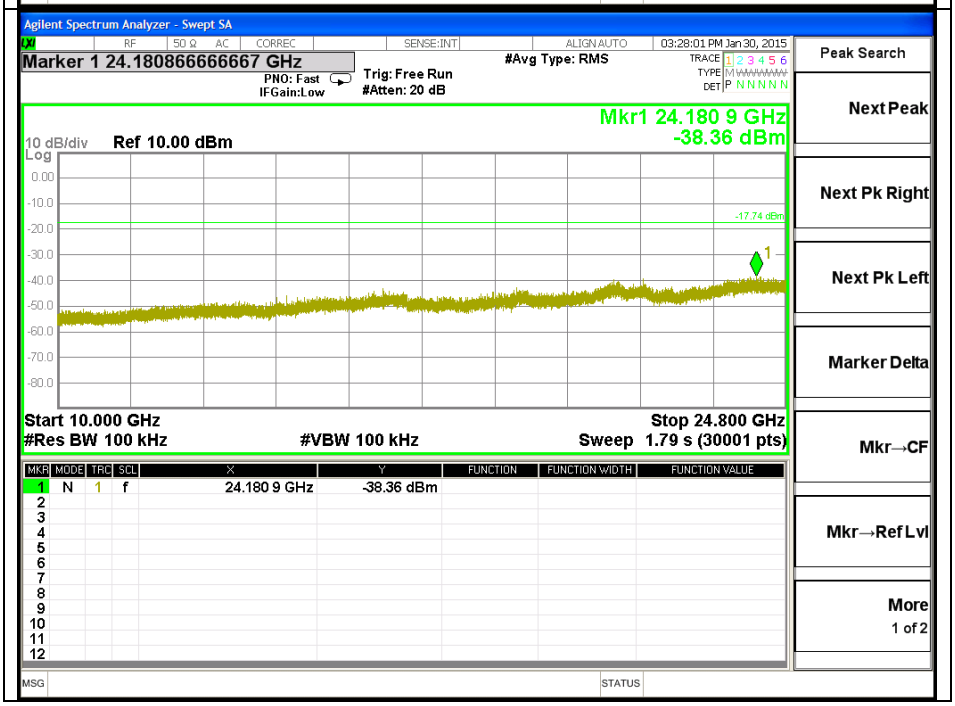

High Channel

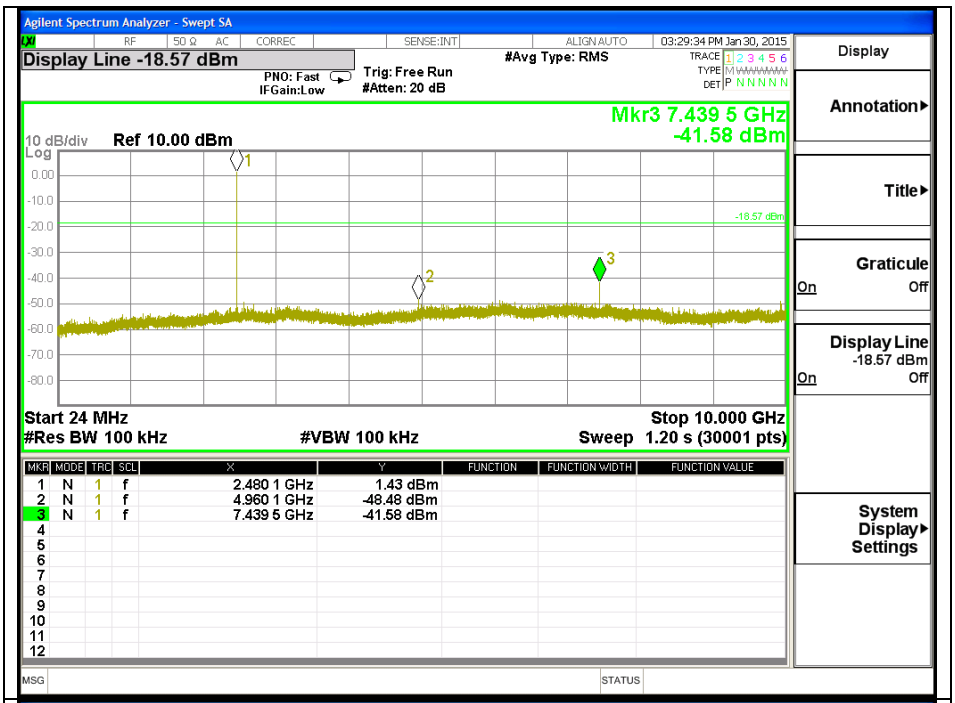

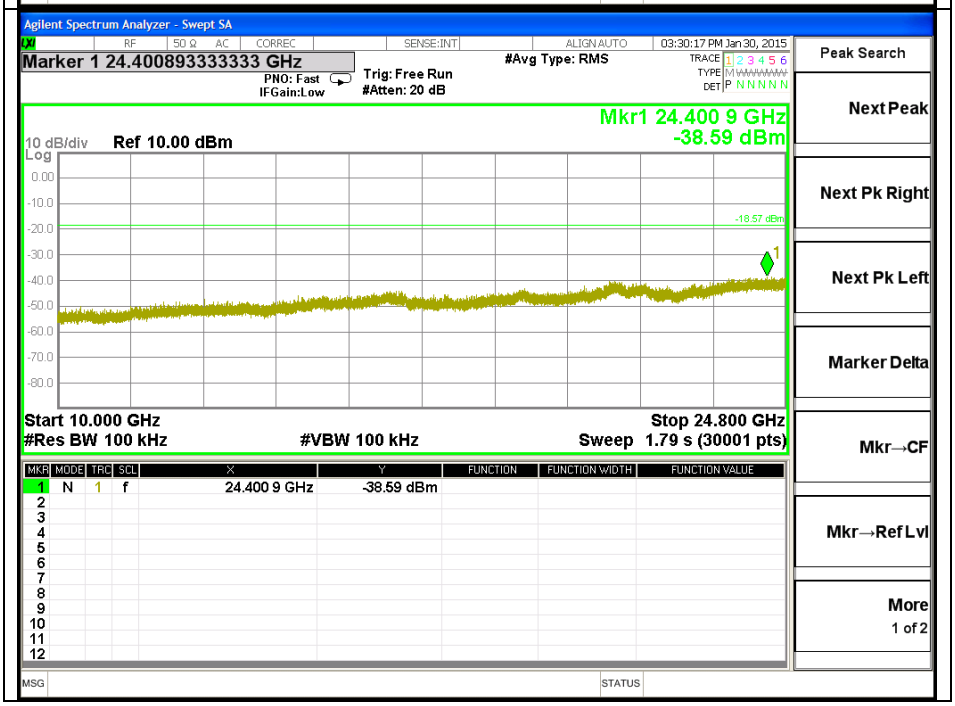

2.4.4. Band-edge Compliance of RF Conducted Emissions

Operating Mode : GFSK (1 Mbps)

Low Channel
-with the hopping disabled

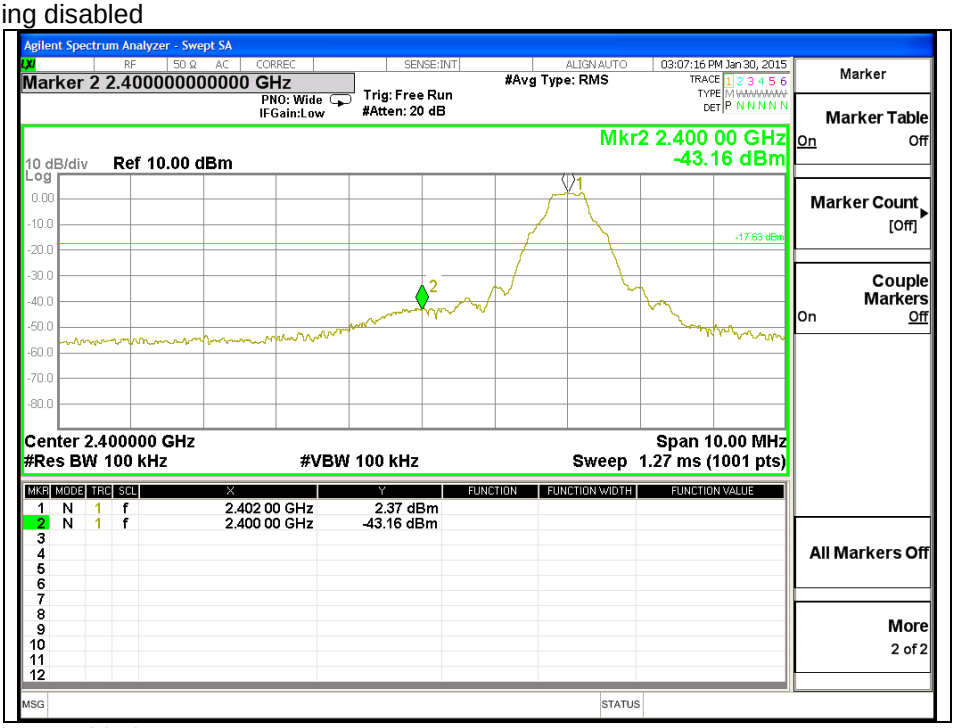

-with the hopping enabled

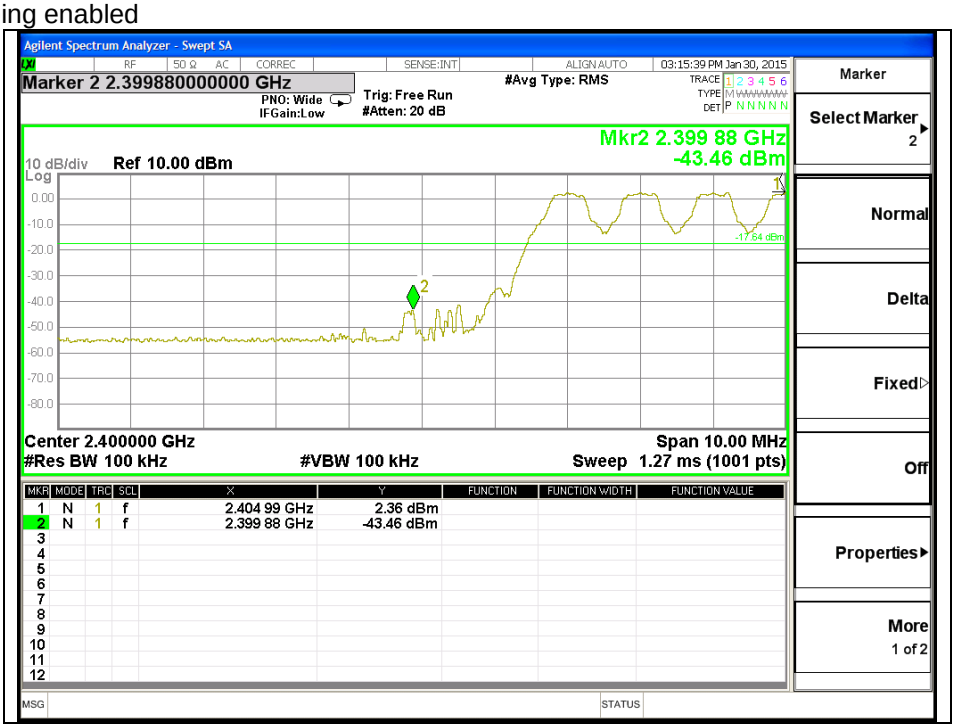

High Channel
-with the hopping disabled

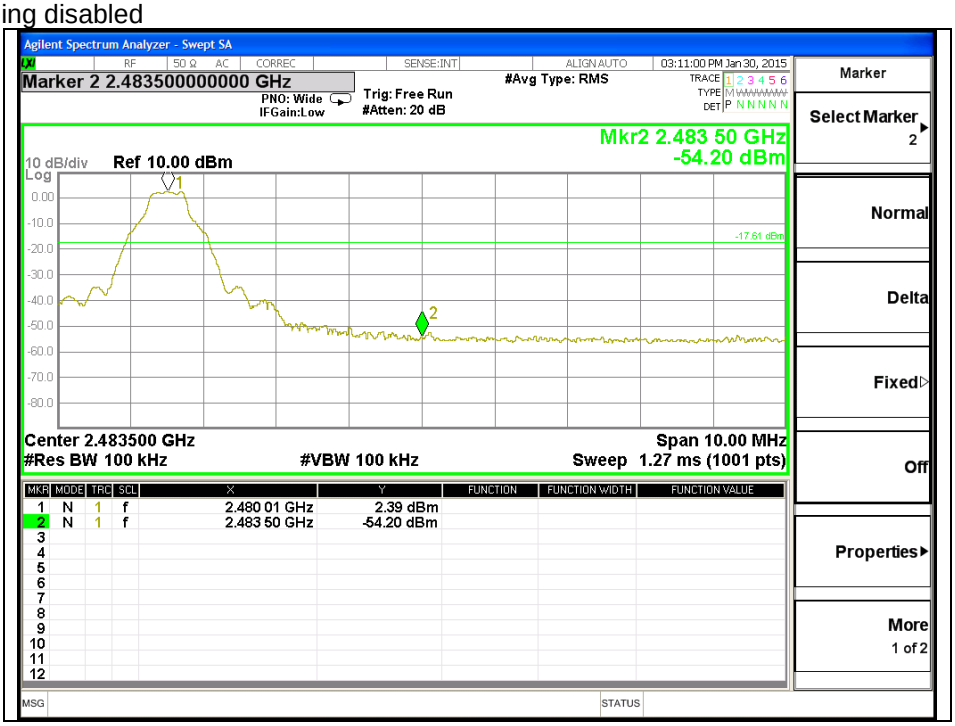

-with the hopping enabled

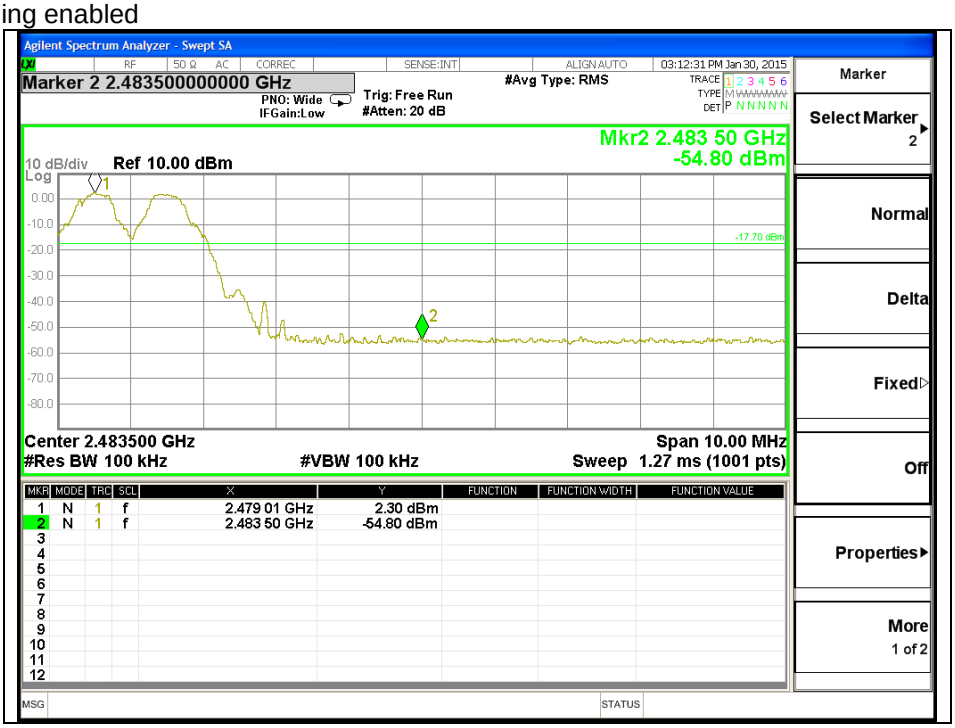

The results shown in this test report refer only to the sample(s) tested unless otherwise stated. This test report cannot be reproduced, except in full, without prior written permission of the Company.

3. 20 ㎧ Bandwidth

3.1. Test Setup

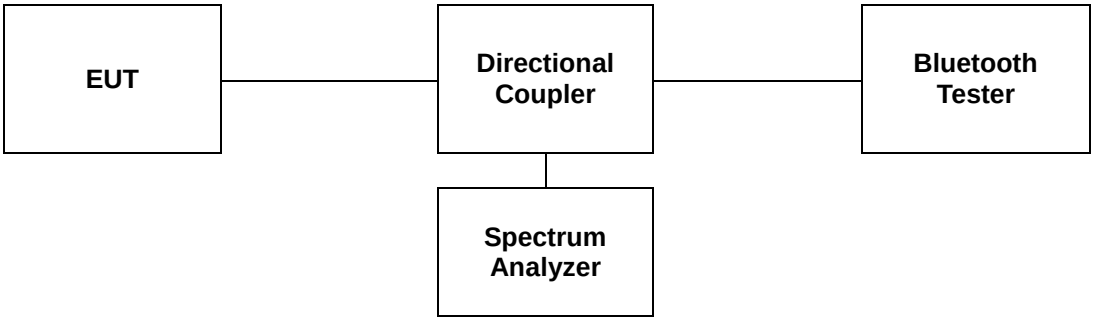

3.2. Limit

Limit: Not Applicable

3.3. Test Procedure

3.3.1. 20 ㎧ Bandwidth

The test follows DA000705
The 20 ㎧ bandwidth was measured with a spectrum analyzer connected to RF antenna connector (conducted measurement) while EUT was operating in transmit mode at the appropriate center frequency.
Use the following spectrum analyzer setting :
Span = approximately 2 to 3 times the 20 ㎧ bandwidth, centered on a hopping channel.
RBW ≥ greater than 1 % of the 20 ㎧ bandwidth
VBW ≥ RBW
Sweep = auto
Detector = peak
Trace = max hold
The marker-to-peak function to set the mark to the peak of the emission. Use the marker-delta function to measure 20 ㎧ down one side of the emission. Reset the function, and move the marker to the other side of the emission, until it is (as close as possible to) even with the reference marker level. The marker-delta reading at this point is 20 ㎧ bandwidth of the emission.

The results shown in this test report refer only to the sample(s) tested unless otherwise stated. This test report cannot be reproduced, except in full, without prior written permission of the Company.

3.4. Test Results

Ambient temperature : (23 ± 1) ℃
Relative humidity : 47 % R.H.

Operation Mode	Data Rate	Channel	Channel Frequency (㎒)	20 ㏈ Bandwidth (㎒)
GFSK	1 Mbps	Low	2 402	1.047
		Middle	2 441	1.041
		High	2 480	1.050

20 ㏈ Bandwidth

Operating Mode : GFSK
Low Channel

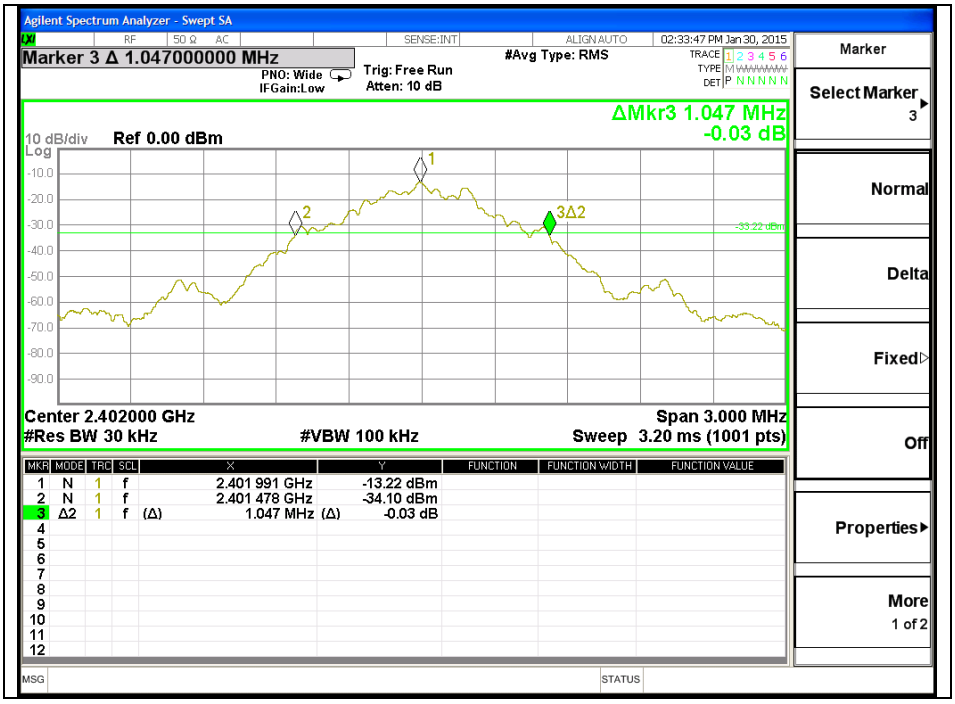

Middle Channel

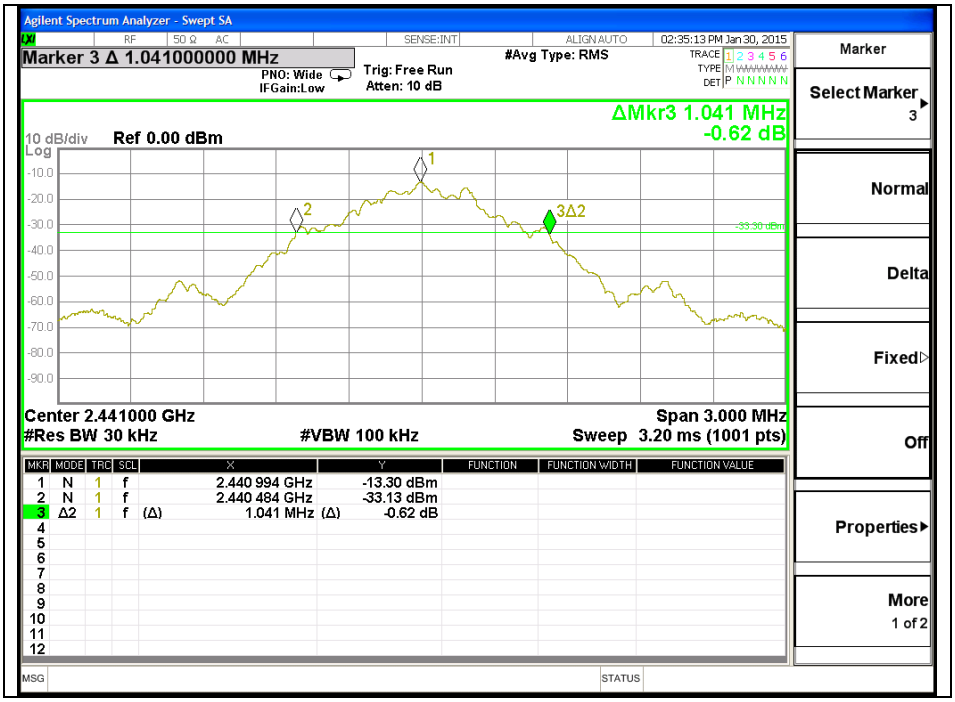

High Channel

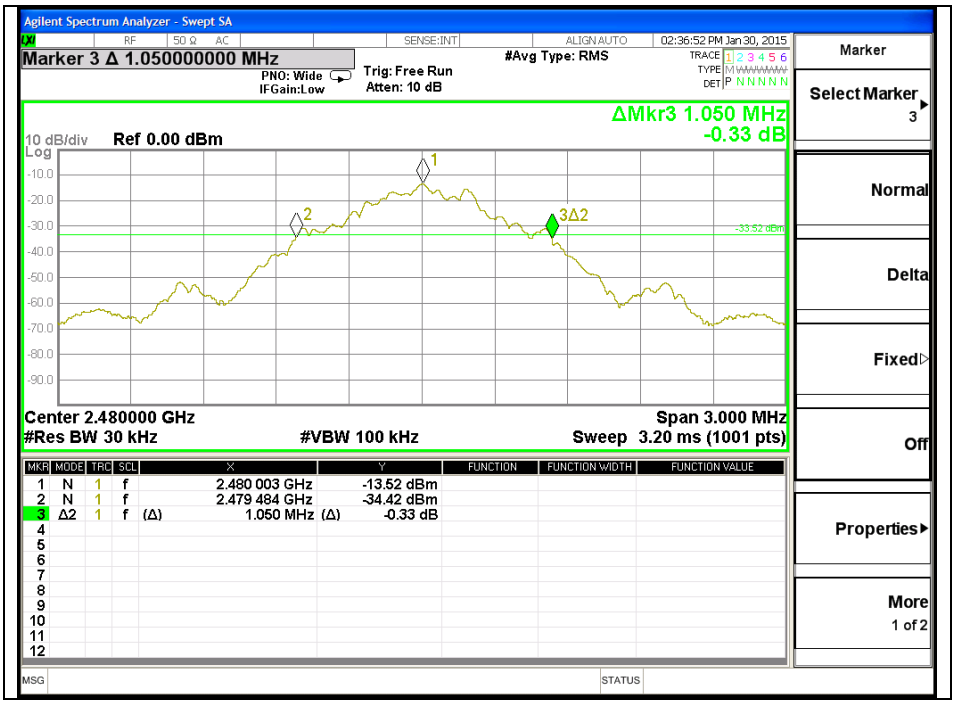

4. Maximum Peak Output Power

4.1. Test Setup

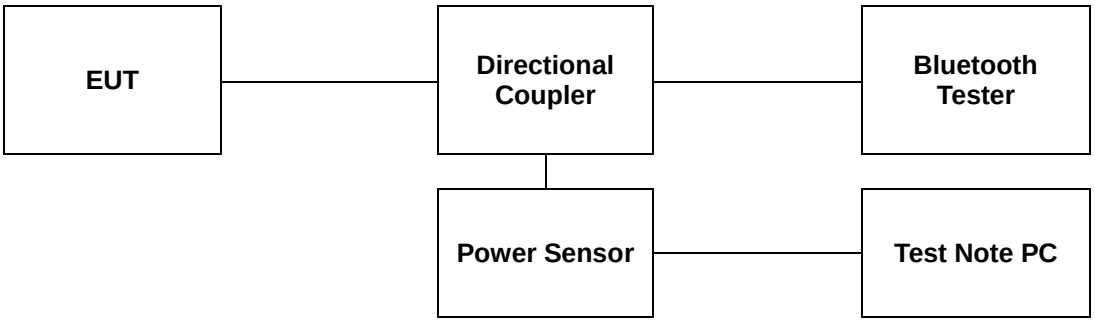

4.2. Limit

The maximum peak output power of the intentional radiator shall not exceed the following :

1. §15.247(a)(1), Frequency hopping systems shall have hopping channel carrier frequencies separated by a minimum of 25 ㎑ or the 20 ㏈ bandwidth of the hopping channel, whichever is greater, provided the systems operate with an output power no greater than 125 ㎽.
2. §15.247(b)(1), For frequency hopping systems operating in the 2 400 – 2 483.5 ㎒ employing at least 75 non-overlapping hopping channels, and all frequency hopping systems in the 5 725 – 5 805 ㎒ band: 1 Watt.

4.3. Test Procedure

The test follows DA000705. Using the power sensor instead of a spectrum analyzer.

1. Place the EUT on the table and set it in the transmitting mode.
2. Remove the antenna from the EUT and then connect a low loss RF cable from the antenna port to the Power sensor.
3. Test program : (S/W name : R&S Power Viewer, Version : 3.2.0)
4. Measure peak power each channel.

The results shown in this test report refer only to the sample(s) tested unless otherwise stated. This test report cannot be reproduced, except in full, without prior written permission of the Company.

4.4. Test Results

Ambient temperature : (23 ± 1) ℃
Relative humidity : 47 % R.H.

Operation Mode	Data Rate	Channel	Channel Frequency (MHz)	Directional Coupler + Cable offset (dB)	Peak Power Result (dB m)	Peak Power Limit (dB m)
GFSK	1 Mbps	Low	2 402	15.86	3.07	20.97
		Middle	2 441	15.87	3.11	20.97
		High	2 480	15.88	2.98	20.97

Remark:
In the case of AFH, the limit for peak power is 0.125 W

The results shown in this test report refer only to the sample(s) tested unless otherwise stated. This test report cannot be reproduced, except in full, without prior written permission of the Company.

5. Carrier Frequency Separation

5.1. Test Setup

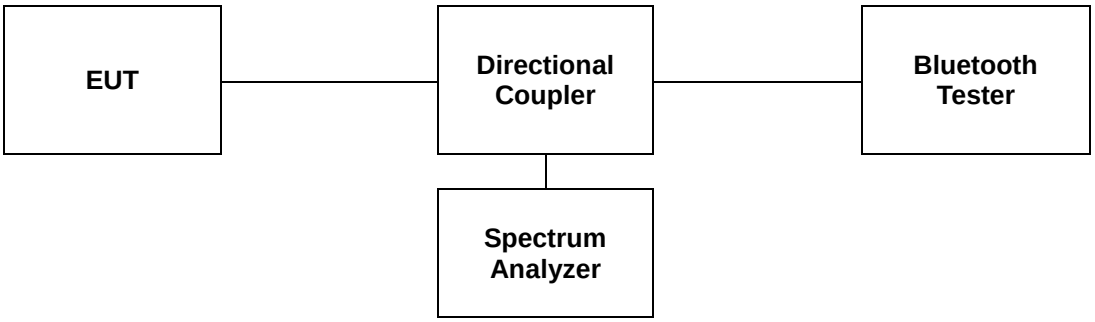

5.2. Limit

§15.247(a)(1) Frequency hopping system operating in 2 400 – 2 483.5 ㎒. Band may have hopping channel carrier frequencies that are separated by 25 ㎑ or two-third of 20 ㏈ bandwidth of the hopping channel, whichever is is greater, provided the systems operate with an output power no greater than 125 ㎽.

5.3. Test Procedure

The test follows DA000705.

The device is operating in hopping mode between 79 channels and also supporting Adaptive Frequency Hopping with hopping between 20 channels. As compared with each operating mode, 79 channels are chosen as a representative for test.
Use the following spectrum analyzer settings:

Span = wide enough to capture the peaks of two adjacent channels.
RBW ≥ 1 % of the span.
VBW ≥ RBW
Sweep = auto
Detector = peak
Trace = max hold.

Allow the trace to stabilize. Use the marker-delta function to determine the between the peaks of the adjacent channels.

The results shown in this test report refer only to the sample(s) tested unless otherwise stated. This test report cannot be reproduced, except in full, without prior written permission of the Company.

5.4. Test Results

Ambient temperature : (23 ± 1) ℃
Relative humidity : 47 % R.H.

Operation Mode	Channel (Middle)	Adjacent Hopping Channel Separation (㎑)	Two-third of 20 ㏈ Bandwidth (㎑)	Minimum Bandwidth (㎑)
GFSK	2 441 ㎒	1 000	694	25

Note;
Measurement is made with EUT operating in hopping mode between 79 channels providing a worse case scenario as compared to AFH mode hopping between 20 channels.

Operating Mode: GFSK

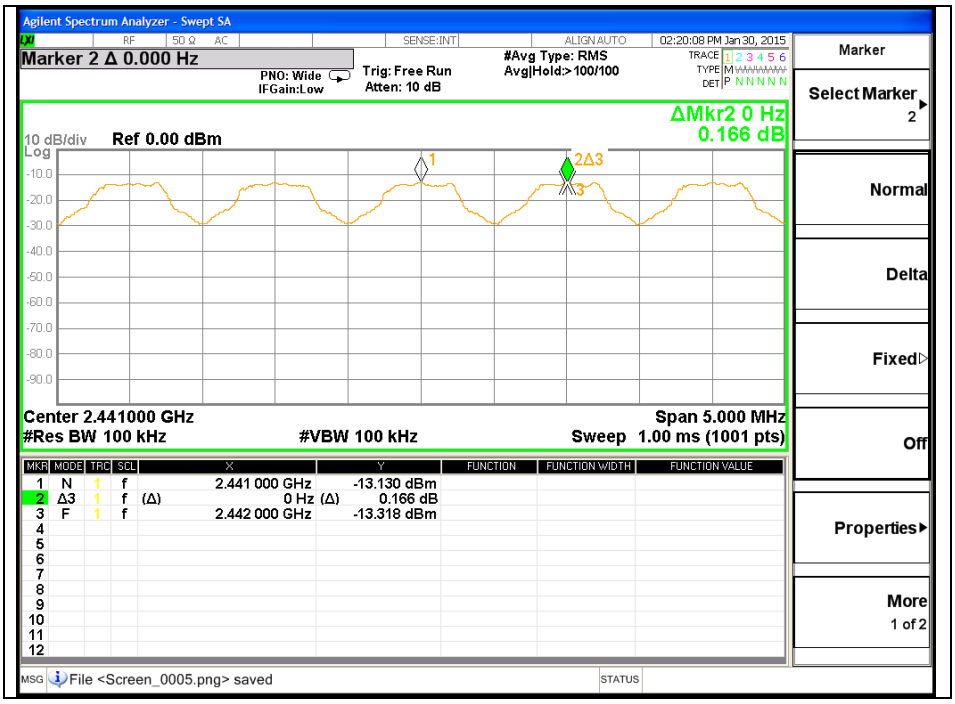

6. Number of Hopping Frequencies

6.1. Test Setup

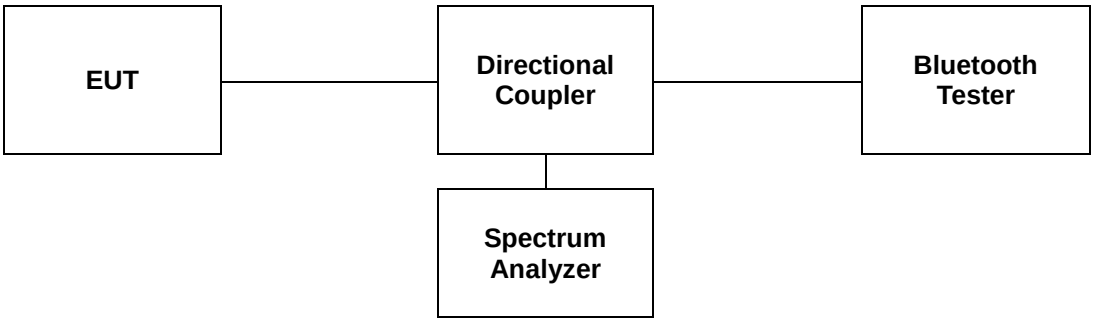

6.2. Limit

§15.247(a)(1)(iii), Frequency hopping systems in the 2 400–2 483.5 ㎒ band shall use at least 15 channels. The average time of occupancy on any channel shall not be greater than 0.4 seconds within a period of 0.4 seconds multiplied by the number of hopping channels employed. Frequency hopping systems may avoid or suppress transmissions on a particular hopping frequency provided that a minimum of 15 channels are used.

6.3. Test Procedure

The test follows DA000705.

The device supports Adaptive Frequency Hopping and will use a minimum of 20 channels of the 79 available channels.

The EUT must have its hopping function enabled. Use the following spectrum analyzer settings:

1. Remove the antenna from the EUT and then connect a low loss RF cable from the antenna the port to the Spectrum analyzer
2. Set spectrum analyzer Start = 2 400 ㎒, Stop = 2 441.5 ㎒, Sweep=sweep and Start = 2 441.5 ㎒, Stop = 2 483.5 ㎒, Sweep = sweep. Detector = peak.
3. Set the spectrum analyzer as RBW, VBW = 510 ㎑.
4. Max hold, allow the trace to stabilize and count how many channel in the band.

The results shown in this test report refer only to the sample(s) tested unless otherwise stated. This test report cannot be reproduced, except in full, without prior written permission of the Company.

6.4. Test Results

Ambient temperature : (23 ± 1) ℃
Relative humidity : 47 % R.H.

Operation Mode	Number of Hopping Frequency	Limit
GFSK	79	≥ 15

Remark:
Measurement is made with EUT operating in hopping mode between 79 channels providing a worse case scenario as compared to AFH mode hopping between 20 channels.

The results shown in this test report refer only to the sample(s) tested unless otherwise stated. This test report cannot be reproduced, except in full, without prior written permission of the Company.

Operating Mode: GFSK

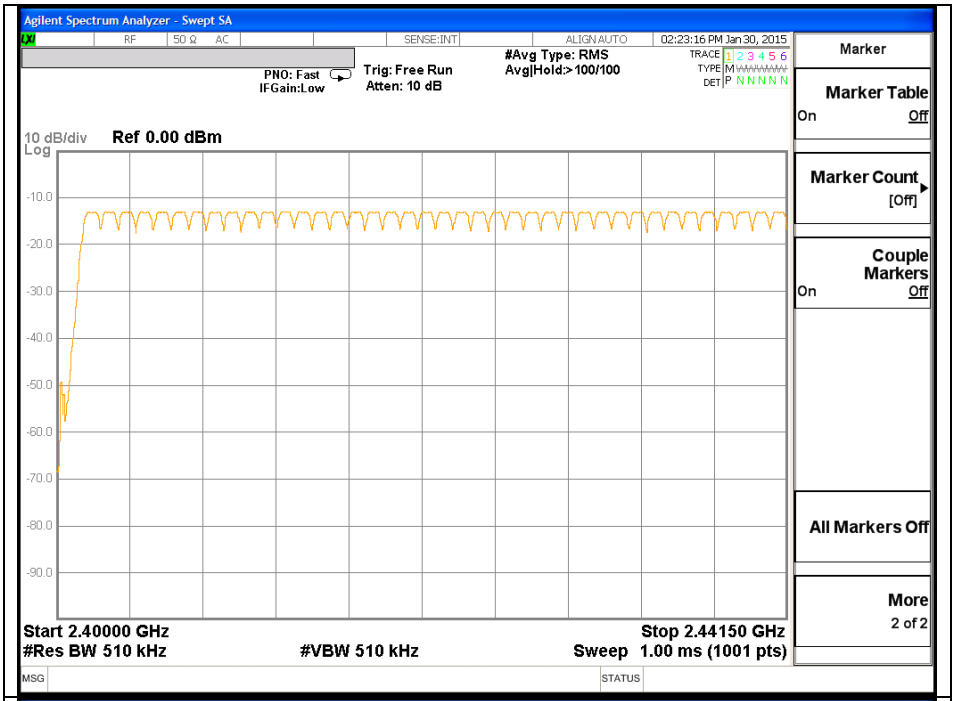

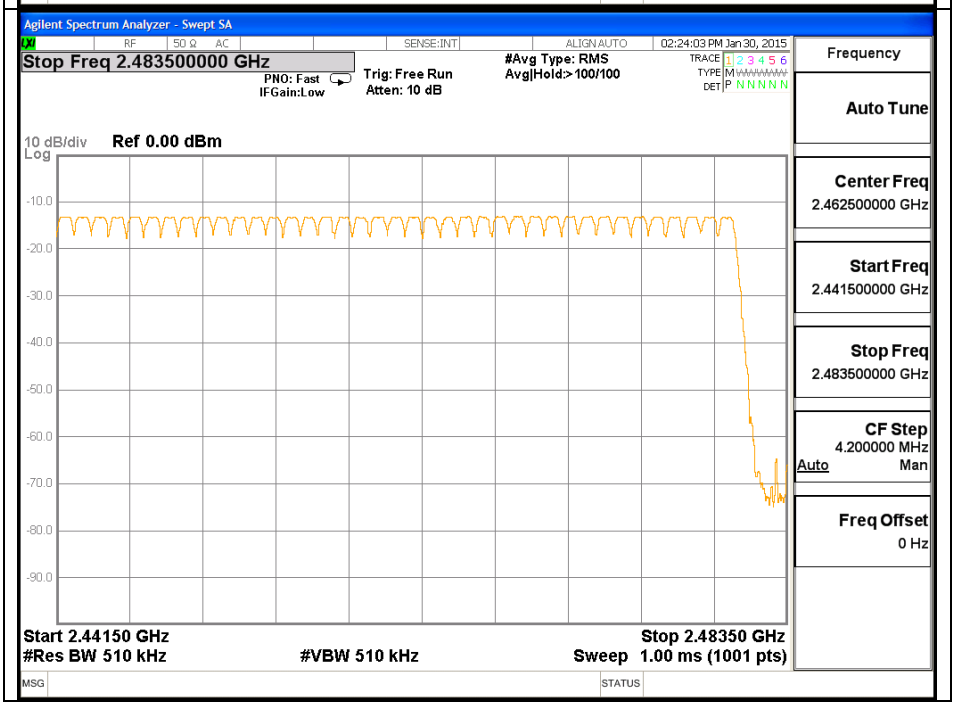

The results shown in this test report refer only to the sample(s) tested unless otherwise stated. This test report cannot be reproduced, except in full, without prior written permission of the Company.

7. Time of Occupancy (Dwell Time)

7.1. Test Set up

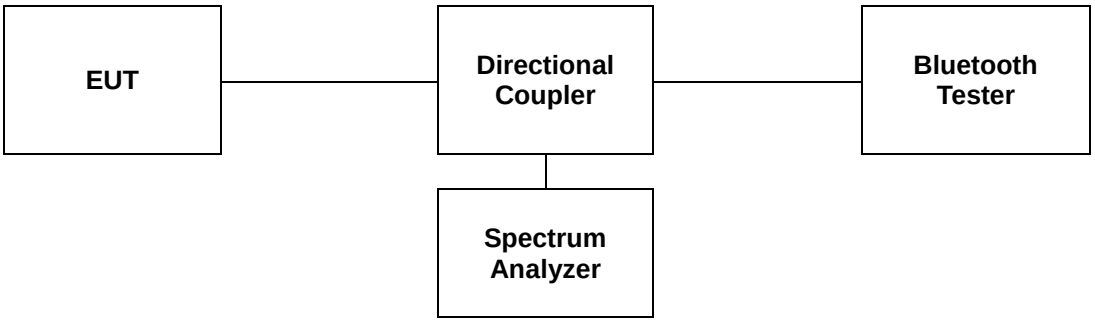

7.2. Limit

§15.247(a)(1)(iii) For frequency hopping system operating in the 2 400 – 2 483.5 ㎒ band, the average time of occupancy on any frequency shall not be greater than 0.4 second within a 31.6 second period.

A period time = 0.4(s) * 79 = 31.6(s)

***Adaptive Frequency Hopping**

A period time = 0.4(s) * 20 = 8 (s)

7.3. Test Procedure

The test follows DA000705.

1. Check the calibration of the measuring instrument using either an internal calibrator or a known signal from an external generator.
2. Position the EUT as shown in test setup without connection to measurement instrument. Turn on the EUT and connect its antenna terminal to measurement instrument via a low loss cable.
3. Measure the time duration of one transmission on the measured frequency. And then plot the result with time difference of this time duration.
4. The Bluetooth has 3 type of payload DH1, DH3, DH5.The hopping rate is insisted of 1 600 per second.

The EUT must have its hopping function enabled. Use the following spectrum analyzer setting:

Span = zero span, centered on a hopping channel
RBW = 1 ㎒
VBW ≥ RBW
Sweep = as necessary to capture the entire dwell time per hopping channel
Detector = peak
Trace = max hold
Use the marker-delta function to determine the dwell time. If this value varies with different modes of operation repeat this test for each variation.

The results shown in this test report refer only to the sample(s) tested unless otherwise stated. This test report cannot be reproduced, except in full, without prior written permission of the Company.

7.4. Test Results

Ambient temperature : (23 ± 1) ℃
Relative humidity : 47 % R.H.

7.4.1. Packet Type: DH1

Operation Mode	Frequency	Dwell Time (㎳)	Time of occupancy on the Tx Channel in 31.6 sec (㎳)	Limit for time of occupancy on the Tx Channel in 31.6 sec (㎳)
GFSK	2 441 ㎒	0.43	137.60	400

Note:
Time of occupancy on the TX channel in 31.6 sec
In case of GFSK, 0.43 × {(1600 ÷ 2) / 79} × 31.6 = 137.60 ㎳

Operating Mode: GFSK

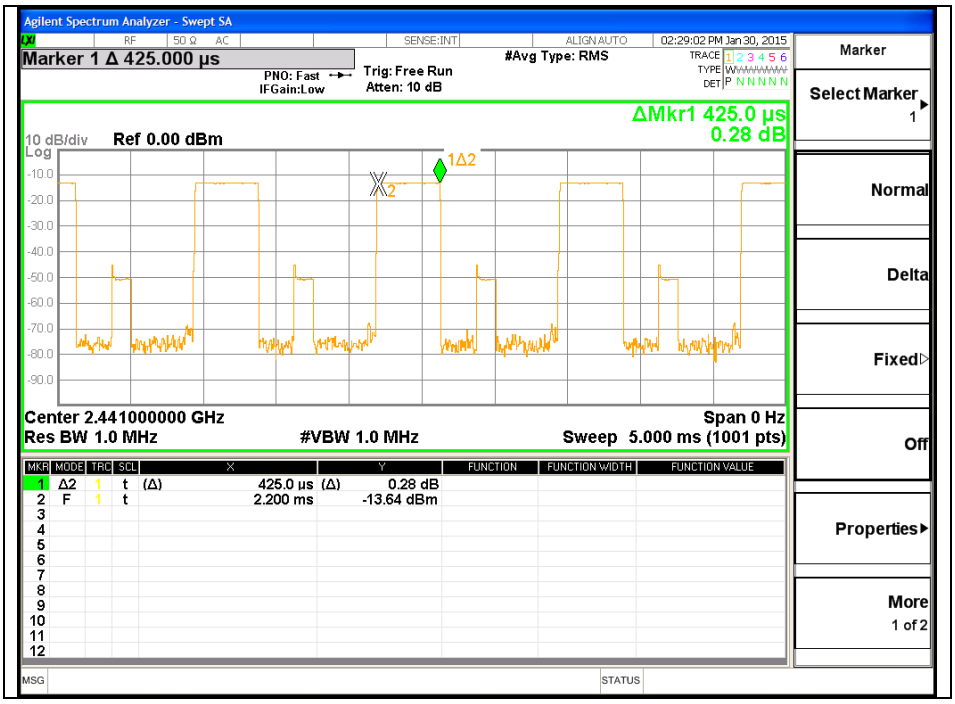

7.4.2. Packet Type: DH3

Operation Mode	Frequency	Dwell Time (㎳)	Time of occupancy on the Tx Channel in 31.6 sec (㎳)	Limit for time of occupancy on the Tx Channel in 31.6 sec (㎳)
GFSK	2 441 ㎒	1.69	270.40	400

Note:
Time of occupancy on the TX channel in 31.6 sec
In case of GFSK, 1.69 × {(1600 ÷ 4) / 79} × 31.6 = 270.40 ㎳

Operating Mode: GFSK

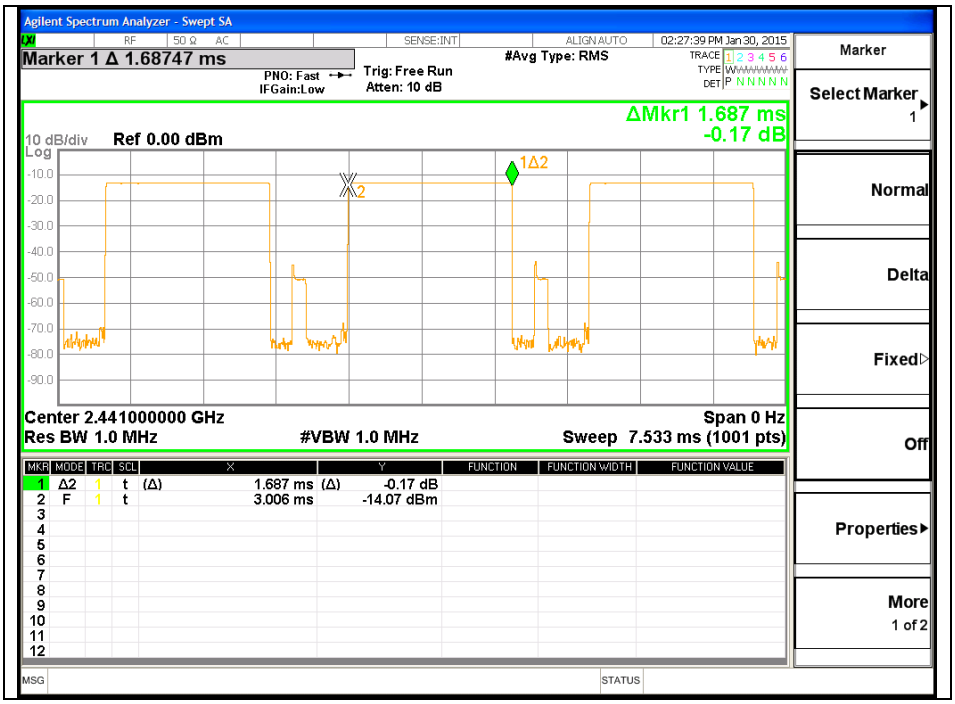

7.4.3. Packet Type: DH5

Operation Mode	Frequency	Dwell Time (㎳)	Time of occupancy on the Tx Channel in 31.6 sec (㎳)	Limit for time of occupancy on the Tx Channel in 31.6 sec (㎳)
GFSK	2 441 ㎒	2.93	312.53	400

Note:
Time of occupancy on the TX channel in 31.6 sec
In case of GFSK, 2.93 × {(1600 ÷ 6) / 79} × 31.6 = 312.53 ㎳

Operating Mode: GFSK

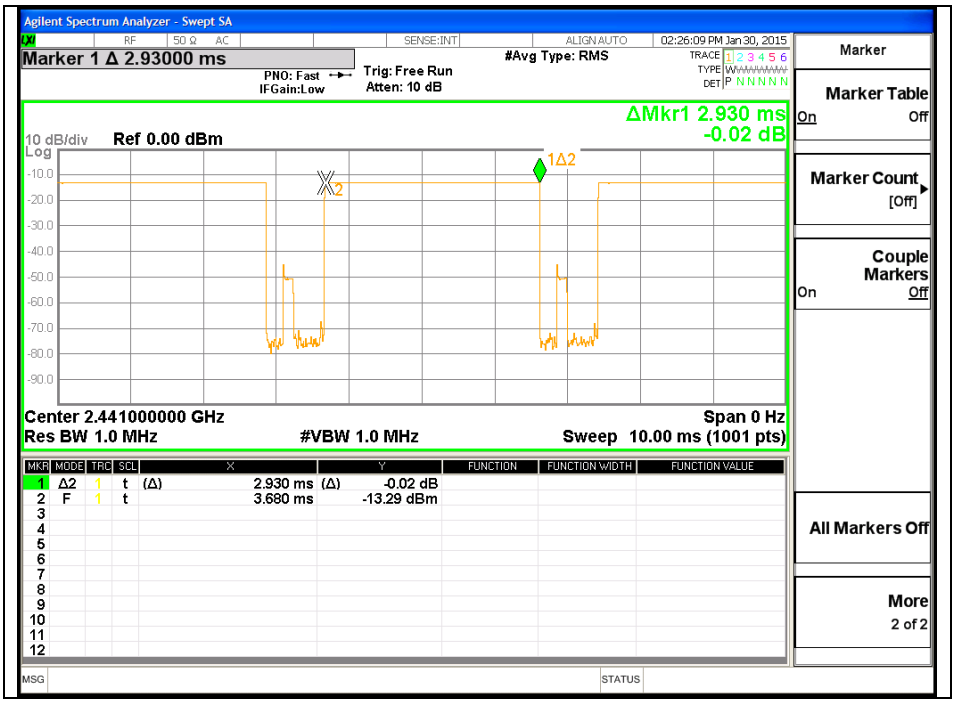

7.4.4. Packet Type: DH1 (Adaptive Frequency Hopping)

Operation Mode	Frequency	Dwell Time (㎳)	Time of occupancy on the Tx Channel in 8 sec (㎳)	Limit for time of occupancy on the Tx Channel in 8 sec (㎳)
GFSK	2 441 ㎒	0.42	67.20	400

Note:
Time of occupancy on the TX channel in 8 sec
In case of GFSK, 0.42 × {(800 ÷ 2) / 20} × 8 = 67.20 ㎳

Operating Mode: GFSK

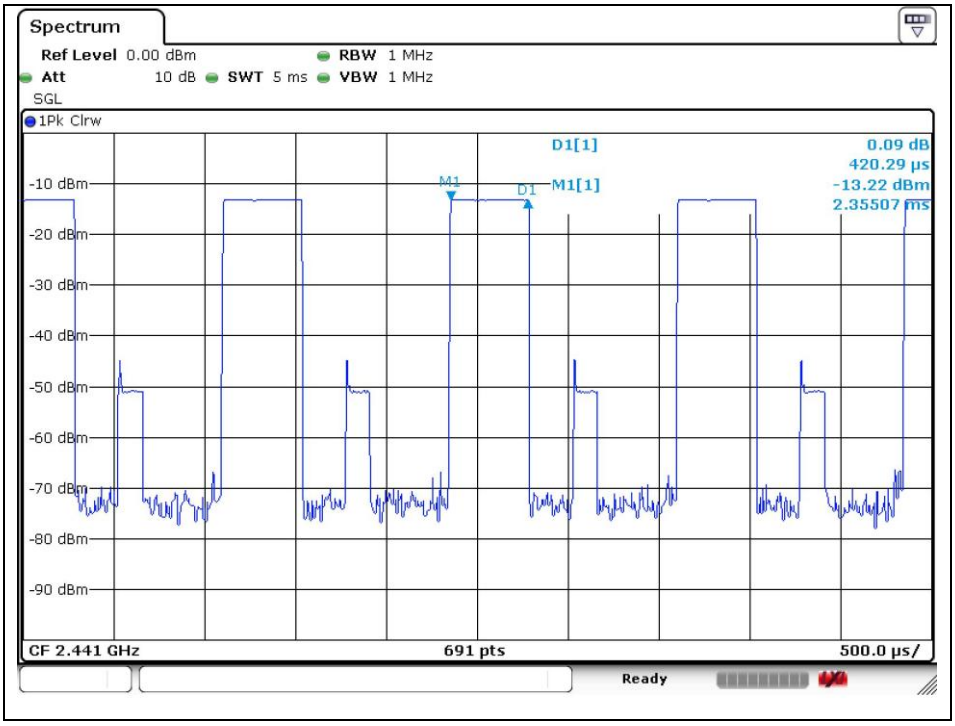

7.4.5. Packet Type: DH3 (Adaptive Frequency Hopping)

Operation Mode	Frequency	Dwell Time (㎳)	Time of occupancy on the Tx Channel in 8 sec (㎳)	Limit for time of occupancy on the Tx Channel in 8 sec (㎳)
GFSK	2 441 ㎒	1.67	133.60	400

Note:
Time of occupancy on the TX channel in 8 sec
In case of GFSK, 1.67 × {(800 ÷ 4) / 20} × 8 = 133.60 ㎳

Operating Mode: GFSK

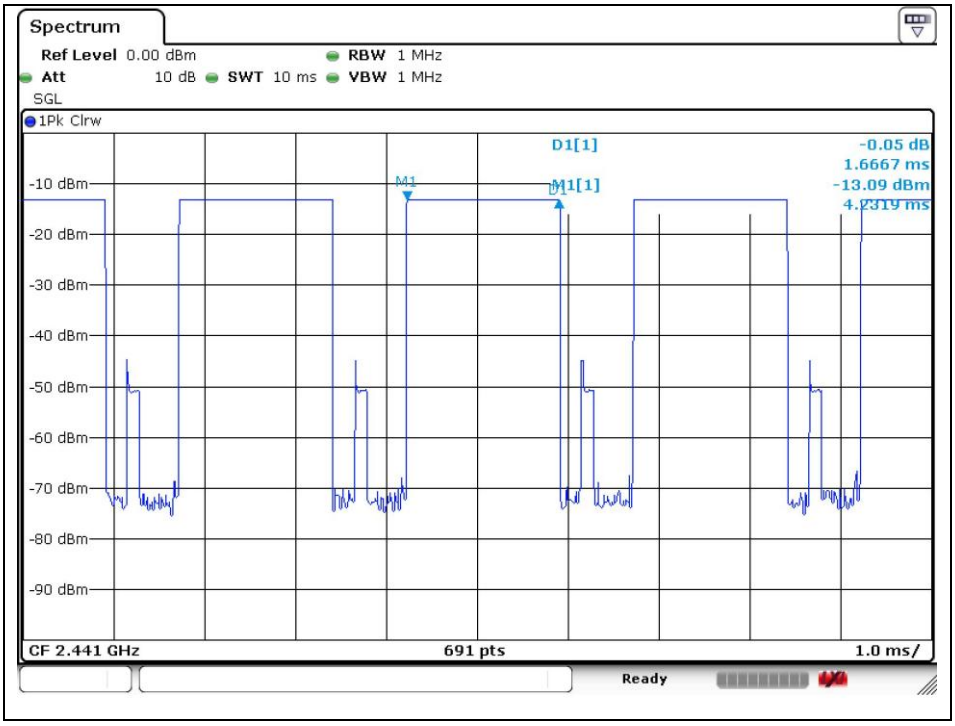

7.4.6. Packet Type: DH5 (Adaptive Frequency Hopping)

Operation Mode	Frequency	Dwell Time (㎳)	Time of occupancy on the Tx Channel in 8 sec (㎳)	Limit for time of occupancy on the Tx Channel in 8 sec (㎳)
GFSK	2 441 ㎒	2.93	156.27	400

Note:
Time of occupancy on the TX channel in 8 sec
In case of GFSK, 2.93 × {(800 ÷ 6) / 20} × 8 = 156.27 ㎳

Operating Mode: GFSK

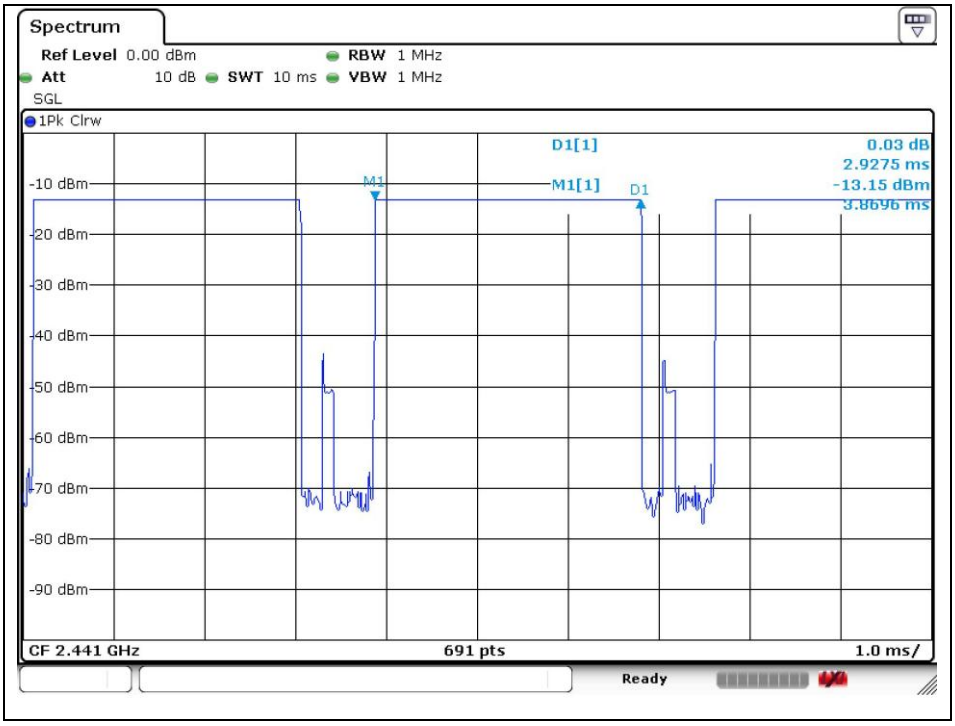

8. Antenna Requirement

8.1. Standard Applicable

For intentional device, according to FCC 47 CFR Section §15.203, an intentional radiator shall be designed to ensure that no antenna other than that furnished by the responsible party shall be used with the device. And according to FCC 47 CFR Section §15.247 (b) if transmitting antennas of directional gain greater than 6 dBi are used, the power shall be reduced by the amount in dB that the gain of the antenna exceeds 6 dBi.

8.2. Antenna Connected Construction

Antenna used in this product is PCB Antenna type with gain of -1.90 dBi.

The results shown in this test report refer only to the sample(s) tested unless otherwise stated. This test report cannot be reproduced, except in full, without prior written permission of the Company.