www.taiden.com

TAIDEN®

HCS-1081 Wireless E-ink Electronic Nameplate

Excellent solutions for conferences

HCS-1081无线E-ink电子名牌

User's Manual

用户手册

V 1.0

TAIDEN INDUSTRIAL CO.,LTD.

Printed in SHENZHEN 08/2015

为了安全和方便安装请仔细阅读并妥善保管本说明书

Please read this manual before using the apparatus and keep it for future reference

功能指示 / Functions and indications

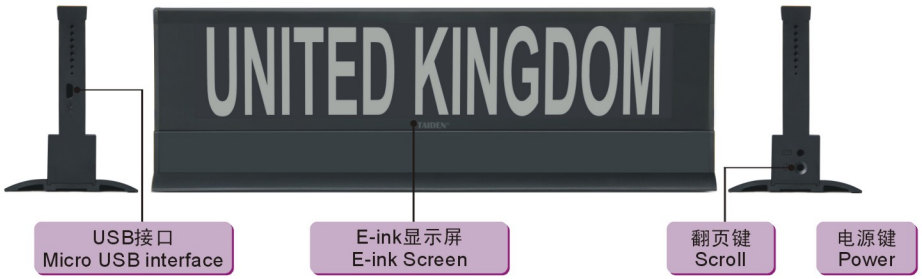

注：在名牌背面显示屏左侧有一个指示灯，红色表示名牌正在进行初始化，绿色表示名牌在正常工作状态。

Note: there is an indicating light in the back side left of the nameplate, red stands for initialization and green stands for working on.

系统连接图 / System Connection

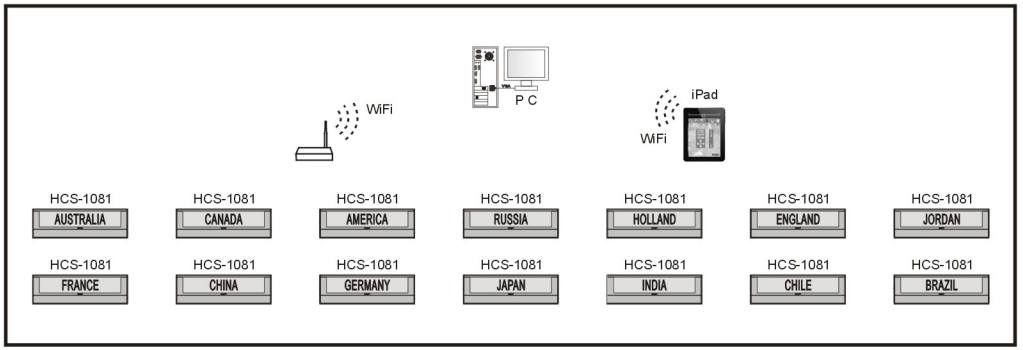

操作/Operation

开/关机
按下电源键开机；
长按电源键关机。

设备信息
开机状态下按电源键，名牌屏幕显示设备信息，再次按电源键退出。

名牌升级-U盘
将文件update.sh和hcs1080放在U盘根目录下，连接U盘后，电子名牌检测到升级文件自动升级，屏幕闪烁后变为黑屏状态，黑屏3-5秒后取下U盘完成升级，升级完成后名牌自动重启。

名牌升级-PC
加载文件Hcs1080u.img到PC控制软件，然后下发升级命令完成机器升级，升级完成后名牌自动重启。

Power On/Off
Press the "Power" key to power on nameplate; Press and hole the "Power" key for 3 seconds to power off.

Device Information
Press the "Power" key, the front screen of nameplates display the device information; and then press the "Power" key again to exit display.

Upgrading via U-disk
a) Copy update.sh and hcs1080 into root directory of U-disk;
b) Connect U-disk into micro USB socket; when detected U-disk, the screen flash for seconds and then turn black, take away the U-disk after 3-5 seconds. Nameplates restart automatically when upgrading finished.

Upgrading via PC
Import the file Hcs1080u.img to the software and then send upgrading command. Nameplates restart automatically when upgrading finished.

技术参数 / Technical Specifications

电气特性
显示尺寸.....310 mm x 60 mm
分辨率.....1200 x 232
最大功耗（屏幕刷新）.....2.1 W
静态功耗.....≤50 mW
控制方式.....无线WiFi

物理特性
尺寸（高x宽x深）.....112×362×80 mm
重量.....1.4 kg
颜色.....黑色（PANTONE 419 C）

Electrical
Display dimensions.....310 mm x 60 mm
Resolution.....1200 x 232
Max. Consumption.....2.1 W
Static consumption.....≤50 mW
Connection.....WiFi

Mechanical
Dimensions (h x w x d).....112×362×80 mm
Weight.....1.4 kg
Color.....Black (PANTONE 419 C)

FCC Information and Copyright

This equipment has been tested and found to comply with the limits for a Class B digital device, pursuant to part 15 of the FCC Rules.
These limits are designed to provide reasonable protection against harmful interference in a residential installation. This equipment generates,
uses and can radiate radio frequency energy and, if not installed and used in accordance with the instructions, may cause harmful interference
to radio communications. However, there is no guarantee that interference will not occur in a particular installation. If this equipment does
cause harmful interference to radio or television reception, which can be determined by turning the equipment off and on, the user is
encouraged to try to correct the interference by one or more of the following measures:
—Reorient or relocate the receiving antenna.
—Increase the separation between the equipment and receiver.
—Connect the equipment into an outlet on a circuit different from that to which the receiver is connected.
—Consult the dealer or an experienced radio/TV technician for help.

15.19 Labelling requirements.
This device complies with part 15 of the FCC Rules. Operation is subject to the following two conditions:
(1)This device may not cause harmful interference, and
(2) this device must accept any interference received, including interference that may cause undesired operation.

changes or modifications not expressly approved by the party responsible for compliance could void the user's authority to operate the equipment.

FCC RF warning statement: the device has been evaluated to meet general RF exposure requirement , The device can be used in portable exposure condition without restriction.