LTE Media Player

Device Overview

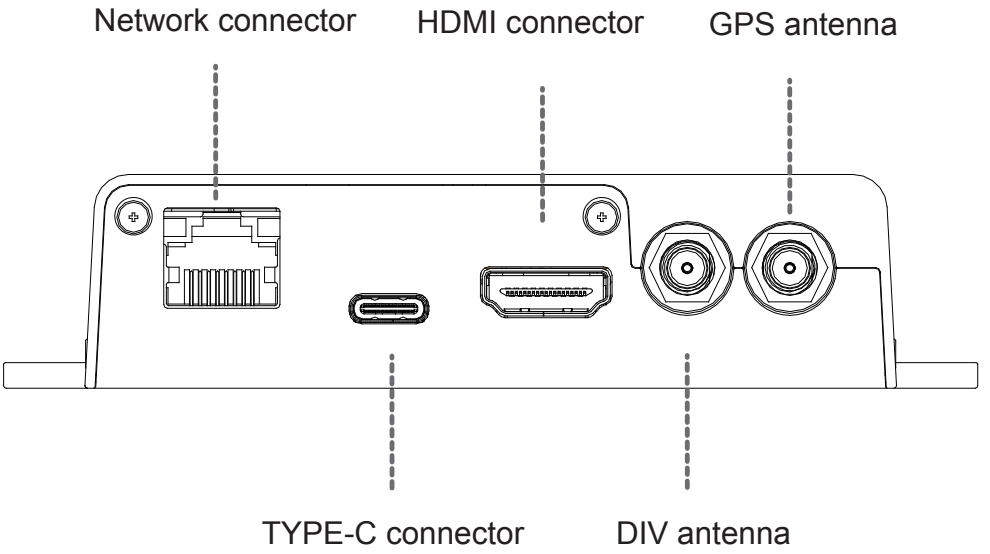

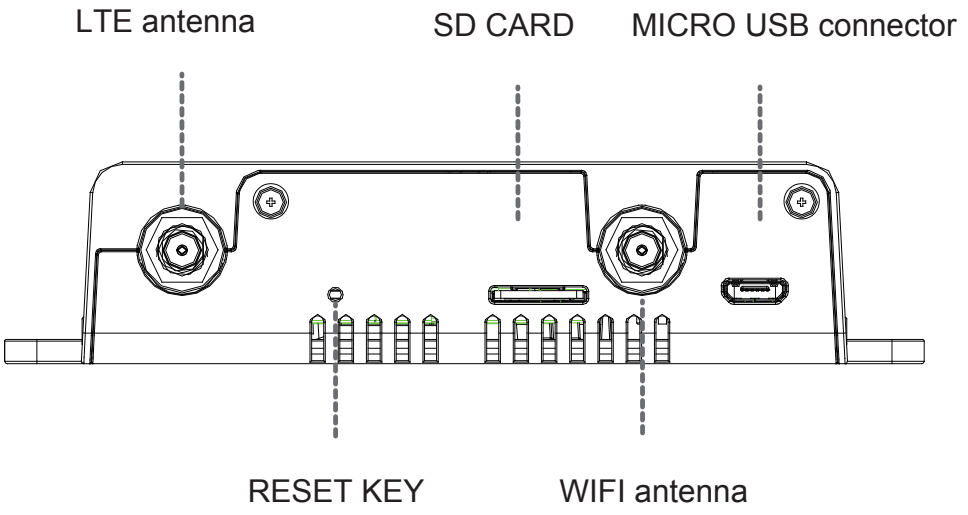

FCC Regulations:
This device complies with part 15 of the FCC Rules. Operation is subject to the following two conditions: (1) This device may not cause harmful interference, and (2) this device must accept any interference received, including interference that may cause undesired operation.
This device has been tested and found to comply with the limits for a Class B digital device, pursuant to Part 15 of the FCC Rules. These limits are designed to provide reasonable protection against harmful interference in a residential installation. This equipment generates, uses and can radiated radio frequency energy and, if not installed and used in accordance with the instructions, may cause harmful interference to radio communications. However, there is no guarantee that interference will not occur in a particular installation If this equipment does cause harmful interference to radio or television reception, which can be determined by turning the equipment off and on, the user is encouraged to try to correct the interference by one or more of the following measures:
-Reorient or relocate the receiving antenna.
-Increase the separation between the equipment and receiver.
-Connect the equipment into an outlet on a circuit different from that to which the receiver is connected.
-Consult the dealer or an experienced radio/TV technician for help.
Caution: Changes or modifications not expressly approved by the party responsible for compliance could void the user ‘s authority to operate the equipment.
RF Exposure Information
This device meets the government’ s requirements for exposure to radio waves.
This device is designed and manufactured not to exceed the emission limits for exposure to radio frequency (RF) energy set by the Federal Communications Commission of the U.S. Government.

This device complies with FCC radiation exposure limits set forth for an uncontrolled environment. In order to avoid the possibility of exceeding the FCC radio frequency exposure limits, human proximity to the antenna shall not be less than 20cm (8 inches) during normal operation.

Ant. Typ IFA
antenna peak gain
antenna gain for LTE band1： -1.1dBi
antenna gain for LTE band2： -1.3dBi
antenna gain for LTE band3： -1.1dBi
antenna gain for LTE band4： -1.4dBi
antenna gain for LTE band5： -1.4dBi
antenna gain for LTE band7： -1.8dBi
antenna gain for LTE band13： -2.6dBi
antenna gain for LTE band66： -1.4dBi
antenna gain for BT: -1.9dBi
antenna gain for 2.4GWIFI: -1.9dBi
antenna gain for 5GWIFI: -2.6 dBi

Preparing your device

Installing HDMI cable

Install HDMI cable as shown below:

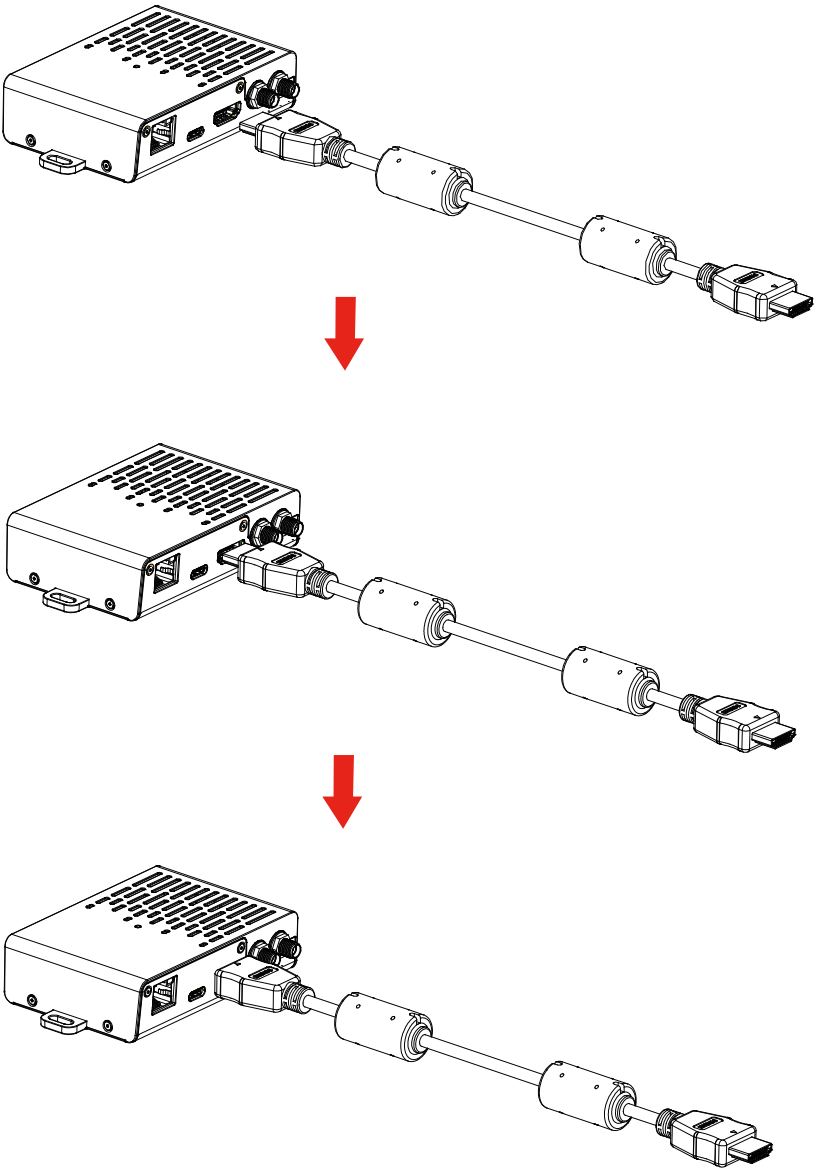

Installing Type-C USB cable

Install Type-C USB cable as shown below:

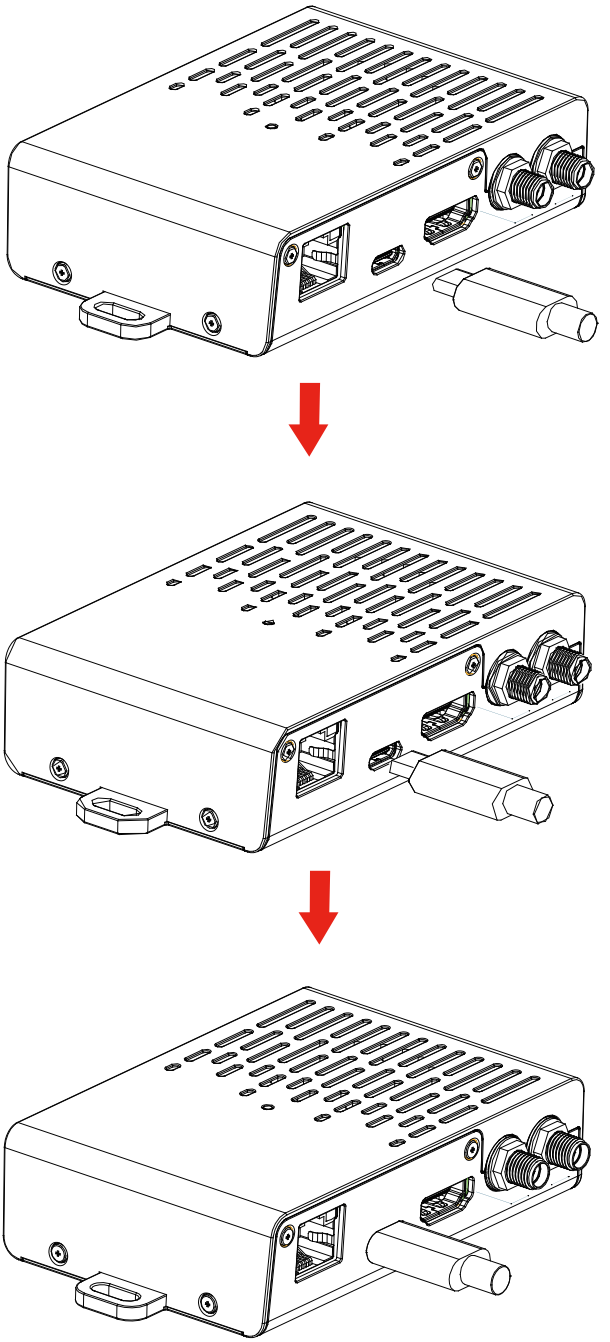

Installing Network connector

Install RJ45 GigE WAN/LAN Port as shown below:

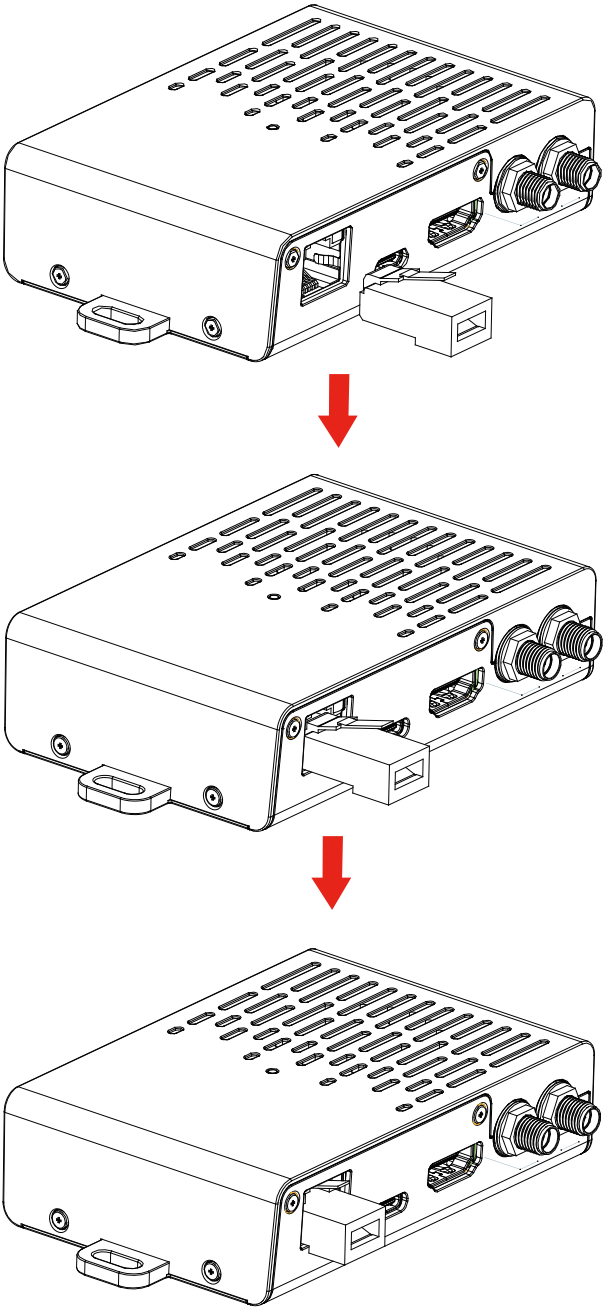

Installing Micro USB cable

Install Micro USB cable as shown below:

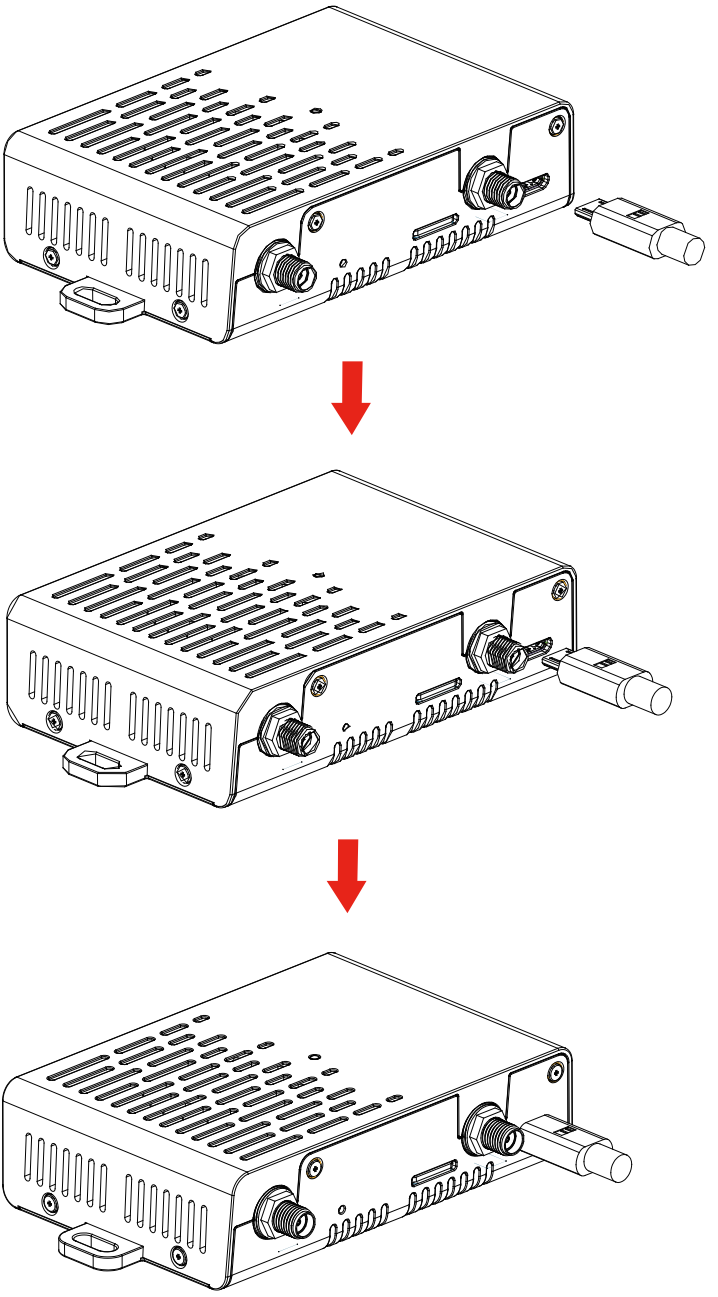

Preparing microSD

Hold your microSD card with the metal contacts facing down and slide it into the microSD card slot.

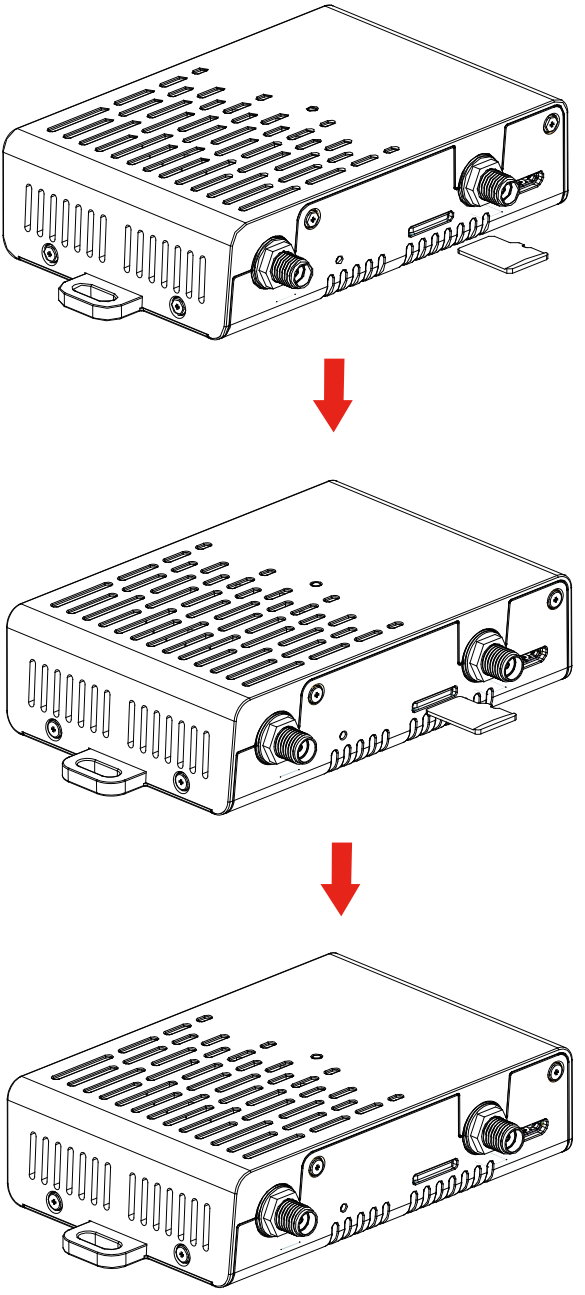

Installing DIV antenna

You can install DIV antenna as shown below:

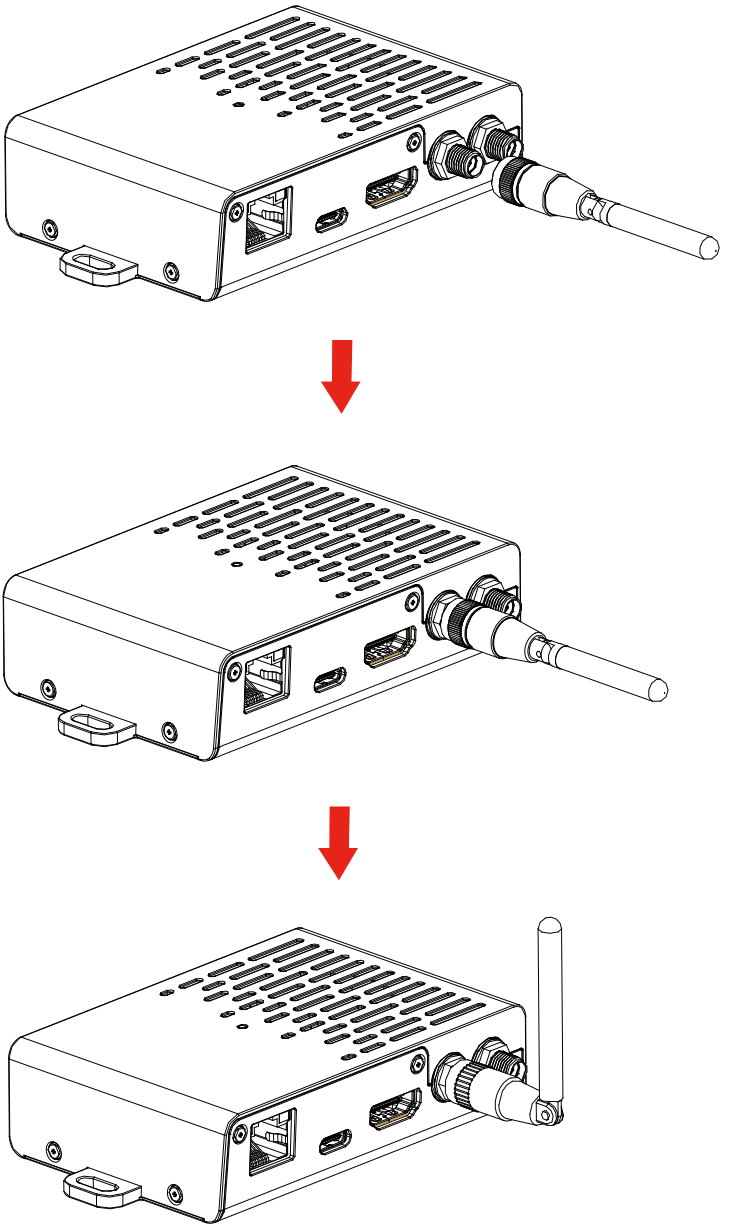

Installing GPS antenna

You can install GPS antenna as shown below:

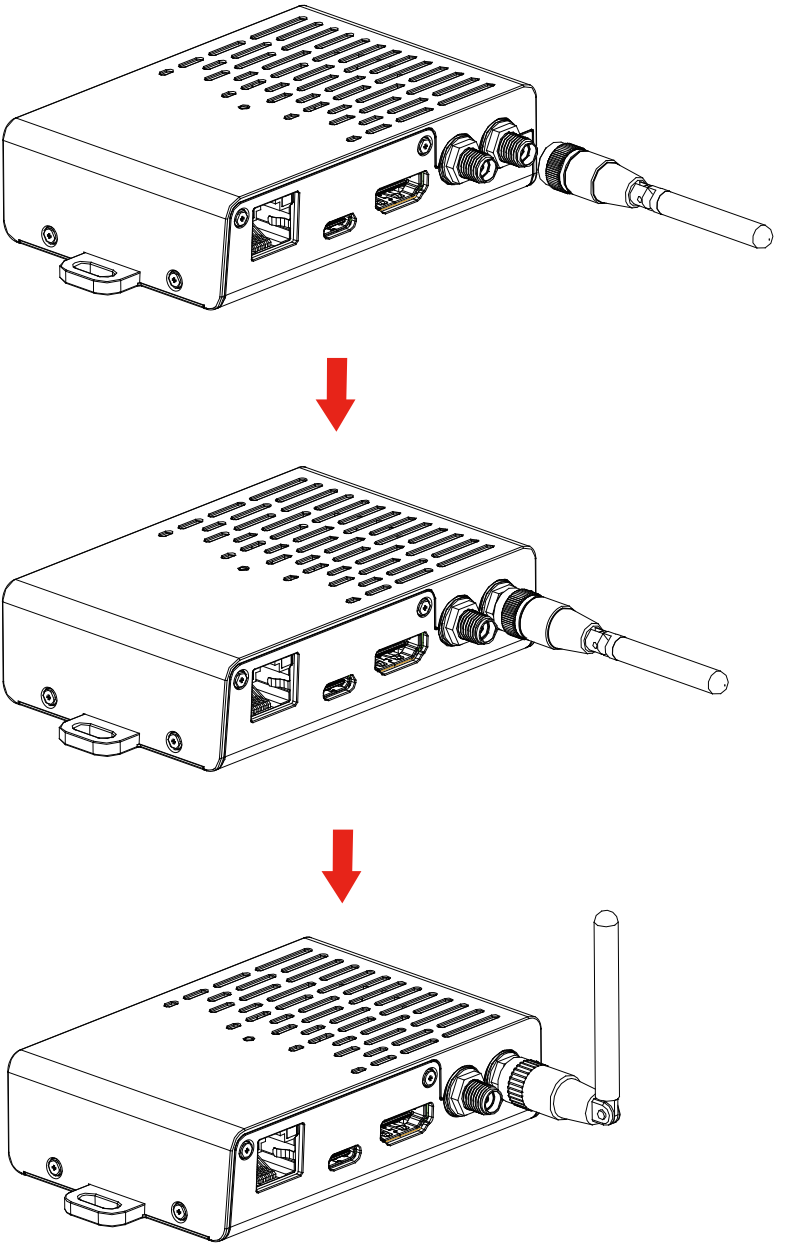

Installing LTE antenna

You can install LTE antenna as shown below:

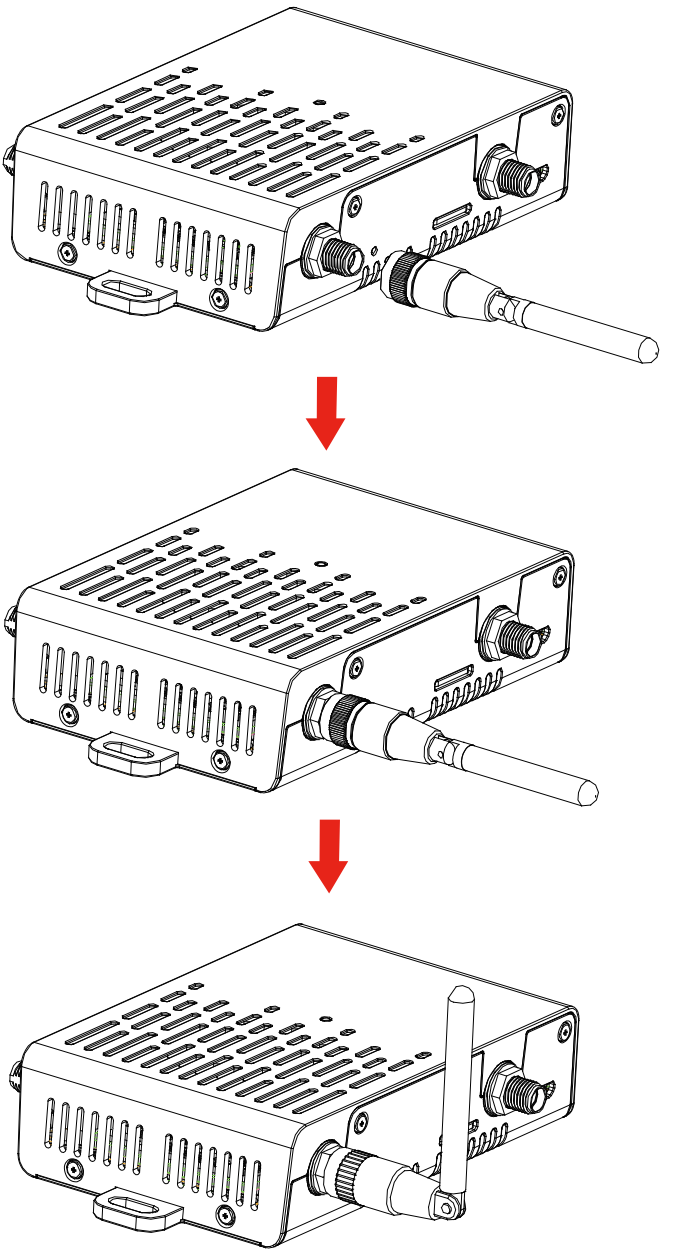

Installing WIFI antenna
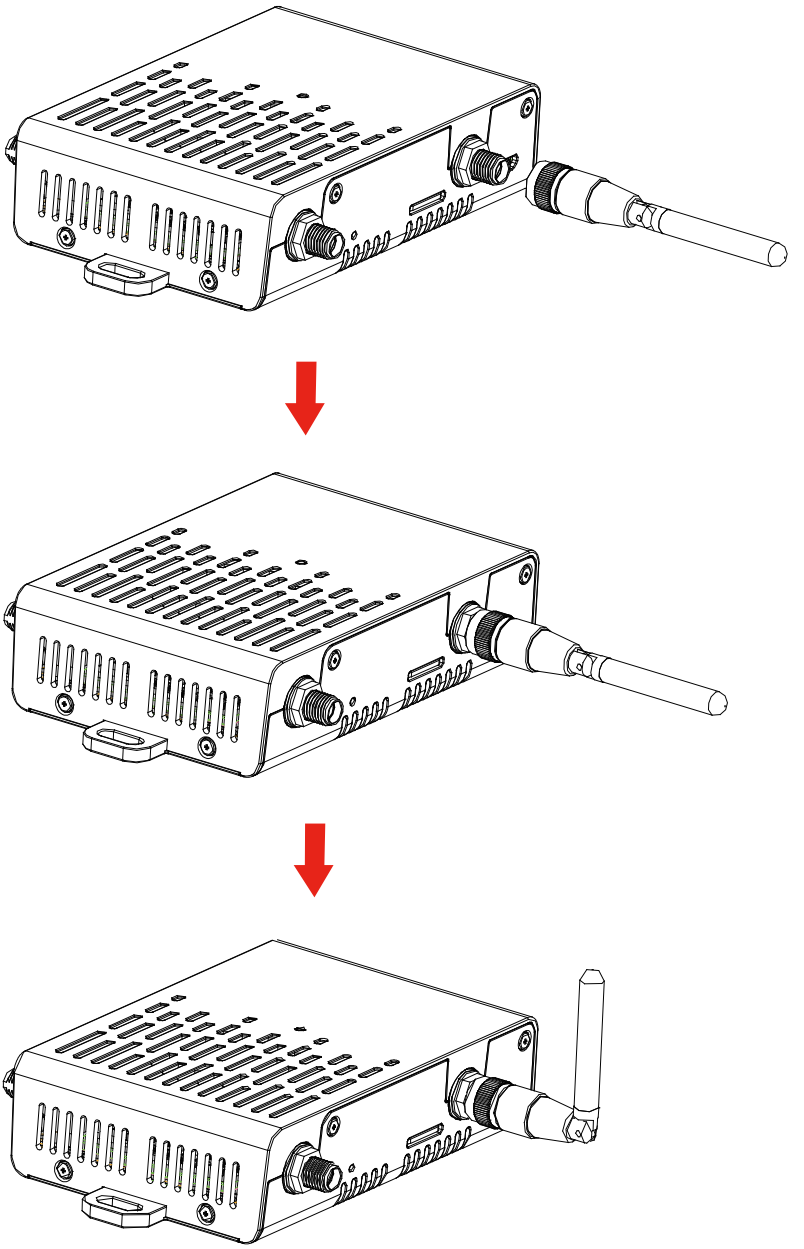
You can install WIFI antenna as shown below: