Before beginning assembly, please read these instructions thoroughly.

MINI-Z HYBRID SPREAD SPECTRUM SYSTEM

SyncRo

EX-6

MHS 2.4GHz System

MINI-Z HYBRID SPREAD SPECTRUM

ASF 2.4GHz System

AUTO SELECTED FREQUENCY SYSTEM

DIGITAL PROPORTIONAL SYSTEM

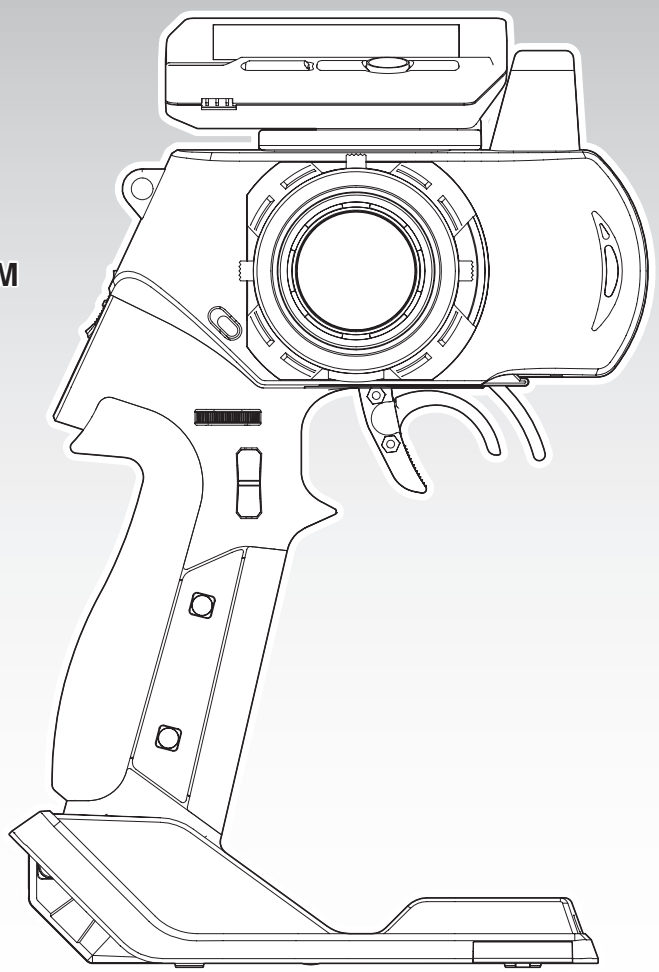

Instruction Manual

CE

*Specifications are subject to be changed without prior notice!

© Copyright 2015 KYOSHO CORPORATION / 禁無断転載複製

82030-T01

KYOSHO®

THE FINEST RADIO CONTROL MODELS

■ Table of Contents

Title	Page
■ Table of Contents	2
■ For Safe Operation	3
■ Getting Started	5
●Transmitter Assembly	5
●Transmitter Dismantling	5
■ Names of Parts	6
●ET Keys (1-3) and BT Button (1)	7
●Steering Adjustment	7
●Wheel Cap Removal	7
●Throttle Adjustment	7
●Throttle Position Adjustment	7
●Colored Grip and Pad Replacement	7
●Unit Connector	8
●Power Switch	8
■ Preparations	9
●Battery Installation	9
●Battery Level Warning	9
● Initializing EX-6	10
●How to change the Modulation	10
●Pairing	11
■ Procedures Prior to Operation	12
●Trim and Sub Trim Operation	13
■ Operating procedure	14
●STEERING	14
●THROTTLE	15
●3CH 4CH operation	16
■ Display and Control Method with the Xpansion unit attached	17
●Basic Operations to Change Settings	17
●How to attach Xpansion unit	18
●Startup Screen and Initial Screen	19
●VR information setting	20
●How to change the Modulation mode	20
●Pairing	21
■TOP MENU	22
■□□ FUNCTION	24
● Model Menu (Model)	24
▶Model Select (MDL-Select)	24
▶Model Name (MDL-Name)	24
▶Model Copy (MDL-Copy)	25
▶Model Reset (MDL-Reset)	25
● TIMER MENU	26
▶TRGSTART (Trigger Start)	26
▶LAP HISTORY (Lap History)	26
▶ALARM (Alarm)	26
●KEYSET (Key setting MENU)	27
●3・4CH (3・4Channel)	28
▶2WAY (2WAY)	28
▶3WAY (3WAY)	28
▶5WAY (5WAY)	29
▶ANALOG (Analog mixing MENU)	29
▶GYRO (GYRO mixing MENU)	29
▶TWIN SERVO (Twin servo mixing MENU)	30
▶4WS (4WS mixing MENU)	30
▶AMP (AMP mixing MENU)	31
▶T-MIX (Throttle mixing MENU)	32
●TRIM SET (Trim SET MENU)	33
▶STEER AUTO TRIM (Steering auto trim)	33
▶STEER AUTO BALANCE (Steering auto balance Left)	33
▶STEER AUTO BALANCE (Steering auto balance Right)	33
●SYSTEM MENU	34
▶DISPLAY MENU	34
▶BATTERY TYPE	34
! WARNING ! Warning Display	35
▶CALCULATOR	36
▶SOUND MENU	36
▶VR INFORMATION Volume information	36
▶KEYSPEED	37
▶OPERATIN ALARM	37
□■□STEERING MENU	38
●TRAVEL MENU	38
▶ST TRAVEL Steering Travel	38
▶ST BALANCE L R Seering Balance L R	38
●TRIM MENU	39
▶ST TRIM Steering Trim	39
▶ST SUBTRIM Steering Subtrim	39
▶ST TRIMRATE Steering Trimrate	39
●ST SPEED Steering Speed	40
▶ST TURN Steering Turn Speed	40
▶ST RETURN Steering Return Speed	40
●DYNAMC Steering Dynamics	41
▶CURVE Steering curve	41
▶PUNCH Steering punch	41
●FEEL MENU	42
▶ST FEEL Steering feel MENU	42
●REVERSE Steering Reverse	42
▶ST REVERSE Steering Reverse	42
□□■THROTTLE MENU	43
●TRAVEL Throttle travel	43
▶TH TRAVEL F Throttle Travel F	43
▶TH TRAVEL B Throttle Travel B	43
●TRIM MENU	44
▶TH TRIM Throttle Trim	44
▶TH SUBTRIM Throttle Subtrim	44
▶TH TRIMRATE Throttle Trimrate	44
●TH SPEED Throttle Speed	45
▶TH TURN Throttle Turn Speed	45
▶TH RETURN Throttle Return Speed	45
●DYNAMC Throttle Dynamics	46
▶CURVE Throttle Curve	46
▶PUNCH Throttle punch	46
●FEEL Throttle feel MENU	47
▶TH FEEL Throttle feel	47
●OVERRIDE Throttle Override	48
●REVERSE Throttle Reverse	48
▶TH REVERSE Throttle Reverse	48
●CYCLE Throttle Cycle	49
▶ACCEL Throttle Acceleration	49
▶ABS Throttle ABS	49
●ATSTART Throttle Auto-Start	50
●OFFSET Throttle OFFSET	51
■ Glossary	52
■ FCC statement	55
■ Specifications	55

■ For Safe Operation

Improper handling may lead to dangerous situations. Therefore please read the following information carefully in order to ensure safe operation. Please also understand that Kyosho is not responsible for any injuries or damage which result from noncompliance of these cautions and notices.

⚠ **Warning!** Improper handling/usage may lead to a high probability of material damage as well as a possibility of serious personal injury or even death.

⚠ **Notice!** Improper handling/usage may lead to personal injury or material damage.

●When Installing Components

⚠ **Warning!** Prohibited matters	●Make sure metal parts on the model (car chassis) do not come into contact with each other. ※Contact between metal parts may result in noise, which could cause the receiver to malfunction and lead to an uncontrollable model. ●Do not cut or bundle the antenna cable. ※This may lower the receiver's sensitivity and lead to an uncontrollable model. ●Ensure correct polarity when installing transmitter and receiver batteries. ※Incorrect polarity may damage the product. ●Within Japan, this product is limited to usage with models which operate on the ground. ※Do not use for other non-designated purposes.
⚠ **Warning!** Enforcement matters	●Ensure that all connectors are connected securely. ※If connections become loose due to vibrations, it may lead to an uncontrollable model. ●Check servo operation to ensure the tie rod is not subject to excessive loads. ※Excessive loads may damage the servo or increase battery power consumption. ●MINI-Z body and other optional parts to use the Kyosho genuine. ※Kyosho is not responsible for any damages or injuries which result from use of this product in combination with other manufacturer's products.

●Notes for Usage

⚠ **Warning!** Prohibited matters	●Do not use when there is thunder. ※It is possible for lightning to strike the antenna. ●Do not use in the rain or in areas where water has accumulated. ※If water enters the product it may lead to an uncontrollable model. ●Do not use in the following locations: 1. Near R/C circuits (within 3km) 2. Near crowds, on streets, or near actual vehicles or ships. 3. Near high-voltage power lines or communication facilities. ※If signal interference, etc. causes an uncontrollable model, a serious accident may result. ●Do not use when your concentration levels are compromised by tiredness, alcohol, medication, etc. ※Mistakes in judgment may result in serious accidents.
⚠ **Warning!** Enforcement matters	●Check to ensure that the selected model memory matches the model to be controlled. ※Using an incorrect memory may lead to an uncontrollable model.
⚠ **Caution!** Prohibited matters	●Do not touch motor, etc. immediately after use as they may be hot. ※Doing so may lead to burns.

⚠ **Caution!** Enforcement matters	●When switching on, always turn on the transmitter first, followed by the MINI-Z. Follow the reverse order when switching off. ※If the wrong order is followed, it may lead to an uncontrollable model. ●Dismantling or modifying the RF Module (internalized in the case of the EX-6) is prohibited and is punishable by law. ※Disassemble or modify all of the product will cause a short circuit other accidents. Also, you may want to refuse acceptance of repair in the user consultation room. ●Do not use this product in aircraft, hospitals, or near fire alarms or medical equipment. ※This may lead to malfunctions and result in serious accidents. Also, by law you must cease operation if the product affects other wireless or electrical devices. ●2.4GHz transmitters must be registered with the Japan Radio Control Safety Association. ※The transmitter which you have purchased is already registered. Products which do not have proof of registration are illegal.

●Notes After Usage

⚠ **Warning!** Enforcement matters	●Make sure to remove the battery pack after driving. ※If the car is switched on accidentally, it may lead to a fire or an uncontrollable model. ●Keep transmitters, batteries, and models away from small children. ※Chemical agents and the items themselves may cause personal injury.
⚠ **Caution!** Enforcement matters	●Remove batteries from transmitter if it will not be used for a considerable time. ※If batteries are left in the transmitter, battery leakage may result in damage. ●Do not store transmitter/receiver in the following conditions: 1. Extremely hot (over 40°C) or cold (below 10°C) temperatures. 2. Locations in direct sunlight. 3. Locations with high humidity. 4. Locations subject to vibrations. 5. Locations with lots of dust. ※These conditions may cause the case to deform and damage the product.

●Transmitter Battery Handling and Charging (separately available option: Kondo Kagaku Co., Ltd.)

⚠ **Danger!** Enforcement matters	●Never short-circuit the battery connector. ※This may lead to a fire or explosion. ●Do not dispose batteries in fires. ※This is very dangerous and may lead to an explosion. ●Use KO Propo chargers to charge the battery and use the correct current (under 1A). ※Incorrect current may lead to battery damage, overheating, or leakage. ※Other manufacturer's chargers may not have a automatic cutoff function.
⚠ **Danger!** Enforcement matters	●Do not subject the battery to strong shocks. ※This may damage the battery and cause leakage or a short circuit. ●Do not dismantle or modify the battery. ※This may cause dangerous leakage of battery fluids. ●Keep away from water. Do not charge a wet battery. ※This may cause overheating and damage. ●Do not charge alkaline batteries. ※Alkaline and other single-use batteries cannot be recharged. Doing so may lead to fire and damage. ●Do not use wet hands when plugging in the charger's AC Adapter. ※This may result in electrical shocks.

※If there is battery fluid leakage, avoid contact with eyes as it may result in blindness. If contact with eyes occur, flush with large amounts of water and seek medical attention immediately.
※When disposing batteries, Ni-Cd, Ni-MH, Li-Po, and Li-Fe batteries should be recycled in order to help protect the environment.

Getting Started

※ Depending on the model, expansion unit has been installed at the factory.

[Legend] :Point :Notice

Transmitter Assembly

Insert the Grip Unit into the Master Unit, then attach the Steering Unit.

Remove the connector cover before use.

1.

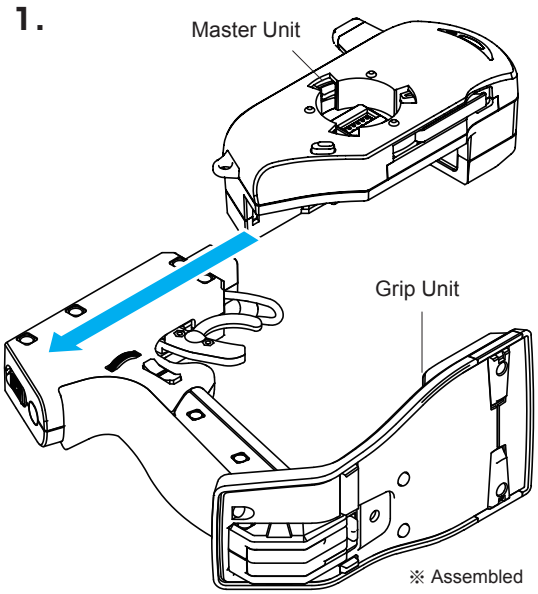

2.

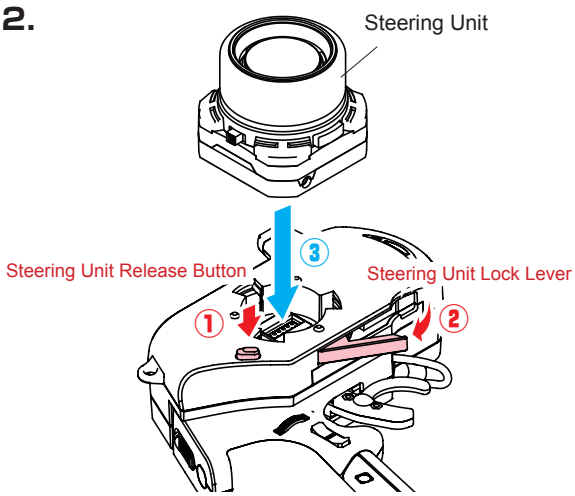

3.

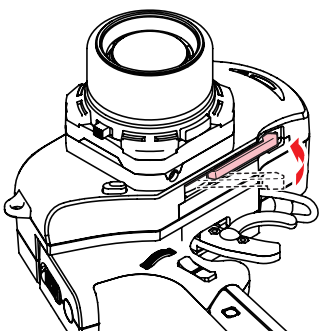

Transmitter Dismantling

Detach the Steering Unit, then detach the Master Unit.

1.

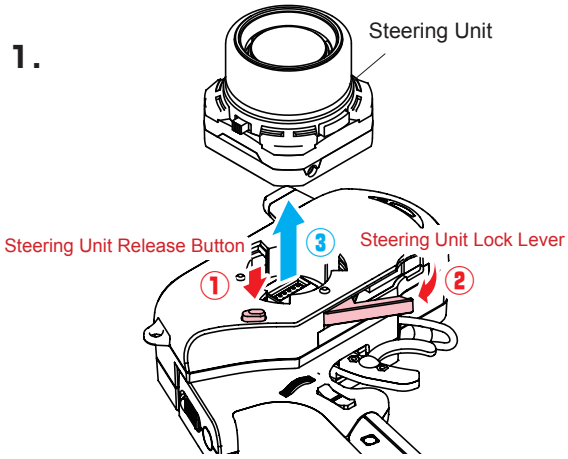

2.

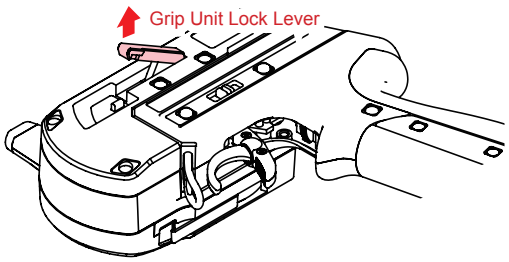

3.

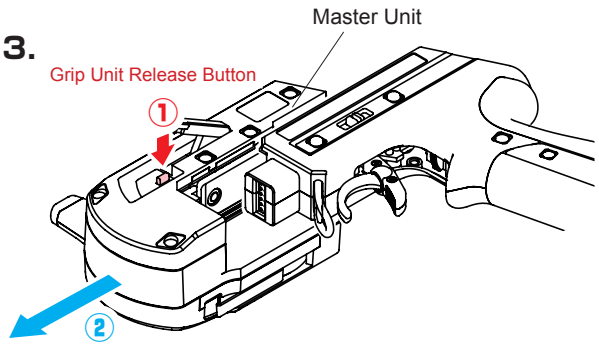

If storing the transmitter in dismantled form, please remember to attach the connector covers. (separately available option: Kondo Kagaku Co., Ltd.)

Assembly may differ with the included set contents.

■ Names of Parts

《Side View》

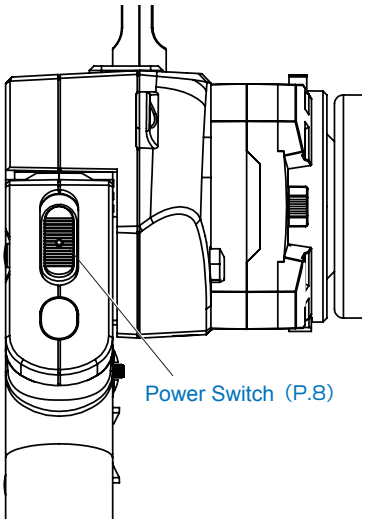

《Front View》

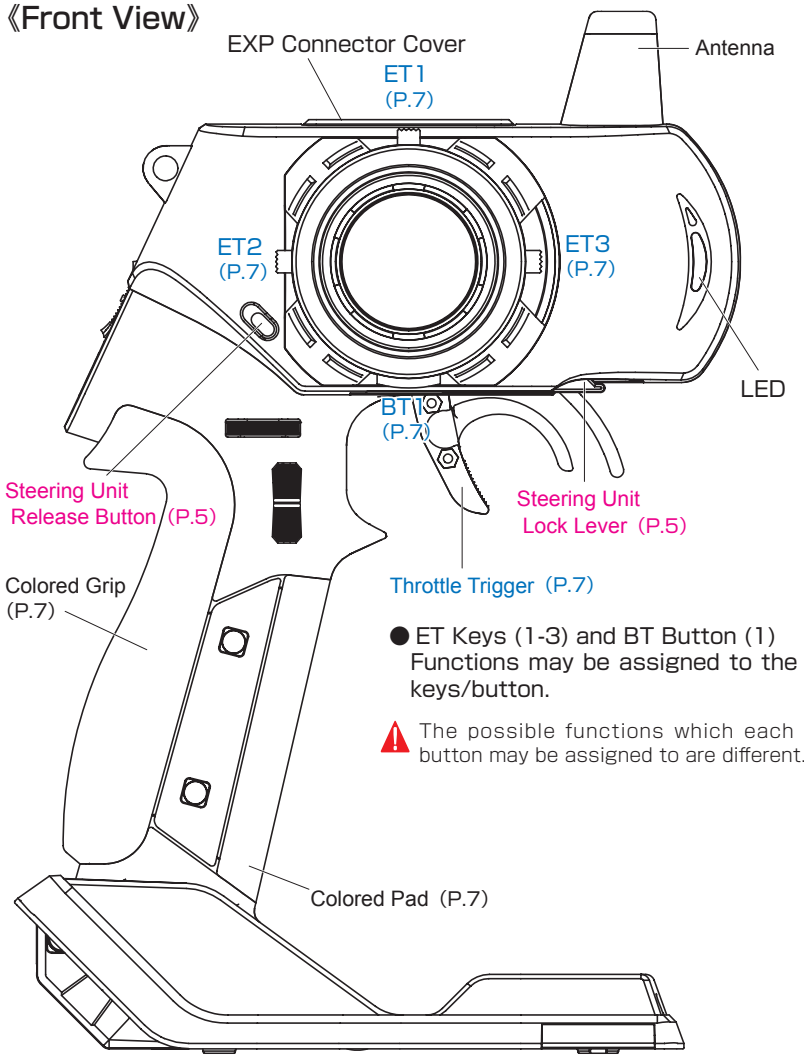

● ET Keys (1-3) and BT Button (1) Functions may be assigned to the keys/button.

⚠ The possible functions which each key/button may be assigned to are different.

《Rear View》

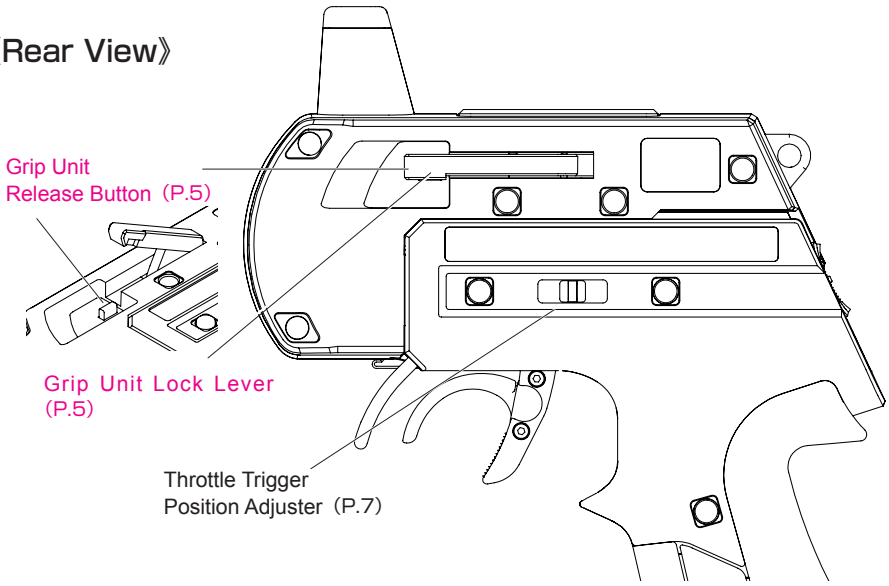

● ET Keys (1-3) and BT Button (1)

Functions may be assigned to the keys/button.

⚠ The possible functions which each key/button may be assigned to are different.

● Steering Wheel Adjustment

Adjust the tension of the steering wheel spring.

[How to Adjust]

Insert a 1.5mm hex wrench referring to the image below. Rotate clockwise to increase tension and counterclockwise to decrease it.

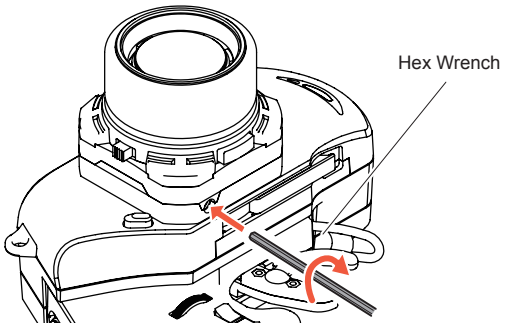

⚠ Excessive counterclockwise rotation will result in the wheel being unable to return to neutral position. In this case, rotate clockwise until the wheel returns to neutral.

● Wheel Cap Remove

Insert Wheel Cap Remover to the wheel cap spoke. Pull up Wheel cap remover with Wheel Cap.

Since the screw will appear If you remove the handle cap, it will be able to remove the steering wheel by removing the screw.

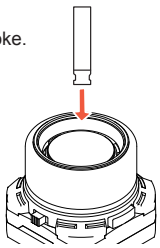

● Throttle Trigger Adjustment

Adjust the position and angle of the brake trigger to your preferences.

[How to Adjust]

①Loosen the hex screws on the throttle trigger with a 1.5mm hex wrench.

② Freely adjust the brake trigger position.

③ Tighten the hex screws to secure.

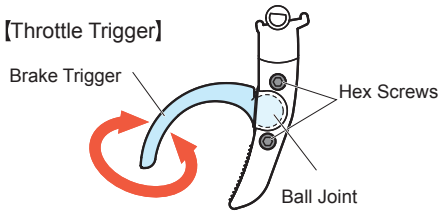

⚠ Temperature and aging, because it may become loose by the strong impact or the like, it is recommended that you adhere to such cases. In the case where there is a thing that would loose still, please contact the user consultation room.

● Throttle Trigger Position Adjustment

The position of the throttle trigger may be adjusted to match the user's hands.

[How to Adjust]

① Loosen two screws on the rear side of the transmitter.

② Slide the Throttle Trigger Position Adjuster as desired.

③ Tighten the loosened screws to secure.

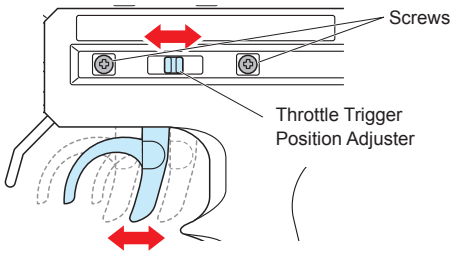

● Colored Grip and Pad Replacement

Colored grip pad (optional: Kondo Kagaku Co., Ltd.) and Large/small grip pad options are available.

《How to change》

Remove the two screws on each side of the grip to detach the grip plates, then attach the colored grip and pad.

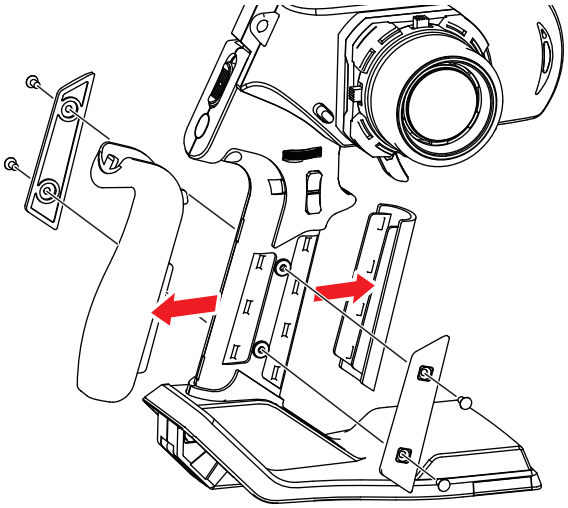

⚠ Make sure the battery box or battery pack is removed before replacing the colored grip and pad.

⚠ The tabs on the colored grip and pad are to be inserted into holes. Note the direction.

⚠ Note direction of the of the colored grip and pad

● Unit Connector

This product may be dismantled and therefore each unit features their respective connectors. Dirty or damaged connectors may result in malfunctions, so please handle them carefully.

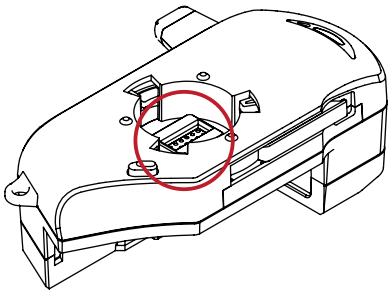

⚠ Do not touch the unit connectors with your fingers. If connectors become corroded due to grime, they may become inoperable. If storing the transmitter in dismantled form. After prolonged use, a black residue may build up on the connectors. Use cotton swabs dipped in cleaning alcohol to remove. In addition, we have repaired in our user consultation room.

● Power Switch

This product features a safety lock. The Master Unit and Grip Unit cannot be detached when the Power Switch is in the ON position. Turn off the transmitter before dismantling.

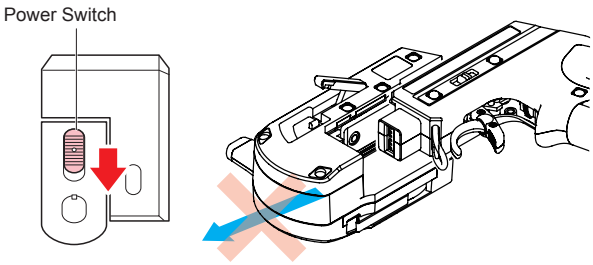

Preparations

Battery Installation

1. Press the tab on the bottom of the transmitter to open battery box cover.

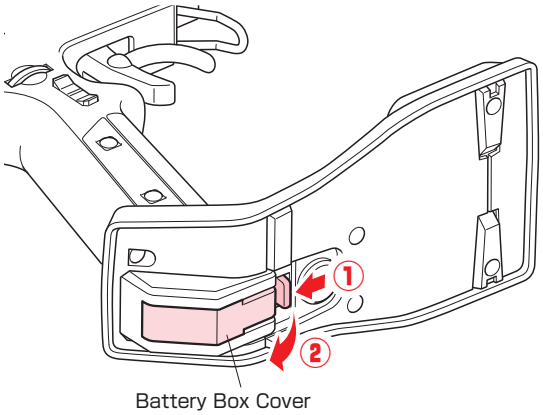

2. Remove the lock to pull out battery box.

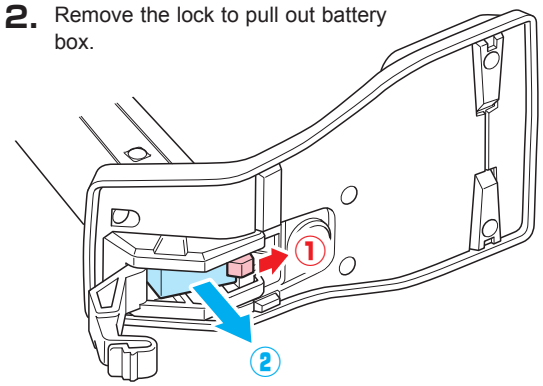

3. Install four R03/AAA/UM4 alkaline batteries while noting their polarity, then replace battery box.

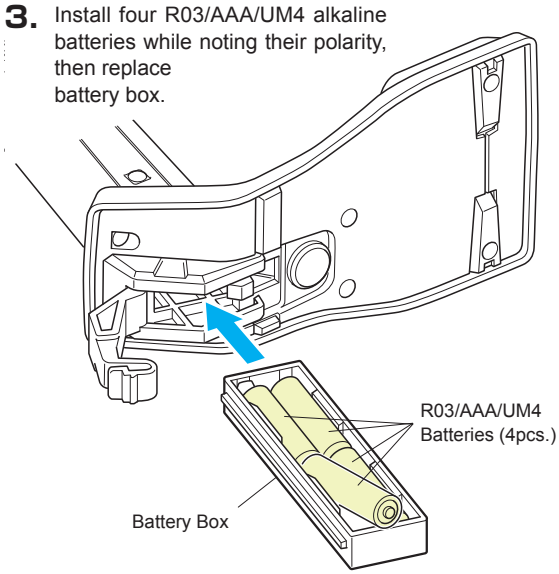

⚠ Use batteries which have adequate remaining capacity. Weak batteries mean lower transmitting power and may result in malfunctions.

⚠ Do not install Ni-Cd or Ni-MH batteries in the battery box. (These may cause the battery connectors to corrode.)

Battery Level Warning

A warning will be displayed with the LED flashing and an alarm will sound when battery voltage is less 4v. When you see this warning, stop your model in a safe area, turn it off and install new transmitter batteries.

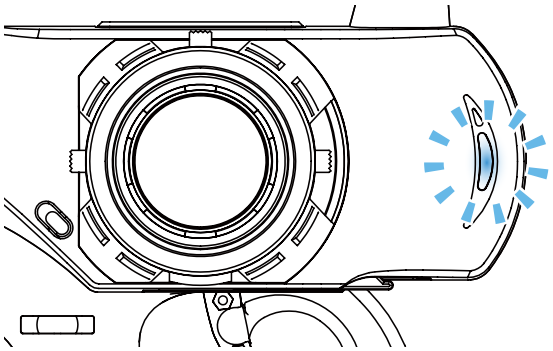

⚠ If the Xpansion unit is not assembled or used, do not use the LiFe/LiPo battery.

● Initializing EX-6

When using the EX-6 for the first time, please carry out the following settings.

※ EX-6 will not work normally if the initial configuration is not set.
※ This is an operation method when the expansion unit is not assembled.Initialization is necessary using a different method when expansion unit is put on, see p. 20 for more information.

1. Power on while operating ET2 lever below.

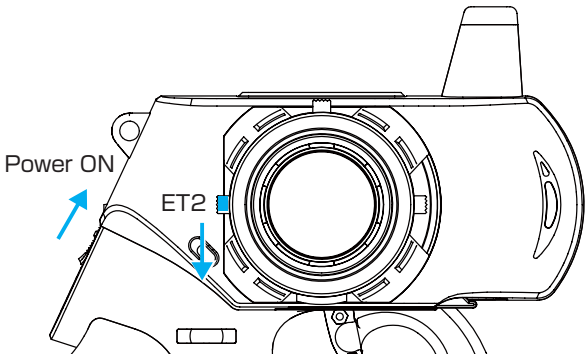

2. Hold the ET2 lever until the LED of EX-6 turns on (approximately two seconds).

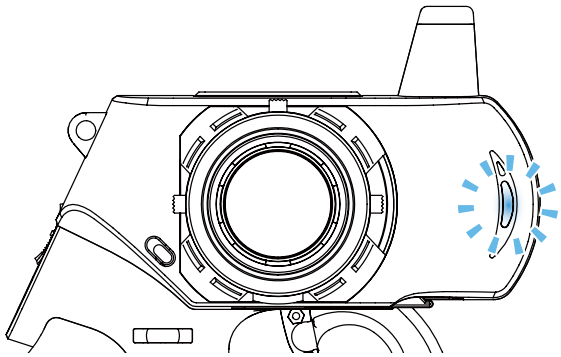

3. After the LED turns on, release ET2 lever. Buzzer sounds, and reset is completed.

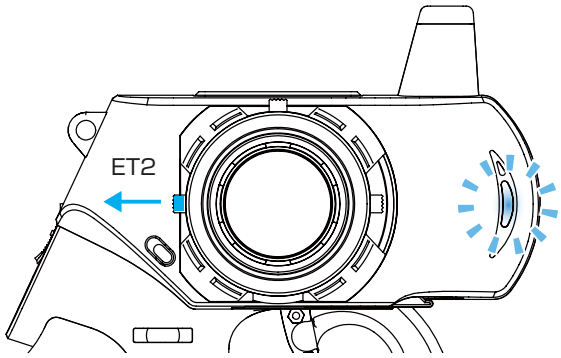

⚠ When changing each unit for a different unit, please perform this initialization again.

● How to change the Modulation mode

EX-6 has two Modulation modes.

※ When attaching the Xpansion unit, this operation is the same.

《Functions》
● MINI-Z ASF mode：LED Solid
ASF support of MINI-Z series is steerable.

● MINI-Z MHS mode：LED Flashing slowly
Oparating MINI-Z MHS mode. (MR-03 VE PRO)

⚠ Only MINI-Z with ASF/MHS system are operable. FHS (MINI-Z SPORTS) it will not be able to steer the.

① Turn off EX-6 switch.

② Push the ET1 lever to the left and power on.

③ Hold ET1 lever until the buzzer sounds and the LED of EX-6 turns on (approximately two seconds).

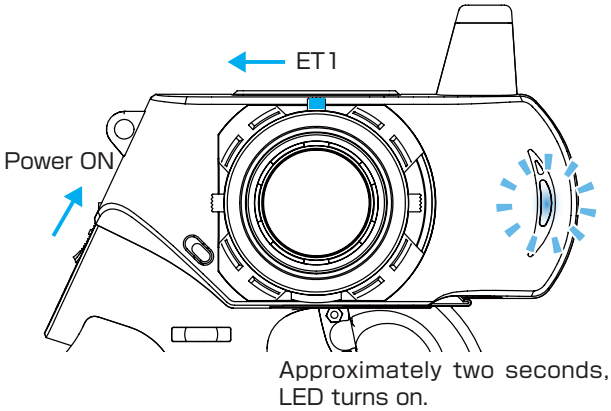

⚠ If the pilot LED is blinking fast, this is a warning that the battery voltage is low. Please change to new batteries or for a battery pack which has been charged.

● Pairing

Case without the Xpansion unit

※ Refer to p.21 pairing Operation in the case of using the Xpansion unit.

In order for the MINI-Z to operate, it must store the transmitter's unique ID in its memory in a process called "pairing." MINI-Z must go through the pairing process with the transmitter before being used for the first time.

※ Please adjust the Modulation mode before pairing.(p.10) A receiver does not work normally in different mode.

1.Preparing the Transmitter

① While pushing the ET2 lever up, power on.

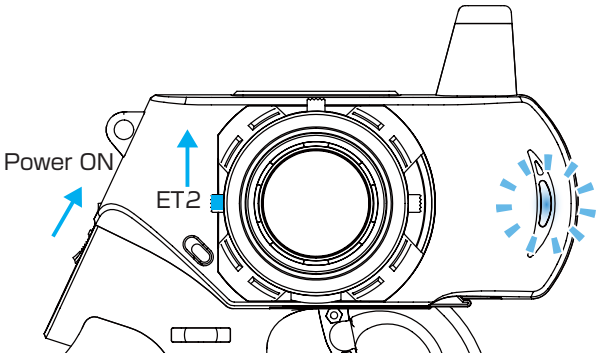

② When the ET2 lever is released, the LED turns of

<France mode pairing >
FRANCE mode pairing is possible when the ET2 lever is released after LED turns off. Please use this feature if the situation is needed.

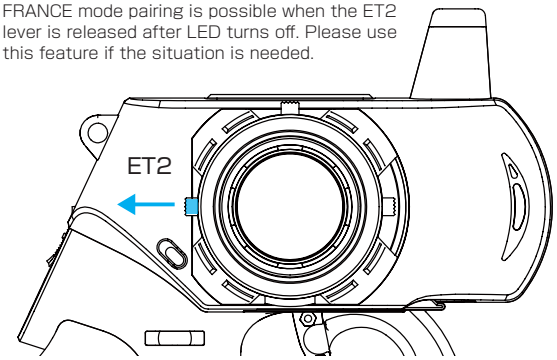

EX-6 LED lights up again (indicating transmitter is transmitting the pairing signal.)

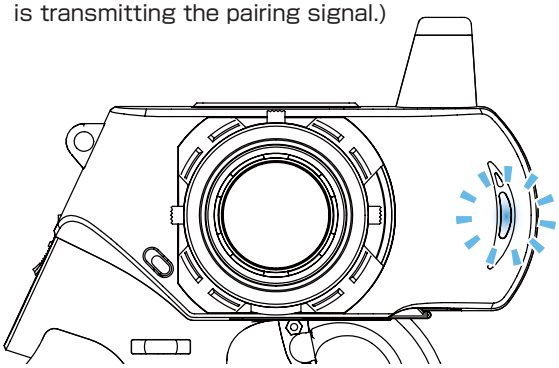

2. Preparing the MINI-Z

① Bring distance of EX-6 and MINI-Z close to about 10cm.

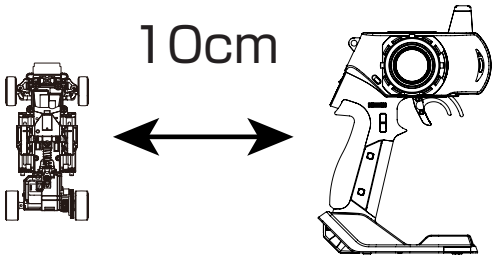

② Switch on MINI-Z while pushing the pairing button of MINI-Z.

Pushing pairing button

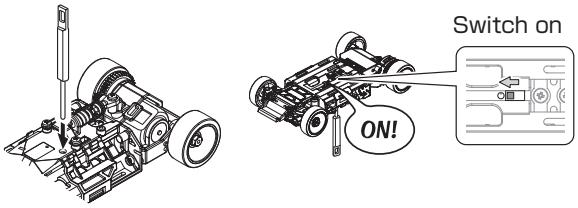

③ After the MINI-Z's LED has lit up, release the pairing button. Then check that the MINI-Z's LED lights up again (indicating pairing completion)

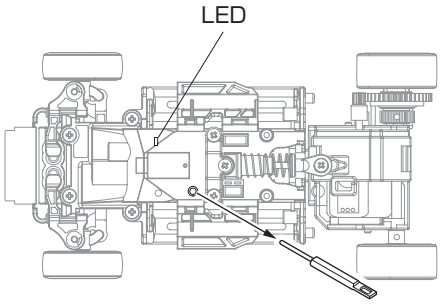

3. Preparations for Operation

① Switch off MINI-Z.

② Switch off the EX-6 main power, then switch on EX-6 again.

③ Bring distance of EX-6 and MINI-Z close to about 30cm. Switch on the MINI-Z and check that the receiver LED is lit. If the LED flashes, the MINI-Z is not getting the EX-6 signal and the pairing procedure should be repeated.

⚠ If the mode is changed (General or France), please conduct pairing procedures with the MINI-Z you are using again.

■ Procedures Prior to Operation

1.Switching On

After ensuring that it is safe to do so, switch on the transmitter followed by the MINI-Z.

2.Model Confirmation

Confirm the model which will be used.

3.Checking Movements

With the model's wheels lifted off the ground, operate transmitter to check for proper movement. While driving, use steering and throttle trims to make fine adjustments. Drive in a figure 8 pattern to check steering balance.

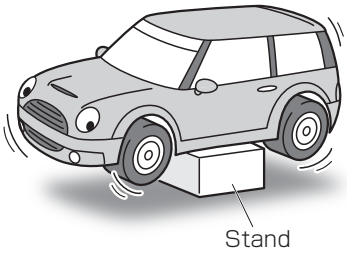

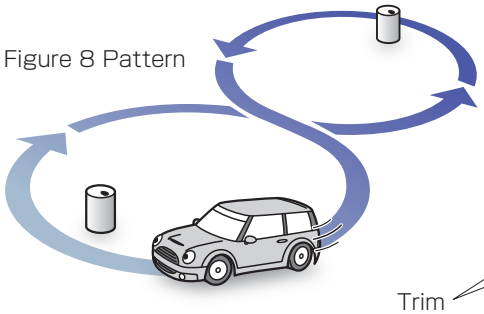

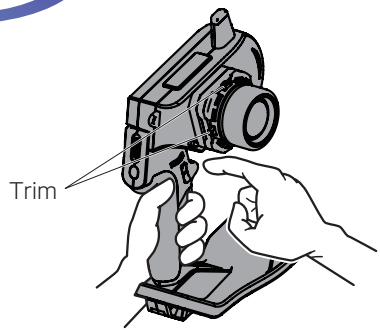

4.Switching Off

After a driving session, switch off the MINI-Z, followed by the transmitter. Remove the battery pack from the model.

⚠ After switching off, wait at least 5 seconds before switching on again to ensure proper operation.

● Trim and Sub Trim Operation

The sub trim is a convenient feature but it could also complicate the setting process if used incorrectly. Use the sub trim in the correct manner while also referring to the sub trim operation instructions on p.39 and p.44.

《Purpose of the Trim》

The trim I have adopted the center trim.

If you have performed an operation to trim as shown on the right, but the center position (neutral) will move, it does not change the left and right of the maximum steering angle.

In other words, it does not change the position of the left and right of the maximum steering angle to make adjustments of the straight by the trim.

However, we will be going to shift the balance of left and right and make adjustments by moving the big trim.

● Trim (Center Trim)

Adjusting neutral position only.

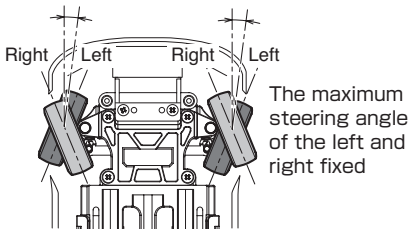

Initially, steering trim and throttle trim are assigned to ET1 and ET2 respectively.

《Purpose of the Sub Trim》

When performing the adjustment of the center position by using the sub trim, minutes you Shifts the center and then moved together by the same amount the position of the left and right maximum steering angle.

● Sub Trim

In conjunction with the center, move the maximum steering angle of the left and right together.

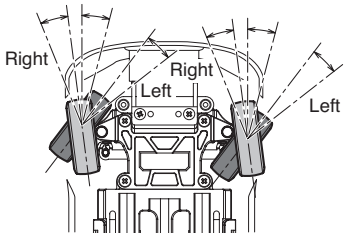

The sub trim is accessed via the steering menu.

《Actual Setting Sequence》

① Body throttle is in the neutral state is I make sure to stop completely. If, please stop the car body by using the throttle trim if the motor is not stopped.

② Front tire was visually before traveling to adjust by using the steering sub trim so that the center.

③ It is allowed to actually traveling to check and adjust the steering of the center. Adjust using the steering sub-trim as the body runs straight.

④ To quit traveling to check and adjust the steering angle of the steering by visual observation. When it was operated to full the handle of the transmitter to the left and right both, as the tie rod is actuated to just one cup, and then adjusted using the balance function (P.38).

⑤ Check and adjust the left and right of the turning radius is not actually running. When it is caused to travel by operating the steering wheel to the right and left full, by reducing the steering angle of the turning radius smaller side, to match the radius of the turning radius is larger side. (Reduce the numerical rotation radius of the small side in the balance function.)

⑥ Adjust the steering angle of your choice while traveling. The entire steering angle (adjusted left and right at the same time) use the steering travel (P.38).

⑦ When the center is shifted to running is corrected by using the steering trim (center trim).

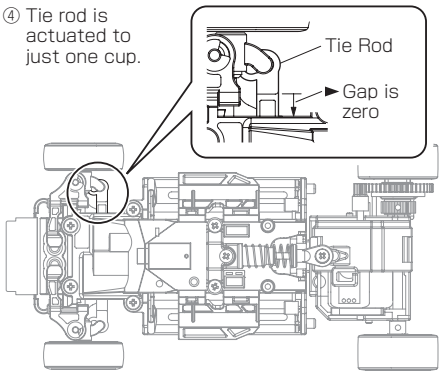

Use the sub trim to adjust settings prior to driving instead of the center trim.

If the neutral position becomes slightly off during driving, use center trim to correct.

■ operating procedure

※ EX-6 can be used even to remove the expansion unit.

● STEERING

※ Other than the operation explanation of the steering wheel,the following function explanation is in the case of not using the Xpansion unit. Refer to p.38 operation in the case of using the Xpansion unit.

■ Steering wheel

Operate on the left and right, the steering works.

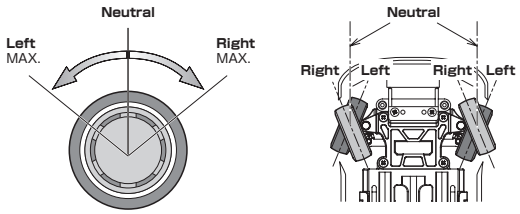

■ Steering trim (Center trim)

Adjusts the neutral/center position of the steering angle range. The function to make a fine adjustment so that a car goes straight, operate the ET1 lever in the right and left directions.

● A buzzer sound with a single beep sound when operated to the right and left.
● A buzzer sound "Piro" is made when the trim is at the center.
● When exceeding the setting range a "Pi-" sound can be heard.

< ex. Left >

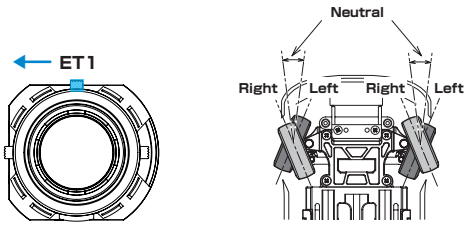

■ Steering reverse

If the direction of the steering is reversed, it will change the output method.
(when a steering moves to the left while turning the steering wheel to the right.)

① Hold the steering wheel all the way to the right .

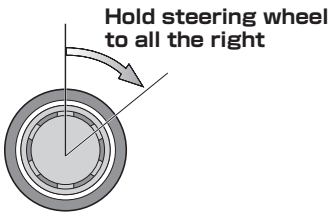

② Press and hold the ET1 lever to right, wait about 1 second.

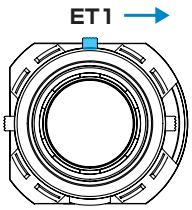

③ A single buzzer sounds and the steering directional movement is reversed.

※ Return reverse setting, perform operation ①～③ again.

■ Steering travel

Adjust the left/right steering angles independently. This enables the turning radius of each side to match up.

● Travel R
① Hold steering wheel to all the right
② Push ET1 lever by 1 click, adjust the range of Steering angle.

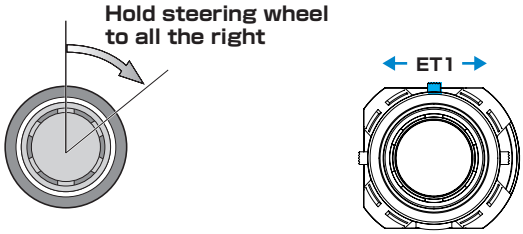

⚠ Do not hold the ET1 lever, or the steering reverse will be set.

● Travel L
① Hold steering wheel to all the Left
② Push ET1 lever by 1 click, adjust the range of Steering angle.

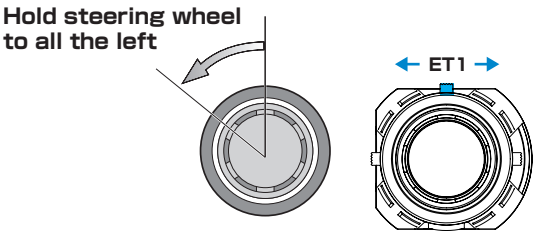

● THROTTLE

※ Other than the operation explanation of the trigger movement, the following function explanation in case of not using the Xpansion unit. Refer to p.43 operation in the case of using the Xpansion unit.

■ Throttle trigger

When is the draw in front (hold) operation, it will forward the vehicle body. When the operation of pressing, it works to the reverse side (brake).

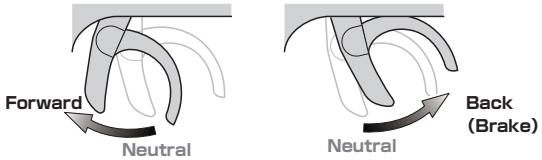

■ Throttle trim

Adjusts the neutral/center position of the throttle stroke range.The function to make a fine adjustment, operate ET2 lever in up and down.

● A buzzer sound with a single beep sound when operated up or down.

● A buzzer sound "Piro" is made when the trim is at the center.

● When exceeding the setting range a "Pi-" sound can be heard.

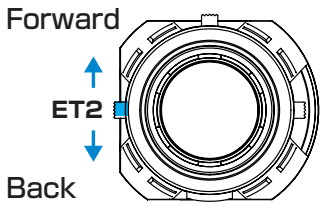

■ Throttle reverse

If the forward and the reverse of the direction is reversed, it will change the output method.
(when the brake is moving the forward throttle.)

① Hold throttle trigger full brake.

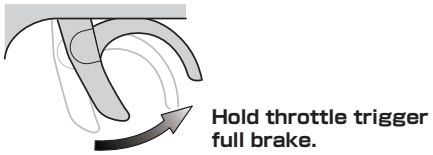

② Press and hold the ET2 lever down, wait about 1 second.

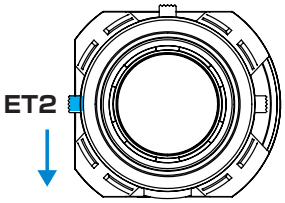

③ A single buzzer sounds and the throttle directional movement is reversed.

※ Return reverse setting, perform operation ①~③ again.

■ Throttle travel

We will adjust the operation amount of the front and rear of the throttle, respectively. It uses to adjustment and brake adjustment of the maximum speed.

● Travel F(Forward)

① Hold throttle trigger full throttle.

② Push ET2 lever by 1 click, adjust the range of throttle movment angle. Quantity of the movement increases and decreases when operating the ET2 lever up or down respectively.

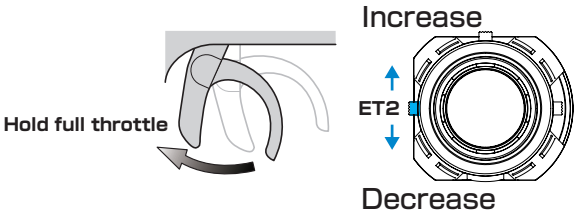

● Travel B(Brake)

① Hold throttle trigger full brake.

② Push ET2 lever by 1 click, adjust the range of throttle movment angle. Quantity of the movement increases and decreases when operating the ET2 lever up or down respectively.

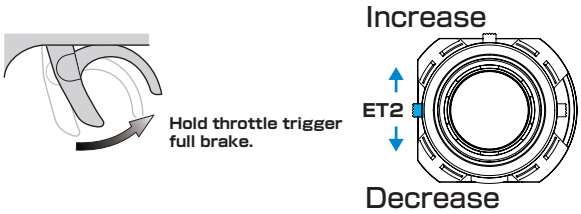

⚠ Do not hold the ET2 lever, or the steering reverse will be set.

● 3CH operation

Operating the ET3 lever, controls the 3ch servo.

※ The funtion explaination is in the case when not using the Xpansion unit. Refer to p.28 operation in the case of assembled Xpansion unit.

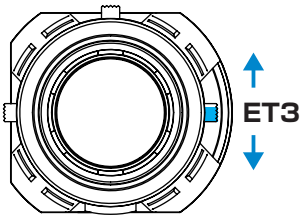

Example

① Use it for steering gyro gain (effect) control of MINI-Z MR-03VE PRO for MHS.

● 4CH operation

When the button of BT1 is operated, it is possible to operate the signal of 4CH.

※ The funtion explaination is in the case when not using the Xpansion unit. Refer to p.28 operation in the case of assembled Xpansion unit.

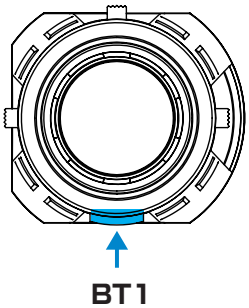

■ Display and Control Method with the Xpansion unit attached

● Basic Operations to Change Settings

Operation Controlling of the setting adjustments is done via the L(<) key, R(>)key, ENTER(ENT) key, and BACK key.

ENT Key: Selecting item to be modified; Confirming a change after a setting change.

L (<) Key: Used to move cursor between menu choices and to change a setting value.
Lowering a value (for L/R cases: raising toward L); Return to a previous menu item.

R (>) Key: Used to move cursor between menu choices and to change a setting value.
Raising value (for L/R cases: raising toward R); Proceed to next menu item.

BACK Key : Returning to previous screen; Canceling change

L(<) key + R(>) key Pressing simultaneously: Resets the value to default setting.

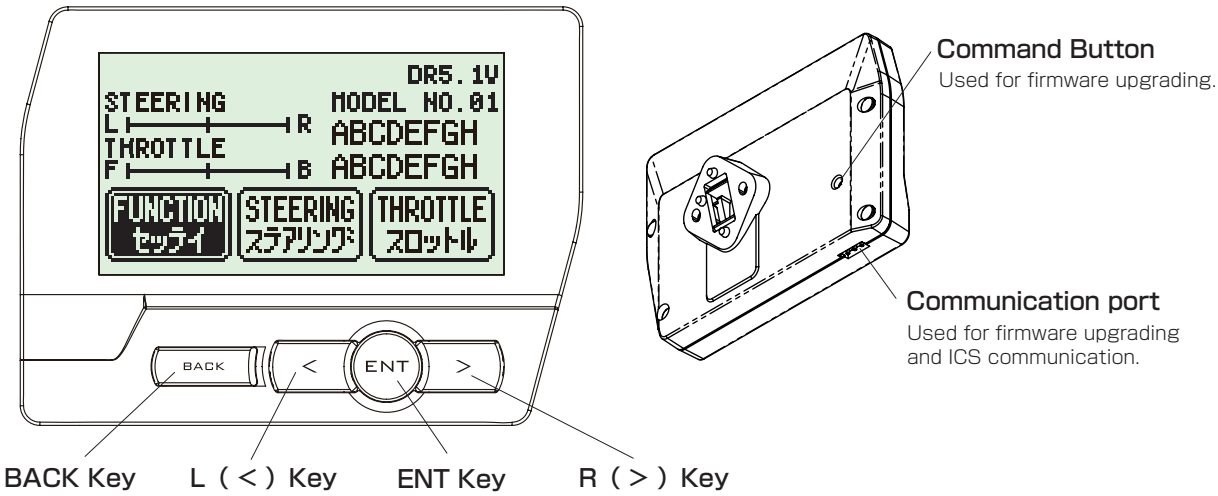

【 Basic Operation 1: Selecting from a Menu 】

This explanation uses [Steering] as an example.

① Use the R(>) key to move the cursor over [Steering].

② Press the ENTER key to change to the Steering Menu screen.

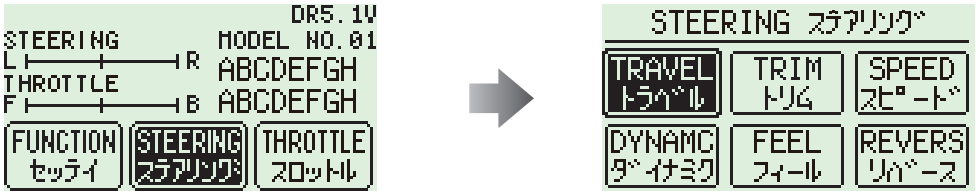

【 Basic Operation 2: Changing a Setting Value 】

This explanation uses [TURN 1] on the Steering Speed screen as an example.

① Use R(>) key to move the cursor over the 100% value next to [ST TURN].

② Press ENTER key to select it for modification.

③ Once selected, the cursor will blink. Now use the L(<)key+R(>)key to change the value.

④ After changing the value, press the ENTER key again to confirm the change.

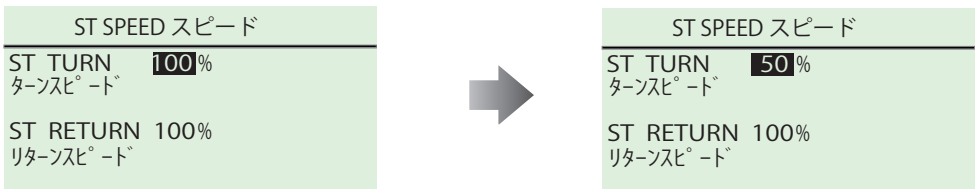

● Installation of expansion unit

※ Depending on the model, expansion unit has been installed at the factory.

Xpansion unit can be mounted facing the front or the side. The factory setting is mounted to the front.

⚠ Be careful to not misuse the M2.6-6BH and TP2.6-8BH screws.

Ⓟ Xpansioun unit can be mounted in two different directions using the monitor base and bracket.

A ▼ : setting to the front

① Attach the monitor base parallel to Xpansion unit. ※ Factory setting.

Attention to the marker.

M2.6-6BH
x 2

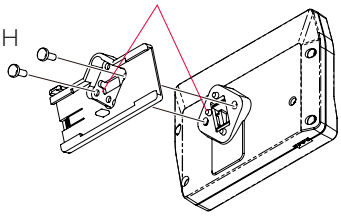

② Attach the monitor bracket to the master unit. ※ [**A ▼**] mark to the steering side

TP2.6-8BH
Self tapping screws
x 4

Connect the wire of the Xpansion unit to the master unit.

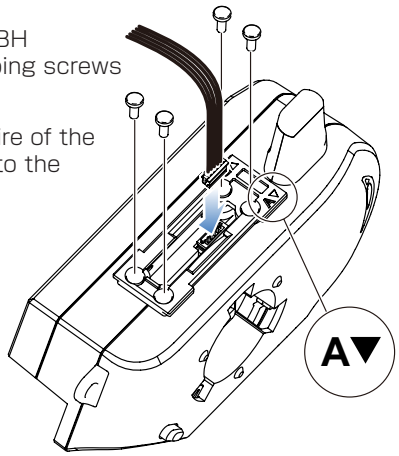

③ Attach expansion unit to the master unit.

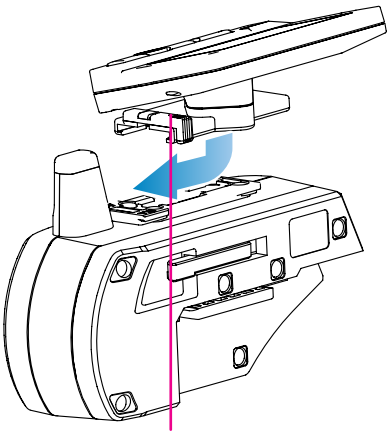

While matching the edge of the base with the dent of the bracket, slide it until the Xpansion unit locks.

▼ B : when mounting sideways

① Attach the monitor base at a right angle to Xpansion Unit. ※ Different Factory setting.

Attention to the marker.

M2.6-6BH
x 2

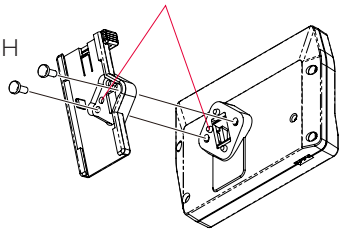

② Attach the monitor bracket to the master unit. ※ Apply [B ▼] mark to the steering side

TP2.6-8BH
Self tapping screws
x 4

Connect the wire of the Xpansion unit to the master unit.

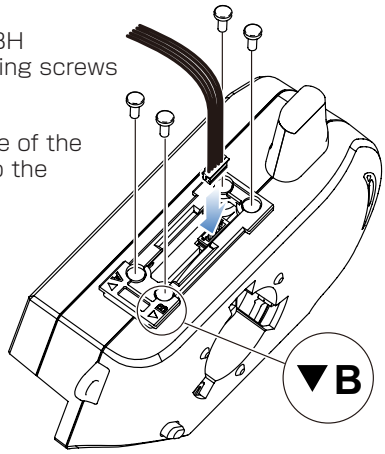

③ Attach the Xpansion unit to the master unit.
※ Attach the monitor base and bracket as shown in figure A ③ .

How to disconnect the Xpansion unit.

1.While pushing the monitor-based apart.
2.Slide the Xpansion like shown in the figure below and take off.
※ The disconnecting method is the same for side and front positions.

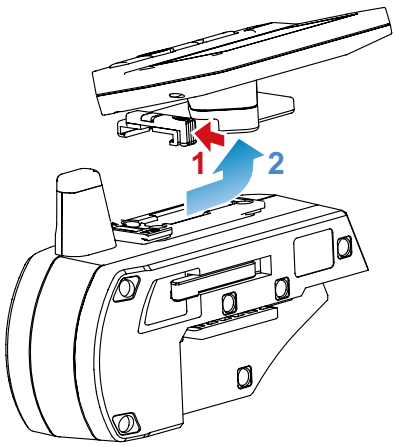

⚠ When connecting or disconnecting the Xpansion unit to EX-6, please switch off the EX-6.