Avantronics	丝印	Z-PNT1-5309-RX-V0	Logo:	Avantree	Date:	2025.10.22
			Version:	V0	Comfirm Date:	

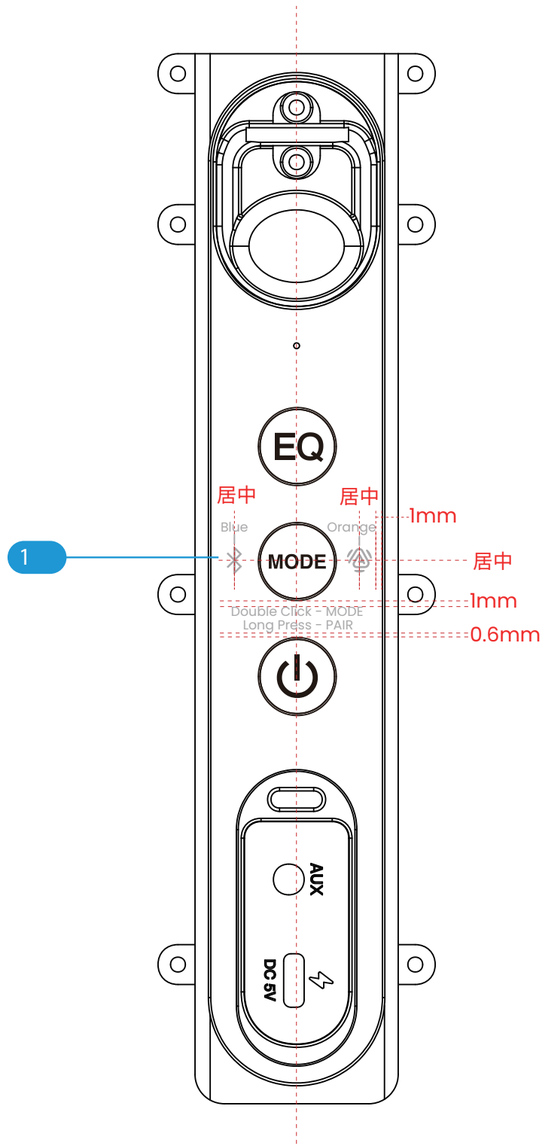

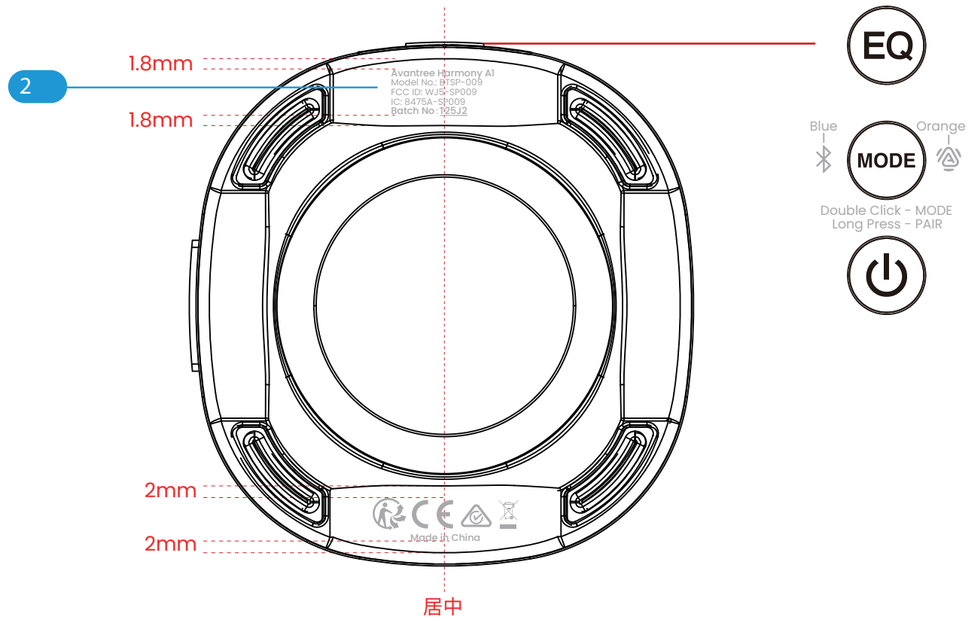

Graphics artwork (scaled 1:1)

1

Blue

Size: 4.8X 9.4mm
PANTONE Cool Gray 6C

Orange

Size: 8.6X 8.9mm
PANTONE Cool Gray 6C

Double Click - MODE
Long Press - PAIR

Size: 22.9X1.76 mm
PANTONE Cool Gray 6C

2

Avantree Harmony A1
Model No.: BTSP-009
FCC ID: WJ5-SP009
IC: 8475A-SP009

Size: 18.5X8.2 mm
PANTONE Cool Gray 6C

Made in China

Size: 25.5X7.4 mm
PANTONE Cool Gray 6C

Features

Scale: 1:1