Installation manual for Kathrein RFID UHF-Antennas

Low Range Antennas
Mid Range Antennas
SMSH Antennas / -modul
SMSH © KRAI Antennas / -modul
Wide Range Antennas
Wide Range © KRAI Antennas

This document is valid for all Kathrein RFID antennas and describes the construction and the installation of the antennas.

Version 2.52
date of creation: 01.06.2012
Document No. 936B059

KATHREIN RFID

RFID-UHF-Antennas

This manual applies to the following RFID UHF types:

Type:	Order number:
U-LoRa ETSI/FCC; Ultra Low Range antenna ETSI/FCC, 865-928 MHz	52010092
LoRa ETSI; Low Range-antenna ETSI, 865-870 MHz	52010084
LoRa FCC; Low Range-antenna FCC, 902-928 MHz	52010085

Type:	Order number:
MiRa ETSI; Mid Range antenna ETSI, 865-870 MHz, 100° circular	52010082
MiRa FCC; Mid Range antenna FCC, 902-928 MHz, 100° circular	52010083
S-MiRa ETSI/FCC; Short-Mid Range antenna ETSI/FCC, 865-928 MHz, 100° circular	52010172

Type:	Order number:
SMSH-30-30-antenna modul without protective cover	52010219
SMSH-30-30-KRAI-antenna with protective cover	52010258
SMSH-HighGain-30-30-KRAI-EU-antenna with protective cover	52010259
SMSH-HighGain-30-30-EU-antenna modul without protective cover	52010260

Type:	Order number:
WiRa 70° ETSI; Wide Range antenna ETSI, 865-870 MHz, 70° circular	52010078
WiRa 70° FCC; Wide Range antenna FCC, 902-928 MHz, 70° circular	52010079
WiRa-70-KRAI-ETSI; Wide Range © KRAI antenna ETSI, 865-868 MHz	52010193
WiRa-70-KRAI-FCC; Wide Range © KRAI antenna FCC, 902-928 MHz	52010194

Type:	Order number:
WiRa-40-linear-ETSI; Wide Range antenna 40°/40°, linear, ETSI	52010251
WiRa-40-linear-FCC; Wide Range antenna 40°/40°, linear, FCC	52010252

Type:	Order number:
WiRa 30° ETSI; Wide Range-antenna ETSI, 865-870 MHz, 30° circular	52010086
WiRa 30° FCC; Wide Range-antenna FCC, 902-928 MHz, 30° circular	52010087
WiRa-30-CSB-KRAI-ETSI; Wide Range Switch Beam © KRAI antenna ETSI, 865-868 MHz, 30° circular	52010227
WiRa-30-CSB-KRAI-FCC Wide Range Switch Beam © KRAI antenna FCC, 902-928 MHz, 30° circular	52010228
WiRa-30-linear-ETSI; Wide Range antenna 30°/70°, linear, ETS	52010248
WiRa-30-linear-FCC; Wide Range antenna 30°/70°, linear, FCC	52010249

The information in this manual was correct at the time of editorial deadline.
We reserve the right however to make changes at any time and without prior notice.

This document was prepared for specialist personal who install, configure and place in operation the reader.

Copyright notice

The reproduction or distribution of this document or extracts from it in whatever form and by whatever means (electronic or mechanical) for whatever purpose is permitted only with the prior written permission of Kathrein.

Kathrein accepts no liability for omissions or inaccuracies in this document or in relation to the provision or use of the information contained in this document. Kathrein reserves the right to change the products described in this document and does not accept any liability in relation to the application or usage of the products described in this manual.

This document and the information contained in it are proprietary information of Kathrein and should be treated as confidential. Kathrein provides this document to its customers in connection with contacts of sale for the products described therein. If the person in possession of this document, being a legal or natural person, is not a contractual sales partner of Kathrein, or Kathrein has not intended him by other means as the recipient of the document and the information contained therein, the person in possession is hereby informed that the use of this document is unlawful and a violation of the rights of Kathrein.

Scope

The information contained in this manual is intended for the support of the development process and as development guidance for the customer. In addition this manual offers supporting information about the standards to be applied at the place of installation and the relevant safety standards for installation and configuration of the Kathrein reader.

General information

This manual contains information on the installation, configuration, operation and maintenance of the reader. In addition it gives detailed technical data in order better to familiarise the user with the features of the reader.
In order to ensure a long working life and fault-free operation, this manual should therefore be read carefully and all the instructions and information contained in it should be complied with.

Warranty

Switching on the AC or DC power supply prior to connecting the LAN cable is considered incorrect installation. Any functional defect arising as a result is excluded from the warranty/guarantee. Before installing or servicing the reader, the person concerned must have read the manual and understood its contents. Kathrein accepts no liability if the customer fails to implement the precautions listed here. In such cases, any claims under the warranty/guarantee are void.

Disposal instruction

Electronic equipment is not classed as household waste and must be disposed of properly in accordance with Directive 2002/96/EC OF THE EUROPEAN PARLIAMENT AND OF THE COUNCIL of 27 January 2003 on used electrical and electronic equipment.
At the end of its service life, take this device for disposal at a designated public collection point.

Used batteries are special waste!
Do not put used batteries into your domestic waste; instead take them to a collection point for used batteries!

Abbreviatiions used in Application note:	
CK	Connecting Kit
CSB	Circular Switsch Beam
DIN	Deutsches Institut für Normung (German Institut for Standardisation)
EIFF	Effective Isotropic Field Factor EIFF shows the field isoltaion from far-field to near-field in realation to the isotropic monopole
EIRP	Equivalent Isotropically Radiated Power
EN	Europäische Norm (European standard)
ERP	Effective Radiated Power
LoRa	Low Range
MiRa	Mid Range
PoE	Power over Ethernet
RFID	Radio Frequency Identification
PLS	Polarisation Switching
SAR	Spezific absorption rate
SMSH	SMSH © KRAI planar antenna module
S-MiRa	Short Mid Range
UHF	Ultra High Frequency
U-LoRa	Ultra Low Range
WiRa	Wide Range

RFID-UHF antennas **2**

Foreword and gernaral information **3**

List of contents **4**

1. Saefty instruction /-informationen **7**

2. Introduction **8**

2.1. RFID UHF antennas 8

2.2. Scope of supply 8

2.3. Accessories 9

3. Product description **10**

3.1. Low range Antennas 10

3.2. Mid range Antennas 10

3.3. SMSH antennas / -module 10

3.4. Wide range Antennas 11

3.5. © KRAI Antennas 13

3.6. Antenna type according to read range and transponder shape 12

3.7. Maximum reading range 13

4. Technische daten **14**

4.1. Ultra-Low range and Low range antenna 14

4.2. Short-Mid range antenna 16

4.3. Mid range antennas 18

4.4. SMSH © KRAI planar antenna module 20

4.5. Wide range 70° antennas 21

4.6. Wide range © KRAI 70° antennas 23

4.7. Wide range 30° antennas 25

5. Installation **27**

5.1. Connecting Kit for Reader 27

5.2. Cable laying 27

5.3. Wall/mast clamp 28

5.4. Assignment Wall/mast clamp to antennas and readerse 29

5.5. Installation drawings 30

6. Contact address 33

Key

⚠ **Caution**	Indicates a potentially dangerous situation which, if disregarded, can lead to injuries ranging from minor to severe and/or damage to the unit.
Note	Information intended to make a specific topic easier to understand and/or enable optimal use of the unit functions.

General safety notes

⚠ **Important!**

Before starting installation work or replacing the unit, the accompanying manual must be read carefully and its contents understood.

The detailed information in the data sheets and in this manual must be complied with carefully during installation and operation of the reader!

The installation team must be properly qualified and familiar with the safety regulations applicable in the country concerned.

Connection, installation and maintenance work, as well as all other work on the unit, may only be carried out by properly qualified and trained employees.

The unit may only be used for the purpose intended by the manufacturer.

Unauthorized changes to the unit and the use of spare parts and peripheral devices which are not sold or recommended by the manufacturer can result in fires, electric shocks and injuries. Such actions therefore result in exclusion of liability and make the manufacturer’s warranty/guarantee null and void.

The applicable version of the manufacturer’s warranty is that which was valid at the time of purchase. We accept no liability for unsuitable manual or automatic adjustments made to the unit's parameters and inappropriate use of the unit.

Repairs may only be undertaken by personnel authorised to perform them. Opening or attempting to repair the unit makes all guarantee/warranty claims null and void! Improper work on the unit may jeopardise electrical safety.

The manufacturer is not liable for accidents caused by the user opening the unit!

When carrying out work on the unit, the valid safety regulations must be complied with.

Supply voltage

⚠ **Important!**

Make sure that the mains cable (power supply cable) is not damaged. If the mains cable is damaged, the device must not be used. Instead it must be disconnected from the mains and repaired by a qualified technician. Use only the power supply unit supplied!

Risk of fatal injury due to electric shock!

The device may be operated only at the stated supply voltage (see the rear of the device or external power supply unit)!

If the supply voltage is too high, there is a risk of fire!

2.1. RFID UHF antenna

The new Kathrein antenna family consists of various UHF reader antennas, which can meet the needs of virtually any RFID application.

The antennas are divided into three product lines with respect to the reading range: low range, mid range and wide range antennas.

This allows to up 4 antennas are used simultaneously in any combination with Kathrein RFID reader. This modularity is only possible with Kathrein RFID readers and antennas.

2.1.1. Standard antennas

Die abgebildeteten Antennen stellen je Beispiele aus der jeweiligen Antennenserie da.

Weitere Informationen finden Sie unter 3. Produktbeschreibung.

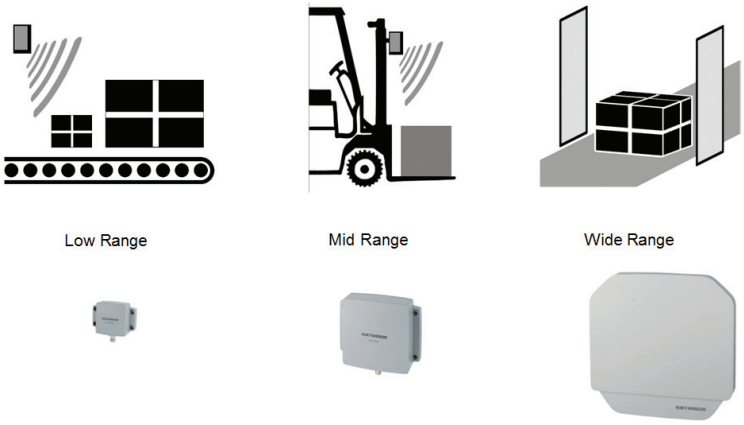

0 to 10 cm - with Low Range antenna
20 cm to 2 m - with Mid Range antenna
1 m to 10 m - with Wide Range antenna

2.1.1. © KRAI Antennen

CSB antennas

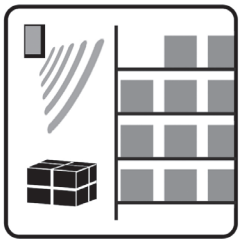

SMSH antennas

Wide Range antennas

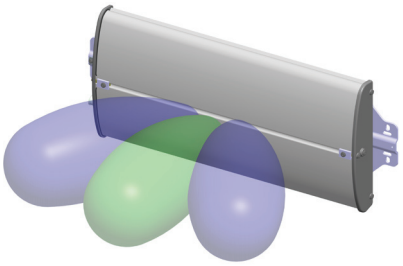

Die © KRAI-Antennen werden über © KRAI Reader angesteuert. Dabei können die keweiligen Funktionen

- Kaskadierung
- Beam Switching
- Polarisierung

dynamisch ausgewählt werden.

2.2. Scope of supply

The package content includes the following:

- 1 antenna
- associated technical data sheets

In the delivery of antennas is included no cable. These must be ordered separately.

2.3. Accessories

The following accessories are available for the reader (if you have questions about the accessories, please contact our Sales Office):

- Antennas: For use with UHF-RFID antennas; we recommend the Kathrein RFID antenna types ULoRa, LoRa, MiRa, WiRa. These antenna types are available for all frequency ranges.The mentioned types of antennas are available for all frequency ranges and in protection class IP 65

- **Antenna cable**

Order number	Type	Connector 1	Connector 2	Lenght (cm)
52010174	R-AC 3 TNC-TNCR	TNC	TNC Reverse	LL240 flex, 300
52010175	R-AC 6 TNC-TNCR			LL240 flex, 600
52010176	R-AC 10 TNC-TNCR			LL240 flex,1000
52010177	R-AC 15 TNC-TNCR			LL240 flex,1500
52010178	R-AA TNC-N(f-m)	TNC (socket)	N-(Socket)	
52010250	R-AC-15-N-TNCR	N (Socket)	TNC (Socket)	LL400 flex, 1500
52010090	R-AC 3 SMA-TNCR	SMA (socket)	TNC (socket)	RG 58, 300
52010208	R-AC 05 SMA-SMA	SMA (socket)	SMA (socket)	RG 58, 50

- **Cable sets (without antenna cable)**

Order number	Type	Product type
For use only RRU and ARU Reader:		
52010125	CK-RRU RS4	Power supply cable M12/open, length 1.5 m, RS 422/485 interface cable M12/open, length 1.5 m, 2 x GPIO cable M12/open, length 1.5 m
52010126	CK-RRU ETG	Power supply cable M12/open, length 1.5 m, Ethernet interface cable M12/RJ 45 socket, length 1.5 m, 2 x GPIO-Kabel M12/offen, length 1.5 m
52010189	CK-M-ARU RS	Connecting cable M-ARU RS232, length 1.5 m
52010239	R-CC 10 GPIO	GPIO Connecting cable RRU4/ARU4, length 10 m
52010240	R-CC 10 DC	Power Connecting cable RRU4/ARU4, length 10 m
For use only M-ARU Reader:		
52010189	CK-M-ARU RS	Combination cable for power supply GPIOs and RS232 interface, M12/open, length 1.5 m
52010209	CK-M-ARU PoE	Combination cable for power supply and PoE interface, M12/RJ 45, length 1.5 m
52010238	R-CC 10 ETH	Ethernet Connecting cable RRU4/ARU4/M-ARU, length 10 m
52010241	R-CC 10 RS	M-ARU Connecting cable RS, length 10 m

- **Mounting Accessories**

Order number	Type	Product type
52010005	MK-WiRa30	Wall mount/mast mounting set for 30° WiRa antennas
52010128	MK-ARU WiRa70	Wall mount/mast mounting set for RFID antennas and RRU4/ ARU4-readers (to 6.0 kg total weight).
52010261	MK-WM-100-100-Indoor	Wal mounting set for WiRa 70° antennas and RRU-, ARU-Reader; Indoor
52010262	MK-WM-100-100-Indoor	Wall mount/mast mounting set for WiRa 70° antennas and RRU-, ARU- Reader; Indoor

- **Readers power supply**

Order number	Type	Product type
52010179	R-RPA 115-230V/24V	RRU / ARU 230V power supply with safty plug (Lörar); 24V DC power supply with M12 socket 4-pin, A-coded
52010192	R-ERPA 115-230V/24V	ERU 230V power supply 24V DC cable plug connector 2.5 mm

- **Protective Covers**

Order number	Type	Product type
52010127	Protective covers set for the RRU and ARU reader series	Accessories for RRU4/ARU4 reader with screw caps for 3x antenna input (R-TNC) and 2x digital (M12)

3.1. Low range antennas

The low range antennas are a highlight of the new antenna series. With dimensions of 90 x 63 mm, these antennas have a high field concentration in the near-field, with significantly reduced antenna gain in the far-field. With these properties, the antennas achieve outstanding writing/reading performence at ranges of up to 10 cm with a typical selectivity of 5 cm. Low range antennas are available in LoRa (Low Range) and ULoRa (Ultra Low Range). The ULoRa was designed to read dipole-shaped tags (“far-field tags” at an extremely limited distance.
These antennas can also read loopshaped tags (“near-field tags”) up to 3 cm. The LoRa was developed for larger ranges and is particularly suited to near-fi eld tags.

Figure 1: Low range antenna

Figure 2: Ultra-Low range antenna

3.2. Mid range antennas

The MiRa 100° was developed for applications in the area between nearfi eld and far-fi eld. Particular importance was placed on creating a compact construction to enable integration into environments with limited space. Read ranges of over 2 m are still possible even with dimensions of 156 x 126 mm. MiRa also offers increased selectivity at lower reading distances compared with conventional antennas. This antenna design is therefore also suitable for use in the so-called transition area with a variety of transponder types

Figure 3: Short-Mid range antenna

Figure 4: Mid range antenna

For short range to offer the S-MiRa antenna that is optimized with the same basic Paramenter for angle and transmission level as our standard mid range antenna, small reading range to 1.0 m.

3.3. Smart Shelf antennas

The SMSH 30-30-KRAI slave antenna was developed for applications in the field of point of sale, smart shelf applications and Kanban solutions. The antenna is characterized by an extremely homogeneous read zone, which is emitted by the high front to back ratio. Therefore it is suitable for static detection of multiple transponders. Due to their extremely thin design, the antenna module can be integrated into different applications universal.
The antenna is equipped with an intelligent bypass circuit that allows for cascading up to 8 SMSH modules per reader port. The control is done by a suitable © KRAI Kathrein RFID reader, the © KRAI control signals are transmitted via the standard antenna cable

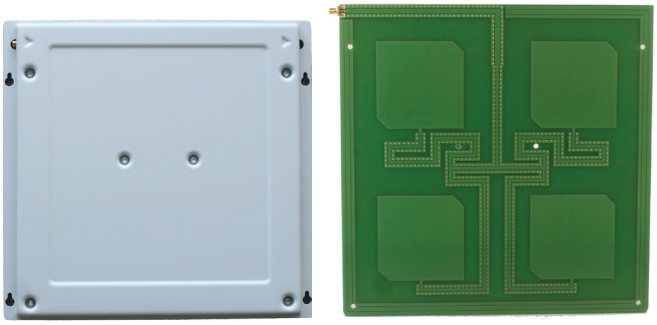

Figure 5: SMSH with protectiv cover / SMSH without protectiv cover

3.4. Wide Range antennas

For the standard wide range applications with read ranges up above 10 m Kathrein offers wide range antenna types, which are characterized by a beam width of 70° (WiRa 70), 40° (WiRa 40) and 30° (WiRa 30) and a circular or linear polarization

antenna typ	Order number	Öffnungswinkel	Polarisation	Frequenzbereich
WiRa 30 ETSI	52010086	30°	circular	865 – 868 MHz
WiRa 30 FCC	52010087	30°	circular	902 - 928 MHz
WiRa 30 - linear ETSI	52010248	30°	linear	865 – 868 MHz
WiRa 30 - linear FCC	52010249	30°	linear	902 - 928 MHz
WiRa 40 - linear ETSI	52010251	40°	linear	865 – 868 MHz
WiRa 40 - linear FCC	52010252	40°	linear	902 - 928 MHz
WiRa 70 ETSI	52010078	70°	circular	865 – 868 MHz
WiRa 70 FCC	52010079	70°	circular	902 - 928 MHz

For standard UHF applications a circular polarization is used, when the orientation of the transponders is not known, or may occur a randomly. This circular polarization was significantly improved in comparison to the antennas available on the market. For the so-called axial ratio, which is used as a characteristic value for circular polarization, the two new models achieve typical values of 1 dB. If specifi ed at all, the usual value on the market lies at around 3 dB. The improved circularity of the Kathrein wide range antennas leads to a significantly reduced influence of the read results caused by the position or orientation of the transponder.

Linearly polarized antennas are used for UHF applications, if the orientation of the transponder is fixed and well defined. In this case, the lower polarization loss of linear antennas will lead to bigger read range.

Great importance was also placed on the front-to-back ratio of the antennas to reduce
the influence of the adjacent (installation) environment on the antenna properties.

All antennas have an extremely high protection class which guarantees problem-free use in any environment.

The use of high-quality materials for a long service life and high levels of reliability contribute to the optimal performance provided by the antennas under even the most challenging of conditions.

Figure 6: Wide Range 70° antenna

Figure 7: Wide Range 40° antenna

Figure 8:
Wide Range 30° antenna

3.5. © KRAI Antennen

With © KRAI (Kathrein RFID Antenna Interface) the electrical feature of a © KRAI RFID Antenna can be controlled by a © KRAI Reader via the existing standard Coaxial cable. The configuration of the reader will be installed with the Kathrein ReaderStart SW V2.xx.

3.5.1. © KRAI SMSH (Smart Shelf-) antenna

The SMSH 30-30-KRAI slave antenna was developed for applications in the field of point of sale, smart shelf applications and Kanban solutions. The antenna is characterized by an extremely homogeneous read zone, which is emitted by the high front to back ratio. Therefore it is suitable for static detection of multiple transponders. Due to their extremely thin design, the antenna module can be integrated into different applications universal. The antenna is equipped with an intelligent bypass circuit that allows for cascading up to 8 SMSH modules per reader port. The control is done by a suitable © KRAI Kathrein RFID reader, the © KRAI control signals are transmitted via the standard antenna cable.

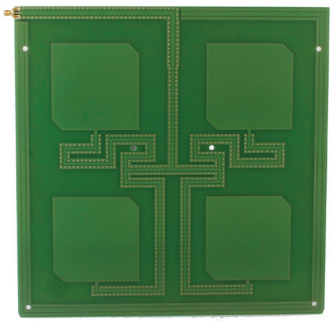

Figure 9: SMSH antenna

3.5.2. © KRAI PLS (Polarisation Switching-) antenna

With the © KRAI PLS-Antenna, build as a WiRa 70° Antenna, the polarization can be switched static or dynamically. The following settings are possible in any combination:

- Circular LHCP
- Circular RHCP
- Linear horizontal
- Linear vertical

For Wide Range application the best polarization can be selected. A flexible adjustment of the antenna on site is possible.

In addition the read rate can be increased via the switching circular LHCP / RHCP by up to 30%.

For direct access programming 4 LEDs are free for visualization.

Figure 10: Wide Range © KRAI 70° antenna

3.5.3. © KRAI CSB (Circular Switch Beam-) antenna

With the ©KRAI CSB-Antenna, build as a WiRa 30° antenna, the antenna beam can be switched static or dynamically. The following settings are possible in any combination:

- Antenna beam initial position (radiation 90°of the Antenna)
- Antenna beam switched 35° to the left
- Antenna beam switched 35° to the right

The orientation of switching is in the longitudinal direction of the antenna. On the connector side of the antenna the position “RIGHT” is defined.

These CSB antennas are used to detect the movement of the transponder. This information will be transferred in combination with the collected transponder is. With 5 antenna sweeps per second, two or more reads are used to determine the direction of movement.

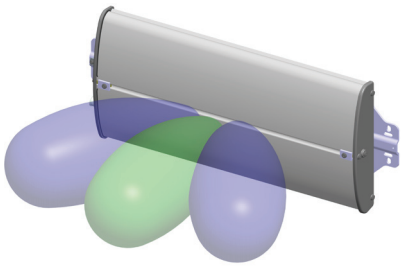

Figure 11: Wide Range © KRAI CSB 30° antenna

Note

Please note that the Beam „R“ is assigned (right) getting the connection side.

3.6. Antenna type according to read range and transponder shape

Antenna type	Read range	Tag type		
		Loop-shaped	Hybrid	Dipole-form
LoRa ULoRa	0-10 cm			
SMiRa, SMSH	0-10 cm			
	10-100cm			
MiRa	0-30 cm			
	30-100 cm			
	> 100 cm			
WiRa 70°, WiRa 40, WiRa 30° linear, WiRa-30-CSB-KRAI	0-30 cm			
	30-200 cm			
	> 200 cm			

The correct combination of reader antenna and transponder is essential for every RFID application. The correct selection ensures a high read rate and reliable operation of the system.

The LoRa and ULoRa antennas can read loop-shaped, hybrid-form and dipole-form transponders up to 10 cm and offer a very well defi ned read range.

The Smart shelf and SMIRA read the hybrid transponders at distances up to 10cm and the dipole type transponders at distances up to 100cm.

MiRa can read loop-shaped transponders up to 30 cm, hybrid-form transponders up to 100 cm and dipole-form transponders up to several metres.

The WiRa antennas ans WiRa-30-CSB-KRAI antennas are designed for typical dipole-form transponders with read ranges of up to 10 m, but they can also read loop-shaped and hybrid-form transponders at a short distance.

The typical read ranges of the antennas described can be seen in the following figure. If WiRa 30° and WiRa 70° are operated with the same ERP, the maximum ranges of the two antennas are equal, although the WiRa 30° has a higher selectivity.

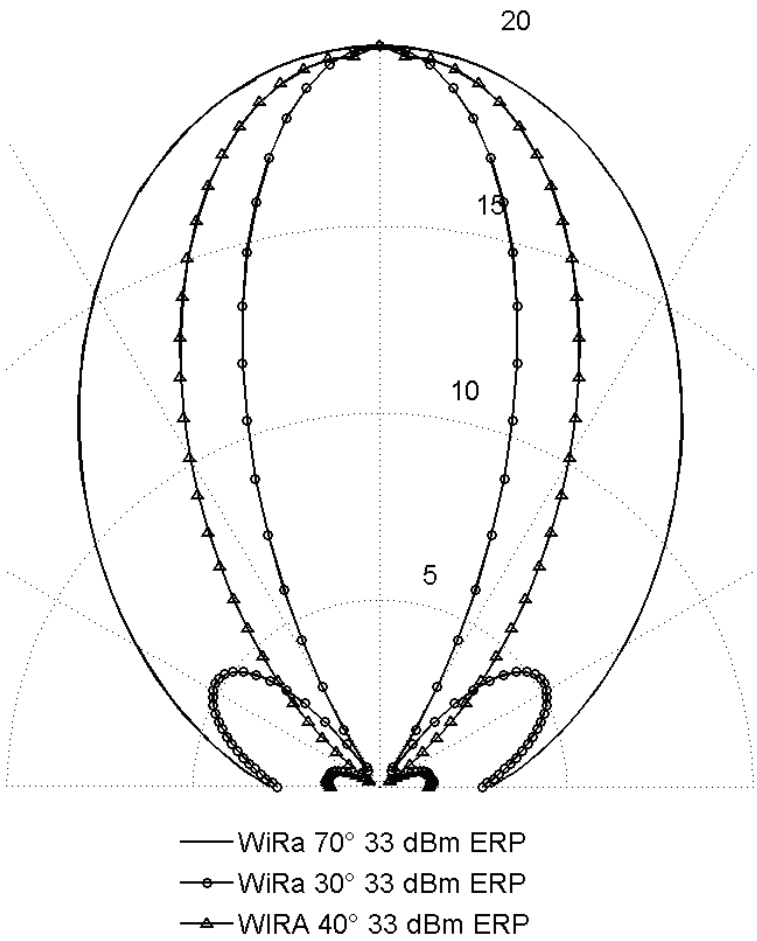

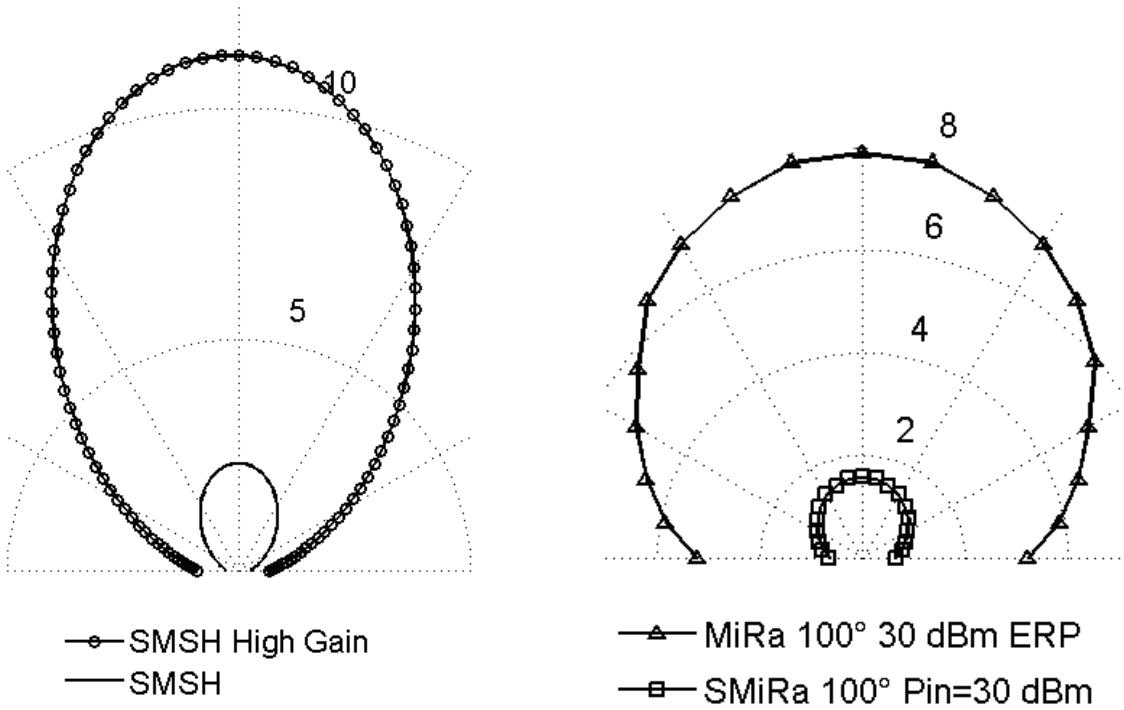

Note

To achieve the best reading and writing results, we recommend operating the Kathrein UHF RFID reader antennas exclusively with UHF readers from Kathrein.

As a further option, it is possible to integrate the modular Kathrein RFID UHF reader latform in the WIRA antennas to also provide a powerful single read point for certain applications. As a result of the consistent continuation of the platform strategy for antenna and reader, all product and interface variants already introduced are available in numerous combinations. Cost-effi cient adaptation to varying customer requirements is therefore possible as a result. For all variants protection class IP 67 and an operating temperature range from -20 to +55 °C apply. A TNC socket is used as the antenna interface on all types.

3.7. Maximum range

Note

For maximum range there must not be any interfering objects between the antenna and the tag to be read.

4. Technical data

4.1. Ultra-Low range and Low range antennas

Type		U-LoRa (ETSI/FCC)	LoRa (ETSI)	LoRa (FCC)
Order number		52010092	52010084	52010085
Frequency range	MHz	865-928	865-868	902-928
Antenna gain	dBi	-30	-15	-15
EIFF*)	dB	15	20	20
VSWR		<1.2:1	<1.3:1	<1.8:1
Impedance	Ω	50	50	50
Range of near field tags **)	cm	3	7	7
Selectifity of near field tags **)	cm	3	5	5
Range of far field tags **)	cm	8	-	-
Selectifity of far field tags **)	cm	10	-	-
Max. input power ***)	W	1	0.5	0.5
Connection		TNC socket	TNC socket	TNC socket
Protection class		IP 67	IP 67	IP 67
Weight	g	110	110	110
Dimensions (W x H x D)	mm	79,5 x 90 x 31	79,5 x 90 x 31	79,5 x 90 x 31
Packing dimensions (approx.)	mm	165 x 250 x 50	165 x 250 x 50	165 x 250 x 50
Material	Tough, weather-resistant polymer blend; Colour: RAL7045			
Installation	Four through-holes Ø 4.2 mm for M4 screws			
Operating temperature range	°C	-20 to +55		
Storage temperature range	°C	-40 to +85		

*) The Effective Isotropic Field Factor (EIFF) shows the field isolation from far field to near field standardised to an isotropic radiator. The values were determined with 3 cm spacing

**) dependant upon transmission power and tag type

***) compliant to FCC

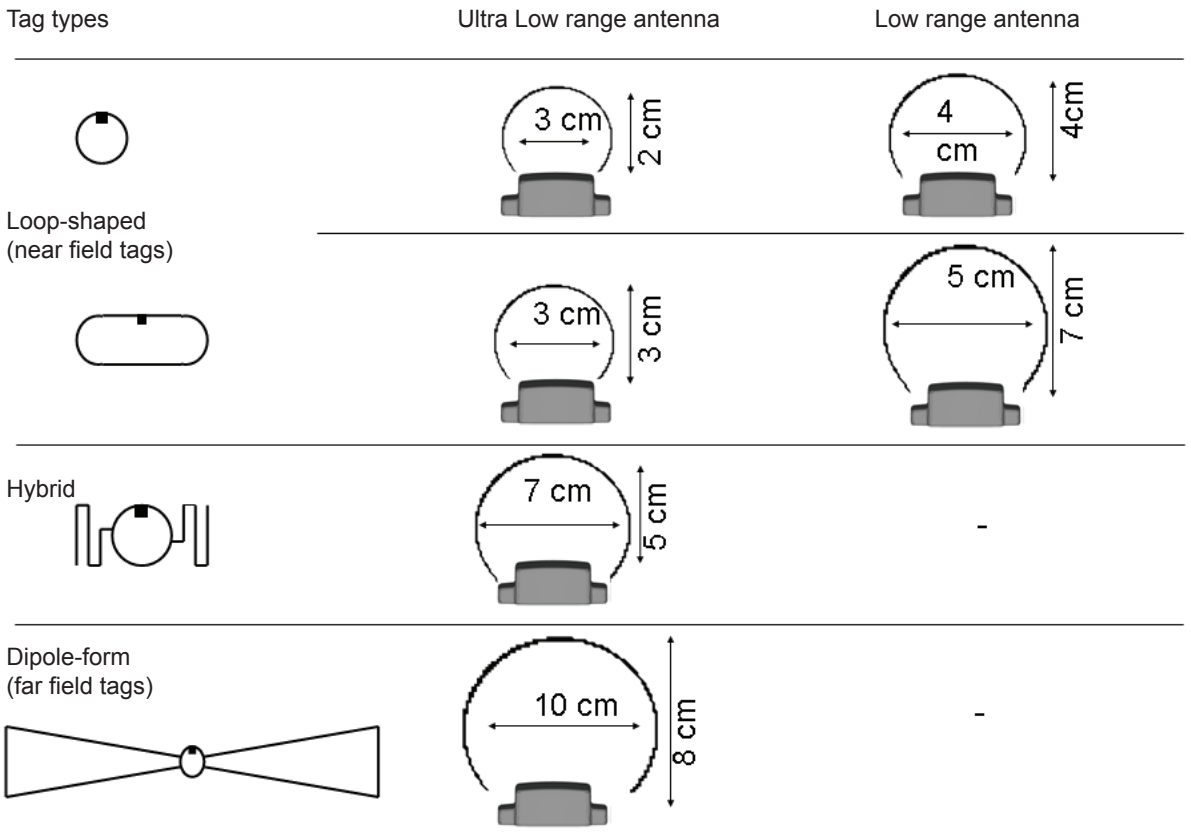

Figure 12: Read ranges of LoRa and U-LoRa by tag antenna

LoRa antennas are only suitable for loop-shaped tags.
There is no defined reading zone with hybrid tags and dipole-form tags.

4.2. Short-Mid range antenna

Type		S-MiRa (ETSI/FCC)
Order number		52010172
Frequency range	MHz	865-928
Polarization		circular
Antenna gain	dBic	-12 @ 866 MHz -10 @ 915 MHz
Axial ratio	dB	typ. 2
VSWR		< 1.4:1
Impedance	Ω	50
Front-to-back ratio	dB	> 8 (depending upon installation situation)
Max. input power (FCC15.247 / ETSI EN 302 208)	W	1.0
Far field half power beam width	°	100° half power beam width
Connection		TNC socket
Protection class	IP	67
Weight	g	320
Dimensions (W x H x D)	mm	154 x 126 x 36
Packing dimensions (approx.)	mm	230 x 160 x 81
Material	Tough, weather-resistant polymer blend; colour: RAL7045	
Installation	Four through-holes Ø 4.2 mm for M4 screws	
Operating temperature range	° C	-20 to +55
Storage temperature range	°C	-40 to +85

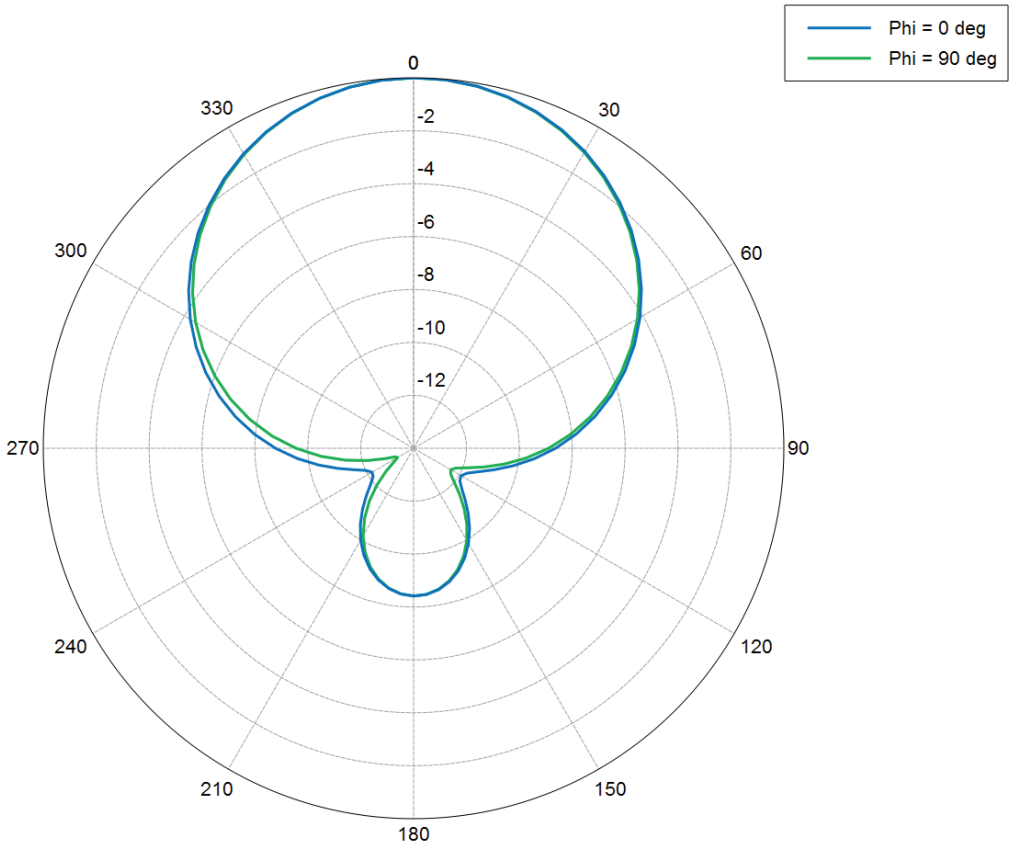

Figure 13: Antenna directivity S-MiRa

The antenna directivity shows the propagation characteristics of the EM field of the antenna.
The half power beam width and the front to your ratio can be read from it.

4.3. Mid range antennas

Type		MiRa (ETSI)	MiRa (FCC)
Order number		52010082	52010083
Frequency range	MHz	865-868	902-928 MHz
Polarization		circular	circular
Antenna gain	dBic	2.5	2.5
Axial ratio	dB	typ. 1.5	typ. 2.5
VSWR		< 1.3:1	< 1.5:1
Impedance	Ω	50	
Front-to-back ratio - circular	dB	> 10 (depending upon installation situation)	> 10 (depending upon installation situation)
Max. radiated power (ETSI EN 302 208)	W	1.0 ERP	-
Max. input power (FCC 15.247)	W	-	1.0
Far field half power beam width	°	100° half power beam width	100° half power beam width
Connection		TNC socket	
Protection class		IP 67	
Weight	g	320	
Dimensions (W x H x D)	mm	156 x 143.8 x 36	
Packing dimensions (approx.)	mm	230 x 160 x 81	
Material		Tough, weather-resistant polymer blend; colour: RAL7045	
Installation		Four through-holes Ø 4.2 mm for M4 screws	
Operating temperature range	°C	-20 to +55	
Storage temperature range	°C	-40 to +85	

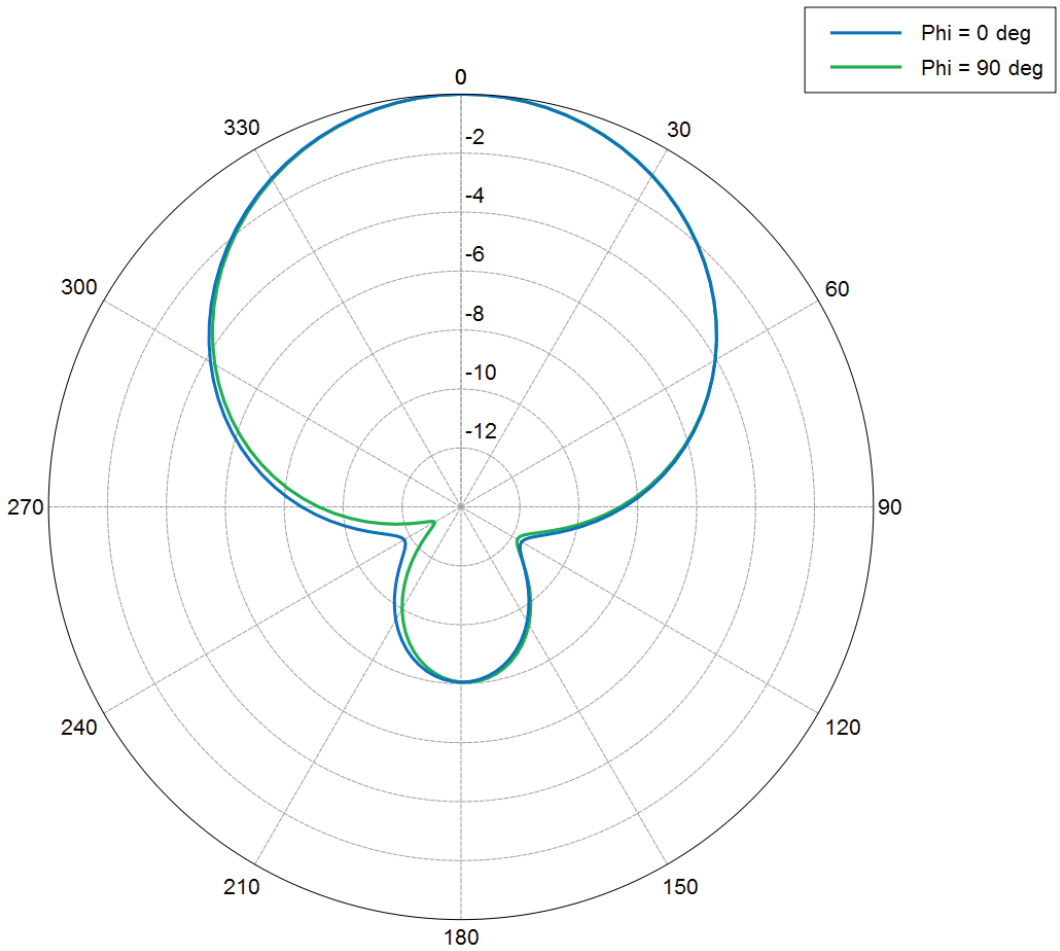

Figure 14: Antenna diagram MiRa

The antenna directivity shows the propagation characteristics of the EM field of the antenna.
The half power beam width and the front to your ratio can be read from it.

4.4. SMSH antennas

Type		SMSH-30-30-antenna modul	SMSH-HighGain-30-30-EU-antenna modul
Order number		52010219	52010260
Frequency range	MHz	865-928	865-870
Polarization		circular	circular
Antenna gain	dBic	typ. -7	typ. 5
Axial ratio	dB	typ. 1.5	typ. 2
VSWR		typ. 1.25:1	
Impedance	Ω	50	
Front-to-back ratio - circular	dB	>20	
Max. radiated power (ETSI EN 302 208)	W	+33	+33
Max. input power (FCC 15.247)	W	+30 (at Antenna port)	
Far field half power beam width	°	60/60	
Connection		input: SMA-socket output: SMA-socket	
Protection class		IP 65	
Weight	g	0.5	
Dimensions (W x H x D)	mm	310 x 300 x 8.6	
Packing dimensions (approx.)	mm	330 x 310 x 25	
Material		fiberglass-epoxy resin; copper, gold	
Installation		10 through-holes Ø 4,5 mm for M4 screws	
Operating temperature range	°C	-20 to +55	
Storage temperature range	°C	-40 to +85	

4.5. SMSH © KRAI antennas

Type		SMSH-30-30-KRAI antenna	SMSH-HighGain-30-30-KRAI-EU-antenna modul
Order number		52010258	52010259
Frequency range	MHz	865-928	865-870
Polarization		circular	circular
Antenna gain	dBic	typ. -7	typ. 5
Axial ratio	dB	typ. 1.5	typ. 2
VSWR		typ. 1.25:1	typ. 1.25:1
Impedance	Ω	50	50
Front-to-back ratio - circular	dB	>20	>20
Max. radiated power (ETSI EN 302 208)	W	+33 (ETSI EN 302 208)	+33 (ETSI EN 302 208)
Max. input power (FCC 15.247)	W	+30 (an Antennen-Buchse)	
Far field half power beam width	°	60/60	
Connection		input: SMA socket output: SMA socket	
Protection class		Indoor	
Weight	g	~0.5	
Dimensions (W x H x D)	mm	330 x 340 x 20	
Packing dimensions (approx.)	mm	345 x 350 x 35	
Material		fiberglass-epoxy resin; copper, gold	
Installation		10 through-holes Ø 4,5 mm for M4 screws	
Operating temperature range	°C	-20 to +55	
Storage temperature range	°C	-40 to +85	

Note

The antenna can be operated only in conjunction with a © KRAI Reader. When commissioning the antenna is circularl RHC polarized.

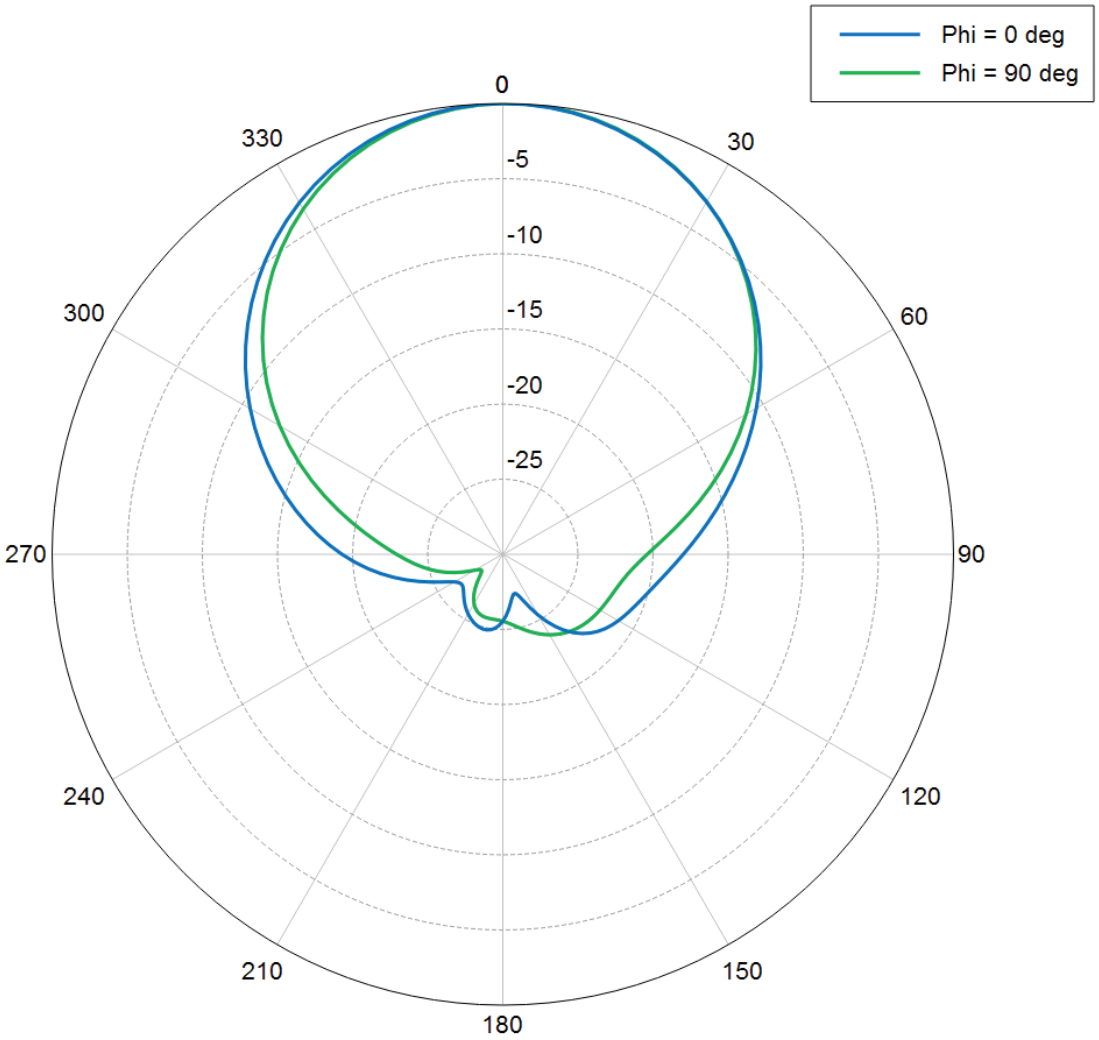

Figure 15: Antenna diagram SMSH

4.6. Wide range 70° antennas

Type		WiRa 70° (ETSI)	WiRa 70° (FCC)
Order number		52010078	52010079
Frequency range	MHz	865-868	902-928
Polarization		right-Hand circular (RHC)	
Antenna gain	dBic	8.5 @ 866 MHz	8.3 @ 915 MHz
Axial ratio	dB	typ. 1	
VSWR		< 1.2:1	
Impedance	Ω	50	
Front-to-back ratio	dB	> 18	
Max. radiated power	W	2.0 ERP (ETSI EN 302 208)	4.0 EIRP (FCC 15.247)
Far field half-power beam width	°	69°/69°	
Connection		TNC-socket	
Protection class		IP 65	
Weight	kg	~1.7	
Dimensions (W x H x D)	mm	271 x 271 x 45	
Packing dimensions (approx.)	mm	300 x 300 x 150	
Material		Tough, weather-resistant polymer blend	
Installation		Four M5 drill holes 100 x 100 mm	
Operating temperature range	°C	-20 to +55	
Storage temperature range	°C	-40 to +85	

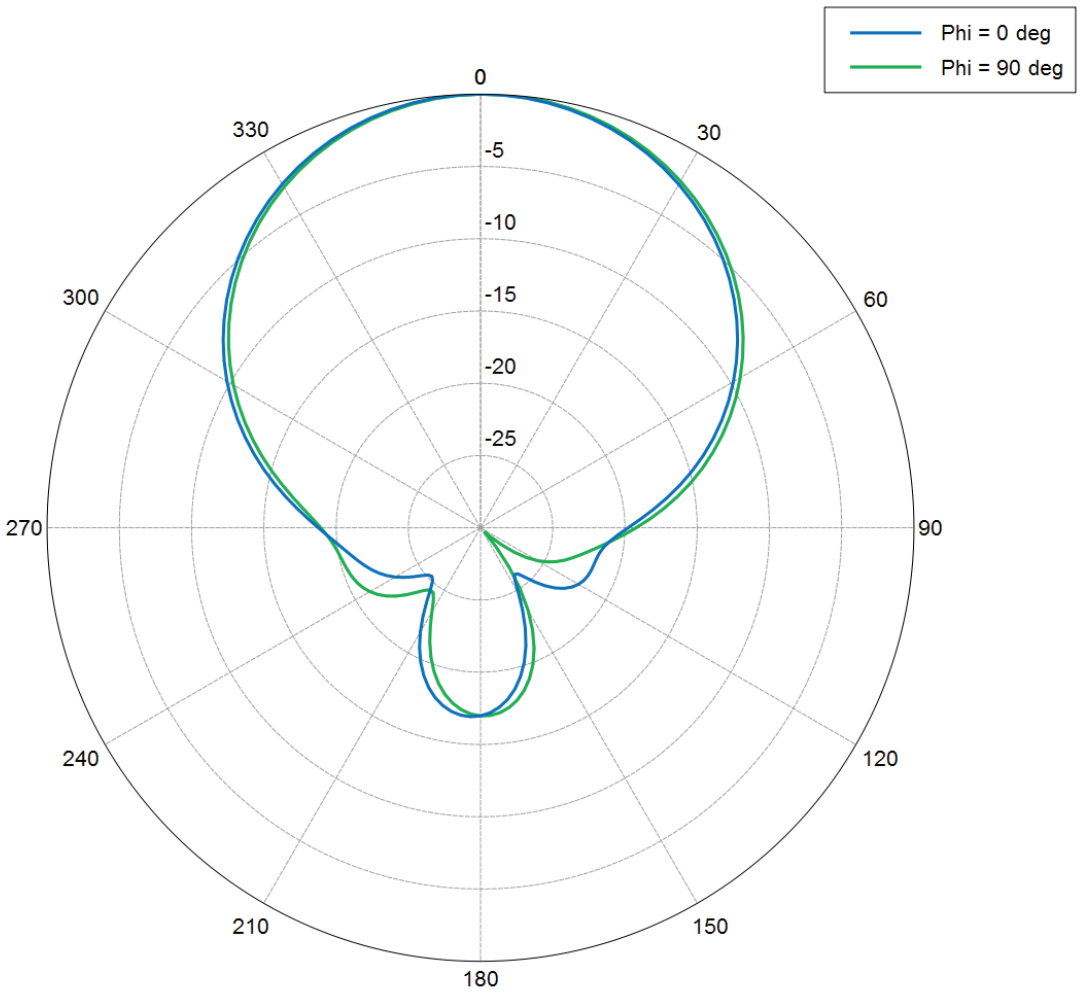

Figure 16: Antenna diagram WiRa 70° ETSI/FCC

The antenna points to the propagation characteristics of the EM field of the antenna.
It would therefore appear the opening angle and the front-back ratio.

4.7. Wide range © KRAI 70° antennas

Type		WiRa-70°-KRAI (ETSI)	WiRa-70°-KRAI (FCC)
Order number		52010193	52010194
Frequency range	MHz	865-868	902-928
Polarization circular		LHCP / RHPC *	
- Antenna gain	dBiC	typ. 6,5	
- Axial ratio	dB	typ. 2	
Polarization linear		Horizintal / Vertical	
- gain	dBic	typ. 7.5	
- VSWR		< 1.2:1	
Impedance	Ω	50	
Front-to-back ratio	dB	> 18	
Max. radiated power		2.0 ERP (ETSI EN 302 208)	4.0 EIRP (FCC 15.247)
Far field half-power beam width	°	69°/69°	
Connection		TNC-socket	
Protection class		IP 65	
Weight	kg	~1.7	
Dimensions (W x H x D)	mm	271 x 271 x 45	
Packing dimensions (approx.)	mm	300 x 300 x 150	
Material			
Antenna cover		Tough, weather-resistant polymer blend Colour: RAL7045	
Chassis		Aluminium	
Seals		Thermoplastic elastomer	
Installation		Four M5 drill holes 100 x 100 mm	
Operating temperature range	°C	-20 to +55	
Storage temperature range	°C	-40 to +55	

* (Circular LHCP / Circular RHCP / Linear horizontal / Linear vertical)

Note

The antenna can be operated only in conjunction with a © KRAI Reader. When commissioning the antenna is circularl RHC polarized.

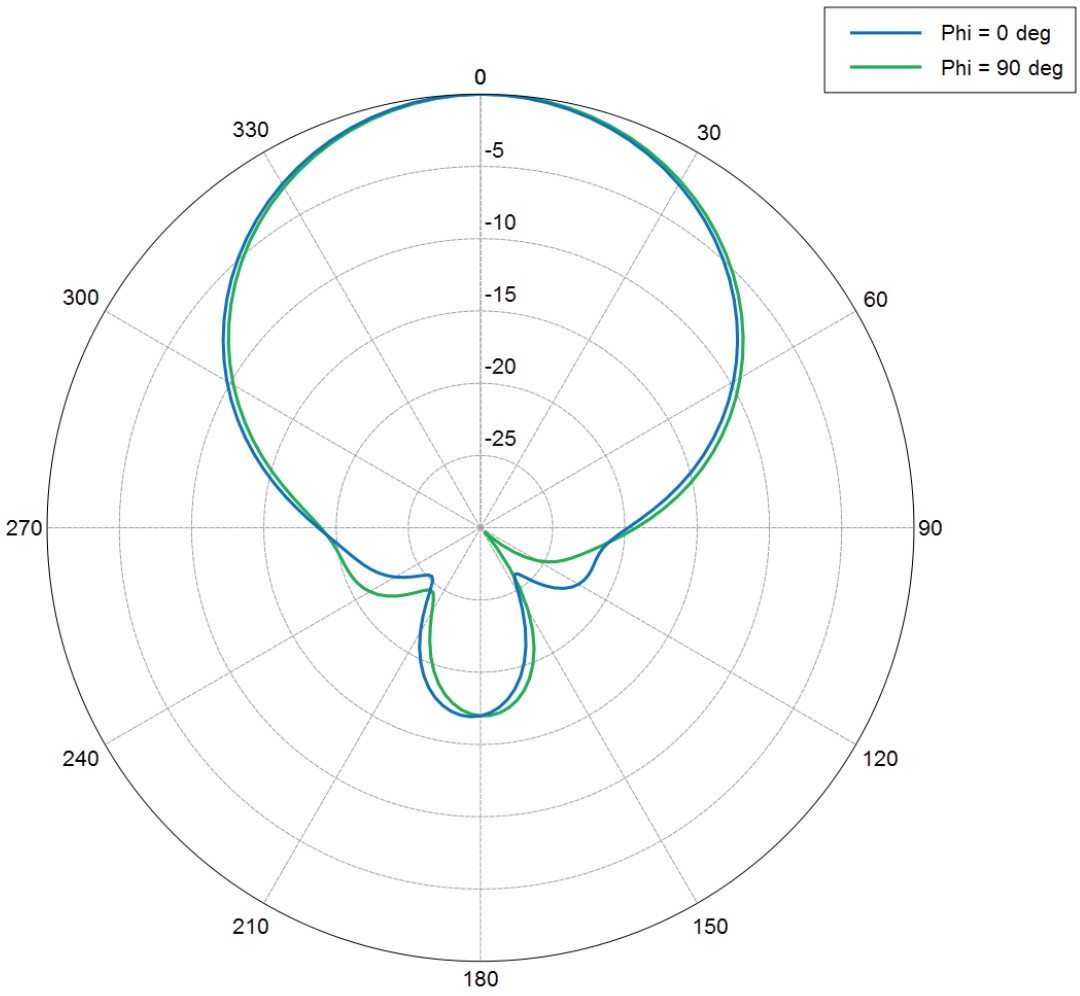

Figure 17: Antenna diagram WiRa-70°-KRAI ETSI/FCC

4.7. Wide Range 40° Antenne

Type		WiRa 40° linear (ETSI)	WiRa 40° linear (FCC)
Order number		52010251	52010252
Frequency range	MHz	865-870	902-928
Polarization		linear	
Antenna gain	dBic	typ. 12	typ. 13
VSWR		< 1.3:1	< 1.5:1
Impedance	Ω	50	
Front-to-back ratio	dB	>18	>25
Max. radiated power	W	+33 ERP (ETSI EN 302 208)	+36 EIRP (FCC 15.247)
max. input power	W		+30 (at antenna port)
Far field half-power beam width	°	42/42	40/40
Connection		N female	
Protection class		IP 65	
Weight	kg	~ 3	
Dimensions (W x H x D)	mm	456 x 456 x 25 (45.5)	
Packing dimensions (approx.)	mm	470 x 495 x 65	
Material			
Antenna cover		Thermoplastic radome, UV resistance, gray	
Chassis		Stainless steel	
Installation		The mounting kit (Order-No. 52010005) is available as accessory	
Operating temperature range	°C	-20 to +55	
Storage temperature range	°C	-40 to +85	

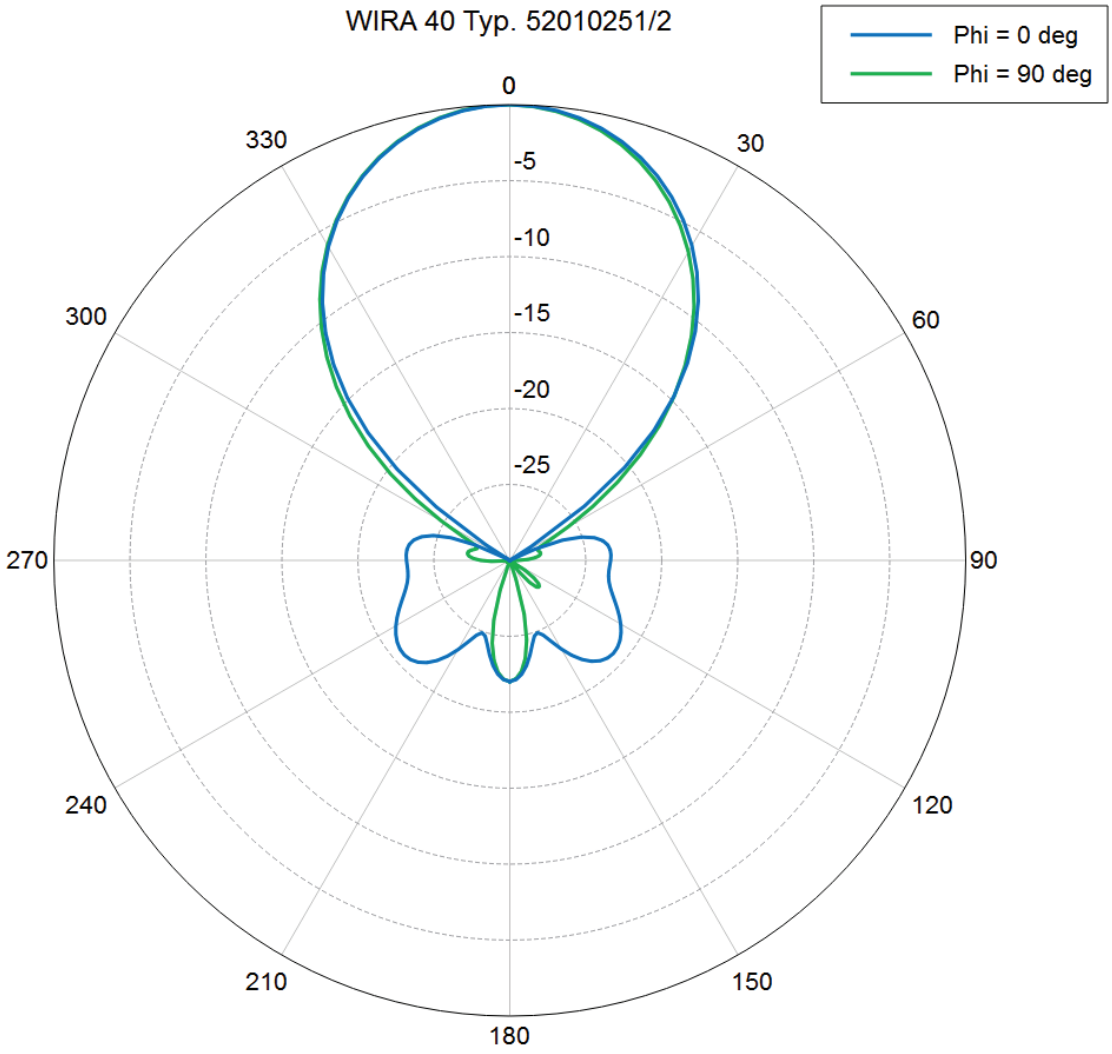

Figure 18: Antenna diagram WiRa-40-linear ETSI/FCC

4.7. Wide Range 30° linear Antenne

Type		WiRa 30° linear (ETSI)	WiRa 30° linear (FCC)
Order number		52010248	52010249
Frequency range	MHz	860-870	902-928
Polarisation		linear	
Antenna gain	dBic	typ. 11	typ. 11.5
Impedance	Ω	50	
VSWR		< 1.3:1	< 1.5:1
Front-to-back ratio	dB	> 18	> 20
Max. radiated power (ETSI EN 302 208)	W	+33 ERP (ETSI EN 302 208)	+30 (at antenna port) (FCC 15.247)
Far field half-power beam width	°	30 vertical 70 horizontal	
Connection		N female	
Protection class		IP 65	
Weight	kg	3.7	
Dimensions (W x H x D)	mm	557 x 262 x 59	
Packing dimensions (approx.)	mm	762 x 356 x 203	
Material			
Antenna cover		Fibreglass radome, UV resistance, gray	
Chassis		Stainless steel	
Patch plate		Brass tin-plated	
Antenna support		Aluminum	
Seals		Thermoplastic elastomer	
Installation		The mounting kit (Order-No. 52010005) is available as accessory	
Operating temperature range	°C	-20 to +55	
Storage temperature range	°C	-40 to +85	

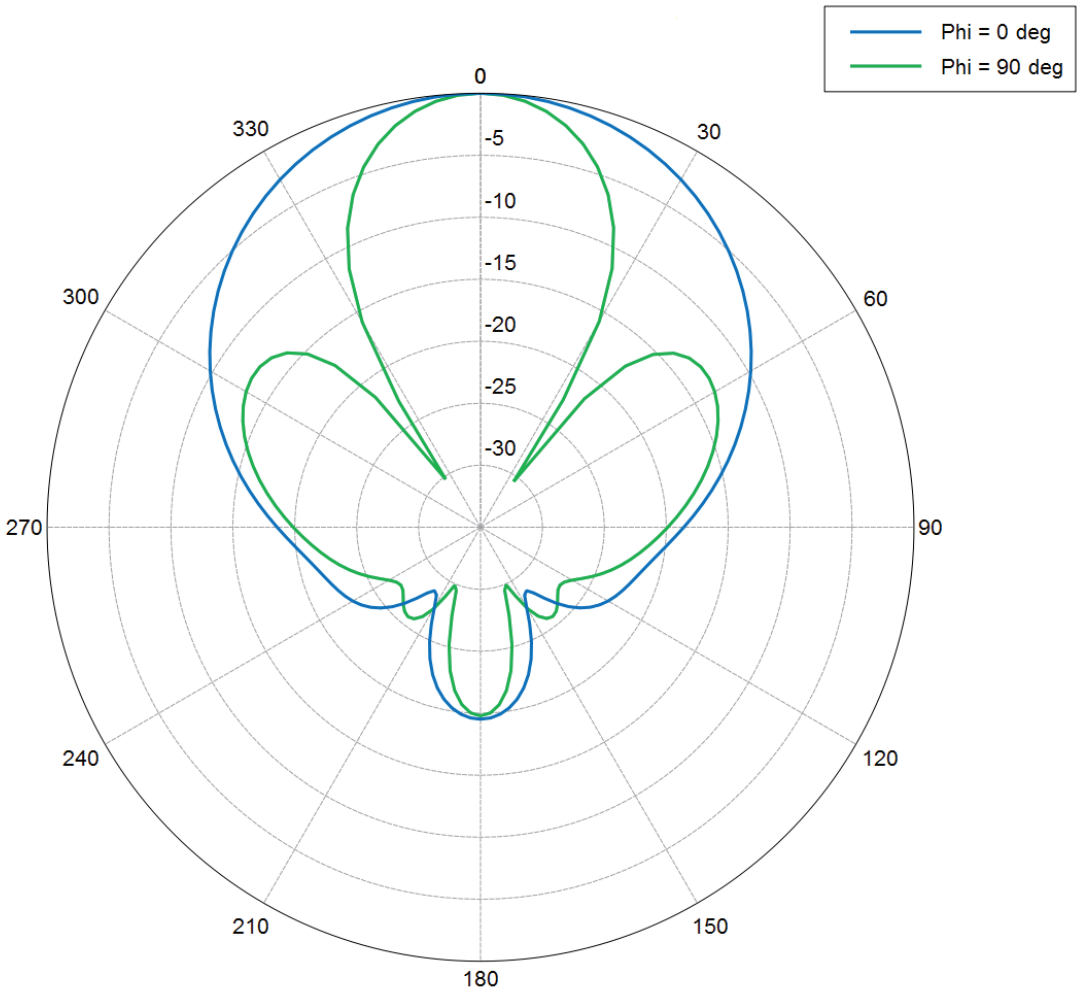

Figure 19: antenna diagram WiRa-40-linear ETSI/FCC

4.9. Wide Range 30° antennas

Type		WiRa 30° (ETSI)	WiRa 30° (FCC)
Order number		52010086	52010087
Frequency range	MHz	865-868	902-928
Antenna gain	dBic	typ. 11	typ. 10,5
Impedance	Ω	50	
VSWR		< 1,2:1	
Axial ratio	dB	< 2	
Polarization		right-handed circular (RHC)	
Front-to-back ratio	dB	> 20	
Max. radiated power (ETSI EN 302 208)	W	2,0 ERP (ETSI EN 302 208)	-
Max. radiated power (FCC 15.247)	W	-	1 W (30 dBm) conducted
Far field half-power beam width	°	30°/69°	
Connection		N socket	
Protection class		IP 65	
Weight	kg	~3,7	
Dimensions (W x H x D)	mm	557 x 262 x 59	
Packing dimensions (approx.)	mm	762 x 356 x 203	
Material		Polymer Blend, Aluminium	
Antenna cover		Fibreglass radome, UV resistance, gray	
Chassis		Thermoplastic elastomer	
Patch plate		Brass tin-plated	
Antenna support		Aluminum	
Seals		Thermoplastic elastomer	
Installation		The mounting kit 52010005 is available	
Operating temperature range	°C	-20 to +55	
Storage temperature range	°C	-40 to +85	

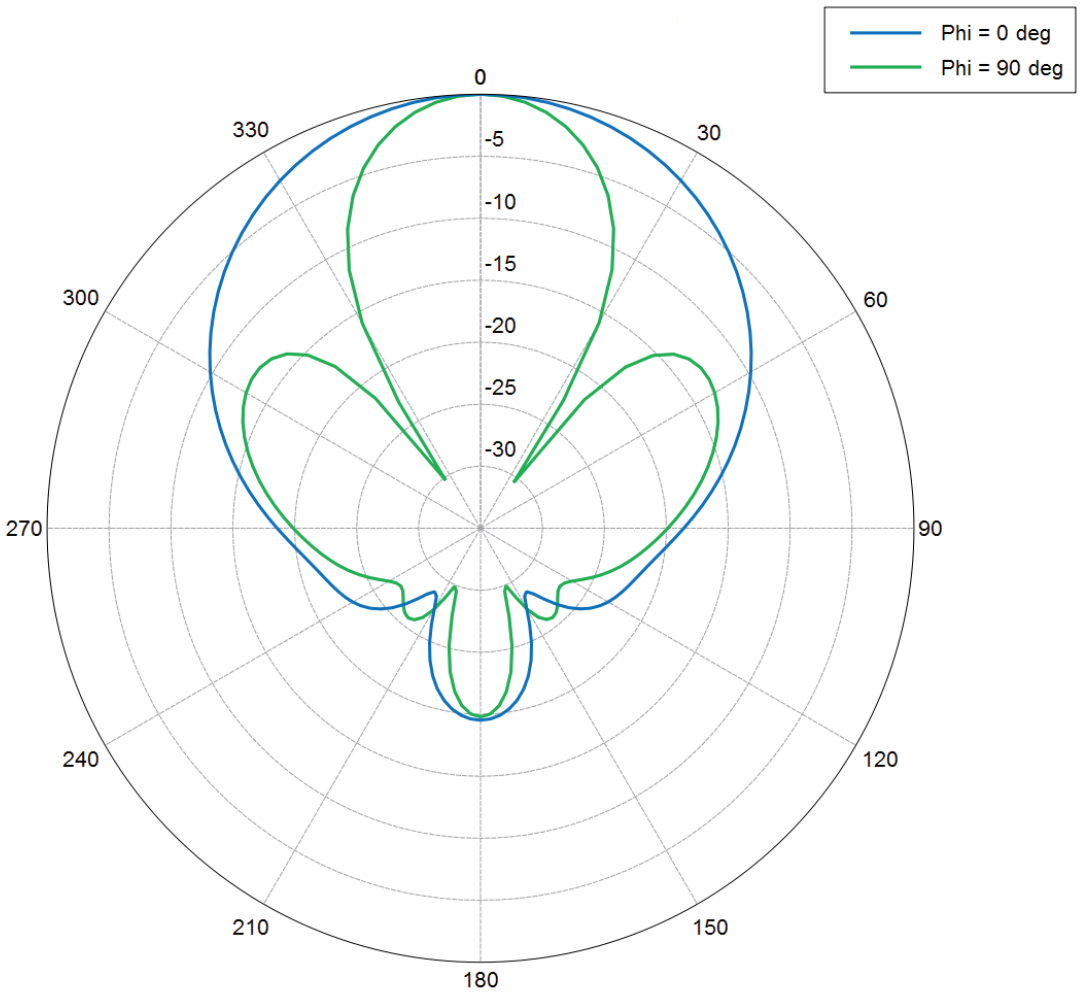

Figure 20: Antenna diagram WiRa 30° ETSI/FCC

The antenna points to the propagation characteristics of the EM field of the antenna.
It would therefore appear the opening angle and the front-back ratio.

4.10. Wide Range © KRAI CSB 30° antennas

Type		WiRa-30-CSB-KRAI (ETSI)
Order number		52010227
Frequency range	MHz	865-870
Polarization		circular
Antenna gain	dBic	6
Impedance	Ω	50
VSWR		<1.3:1
Axial ratio	dB	typ. 2
Front-to-back ratio	dB	>17
Max. radiated power (ETSI EN 302 208)	W	2 ERP
Max. radiated power (FCC 15.247)	W	+30
Far field half-power beam width	°	35 vertical 80 horizontal
Connection		N socket
Protection class		IP 65
Weight	kg	~ 3,7
Dimensions (W x H x D)	mm	557 x 262 x 59
Packing dimensions (approx.)	mm	762 x 356 x 203
Material		
Antenna cover		Fibreglass radome, UV resistance, gray
Chassis		Stainless steel
Patch plate		Brass tin-plated
Antenna support		Aluminum
Seals		Thermoplastic elastomer
Installation		The mounting kit is available
Operating temperature range	°C	-20 to +55
Storage temperature range	°C	-40 to +85

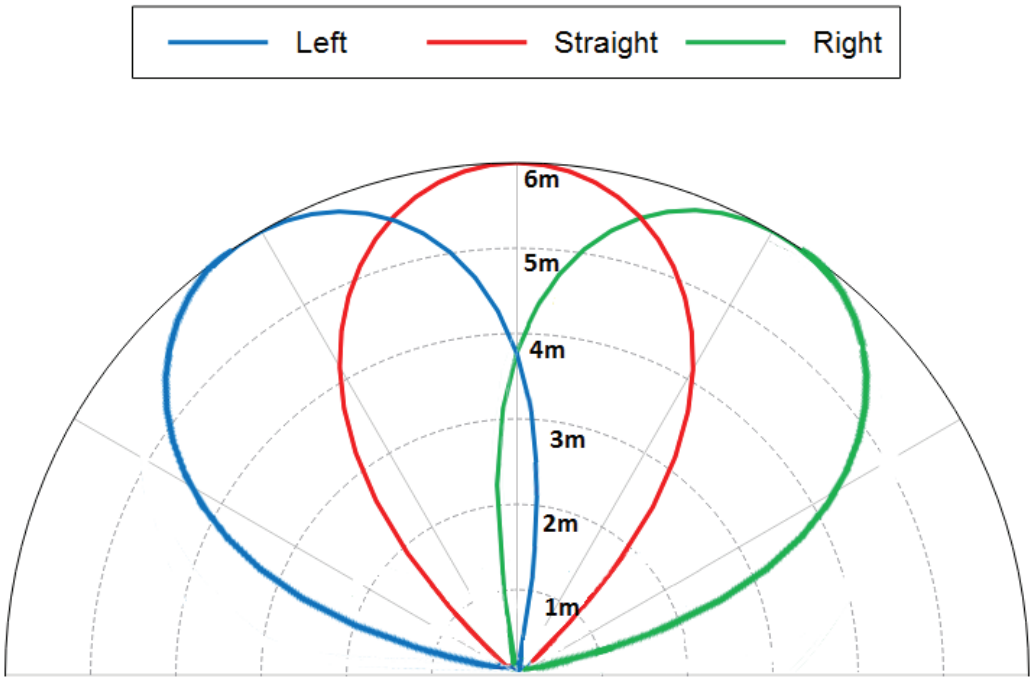

Figure 21: Read range vertical cut WiRa-30-KRAI- ETSI antenna

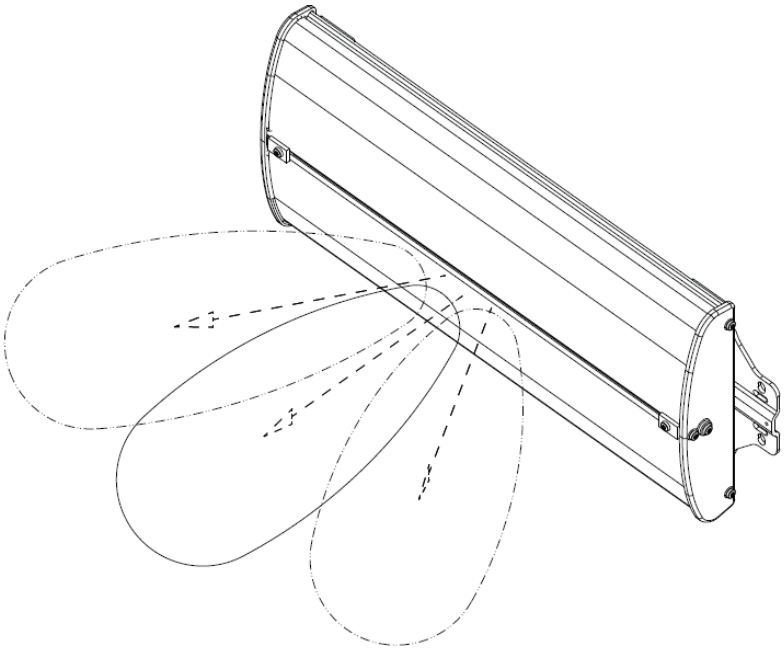

Figure 22: Directions of the WiRa-30-CSB-KRAI-ETSI antenna

Hinweis

Please note that the Beam „R“ is assigned (right) getting the connection side.

The MiRa and WiRa antennas are relatively insensitive to the type of attachment and the materials surrounding the antennas. Nevertheless few conductive objects in the vicinity of the antenna should be presented. In addition, other objects, such as containers with liquids in the vicinity of the antenna affect their functionality. In such cases, a reassessment of the antenna in the particular installation conditions is necessary. The LoRa antennas are very robust and suitable for installation in metallic environment.

5.1. Connecting kit for antennas and readers

Order number	Type reader	Order number Connecting Kit	Type Conneting Kit
52010093	RRU4-RS4-E6	52010125	CK-RRU RS4
52010096	RRU4-RS4-U6		
52010099	ARU4-RS4-E6		
52010102	ARU4-RS4-U6		
52010094	RRU4-ETG-E6	52010126	CK-RRU ETG
52010095	RRU4-ETL-E6		
52010097	RRU4-ETG-U6		
52010098	RRU4-ETL-U6		
52010100	ARU4-ETG-E6		
52010101	ARU4-ETL-E6		
52010103	ARU4-ETG-U6		
52010104	ARU4-ETL-U6		
52010225	ARU4-ELK-E6		
52010226	ARU4-ELK-U6		
52010135	M-ARU RS232	52010189	CK-M-ARU RS
52010136	M-ARU RS232 FCC		
52010180	M-ARU-ELC-E6	52010209	CK-M-ARU PoE
52010181	M-ARU-ELC-U6		
52010198	M-ARU-ETH-E4		
52010199	M-ARU-ETH-U4		
52010190	ERU4-ETG-E4	kein	kein
52010191	ERU4-ETG-U4	kein	kein
52010200	RDR-ETH-E4	kein	kein

5.2. Cable laying

- The cable should be laid vertical (see Figure 13) away from the antenna and should be laid direct. The cable length is to be selected as short as possible to minimise cable losses.
- Cable loops around the antenna, as shown in Figure 12, or laying the cable in front of the antenna are to be avoided.

Figure 23: Do not lay cable in front of the antenna

Figure 24: Do not lay cable around the antenna!

5.3. Wall/mast clamp

Note

Selecting the installation location:

Before drilling the holes, make sure there are no electrial cables in the wall.

Risk if fatal injury due to electric shock !

Make sure that the wall / the mast has a sufficient capacity. Use the appropriate mounting hardware (not included).
You may need to strengthen the wall of your desired mounting location or use a different masts.

5.3.1. Wall/mast clamp for RRU4/ARU4 Reader und RFID antennas

Wall/mast clamp for install RFID antennas and RRU4/ARU4 readers (up to 6.0 kg total weight).
Mounting plate with variours pre-drilled holes suitable for Wide range antennas ect.

Order number:		52010128
Max. load-bearing capacity	kg	6,0
Adjustment range	°	± 30 ± 30
Weight (unpacked)	kg	ca. 0,9
Dimensions of the clamp	mm	200 x 200 x 125
Dimension of the packing	mm	265 x 235 x 105
Material	Clamp: galvanised sheet stell Screw/hose clip: stainless steel	
Items supplied	Wall plate, mounting plate, mast clamp, hose clip, 8 screws M5x10, 8 shims, 4 screws M6*10	

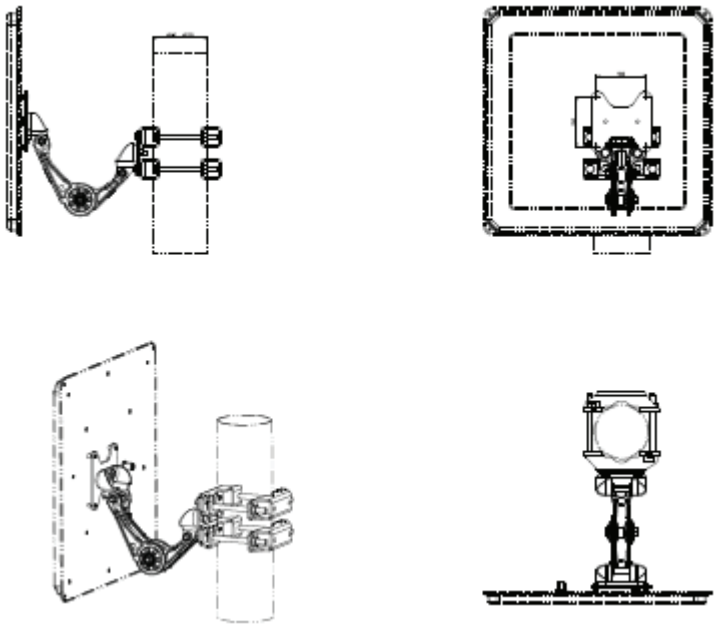

Figures 25: Wand-/Mastmontage 52010262

Figures 26: Wand-/Mastmontage 52010128

5.3.2. Mast clamp for Wide range 30° antennas

Mast clamp for install Wide range 30° antennas to 2 - 4.5 inch (50 - 115 mm) mounting structures. Mounting plate with variours pre-drilled holes suitable for Wide range antennas ect.

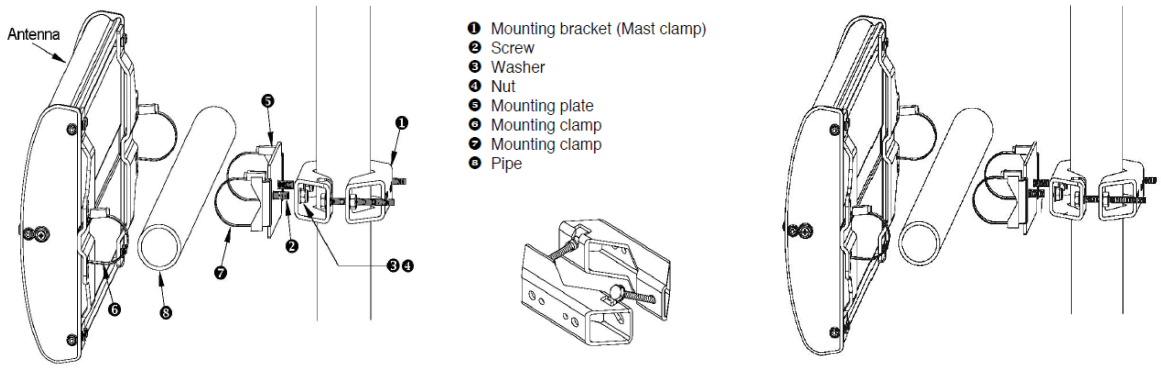

Figures 27: Wand-/Mastmontage 52010005

Order number:		52010005
Max. load-bearing capacity	kg	
Adjustment range	°	± 90
Weight (unpacked)	kg	1.5
Dimension of the packing	mm	200 x 150 x 75
Material	Stainless steel and galvanized steel; fasteners are stainless steel	
Items supplied	mounting bracket, 2x Sechsantkopfschrauben M8x20, 2x Unterlegscheiben 8mm, 2x Senkkantmutter M8, mounting plate, 2-Clamp Kit	

5.3.3. Mast mounting Ste for Wide Range 70° antennas and for RRU4/ARU4-Reader

Figures 28: Wand-/Mastmontage 52010261

Order number:		52010261
Max. load-bearing capacity	kg	6,0
Adjustment range	°	± 30 Azimuth ± 45 Elevation
Weight (unpacked)	kg	ca. 0,6
Dimension of the packing	mm	150 x 120 x 80
Material	Stainless steel and galvanized steel; fasteners are stainless steel	
Items supplied	mounting bracket, 2x Sechsantkopfschrauben M8x20, 2x Unterlegscheiben 8mm, 2x Senkkantmutter M8, mounting plate, 2-Clamp Kit	

5.4. Assignment Wall/mast clamp to antennas and readers

		Order No. Wall/Poll monting set			
Order-No, antenna	Typ antenna	52010005	52010128	52010261	52010262
52010086	WiRa 30° ETSI	X			
52010087	WiRa 30° FCC	X			
52010251	WiRa 40 linear ETSI				X
52010252	WiRa 40 linear FCC				X
52010078	WiRa 70° ETSI		X	X	X
52010079	WiRa 70° FCC		X	X	X
52010082	MiRa ETSI		X		
52010083	MiRa FCC		X		
52010172	S-MiRa ETSI/FCC		X		
52010193	WiRa-70-KRAI-ETSI		X	X	X
52010194	WiRa-70-KRAI FCC		X	X	X
52010227	WiRa-30-CSB-KRAI ETSI	X			
52010228	WiRa-30-CSB-KRAI FCC	X			
52010248	WiRa 30 linear ETIS	X			
52010249	WiRa 30 linear FCC	X			
		Order No. Wall/Poll monting set			
Order-No. Reader	Typ-Reader	52010005	52010128	52010261	52010262
52010094	RRU4-ETG-E6		X	X	
52010095	RRU4-ETL-E6		X	X	
52010097	RRU4-ETG-U6		X	X	
52010099	ARU4-RS4-E6		X	X	
52010100	ARU4-ETG-E6		X	X	
52010101	ARU4-ETL-E6		X	X	
52010102	ARU4-RS4-U6		X	X	
52010103	ARU4-ETG-U6		X	X	
52010104	ARU4-ETL-U6		X	X	
52010180	RRU4-ELC-E6		X	X	
52010181	RRU4-ELC-U6		X	X	
52010225	ARU-ELK-E6		X	X	
52010226	ARU-ELK-U6		X	X	

5.5. Installation drawings

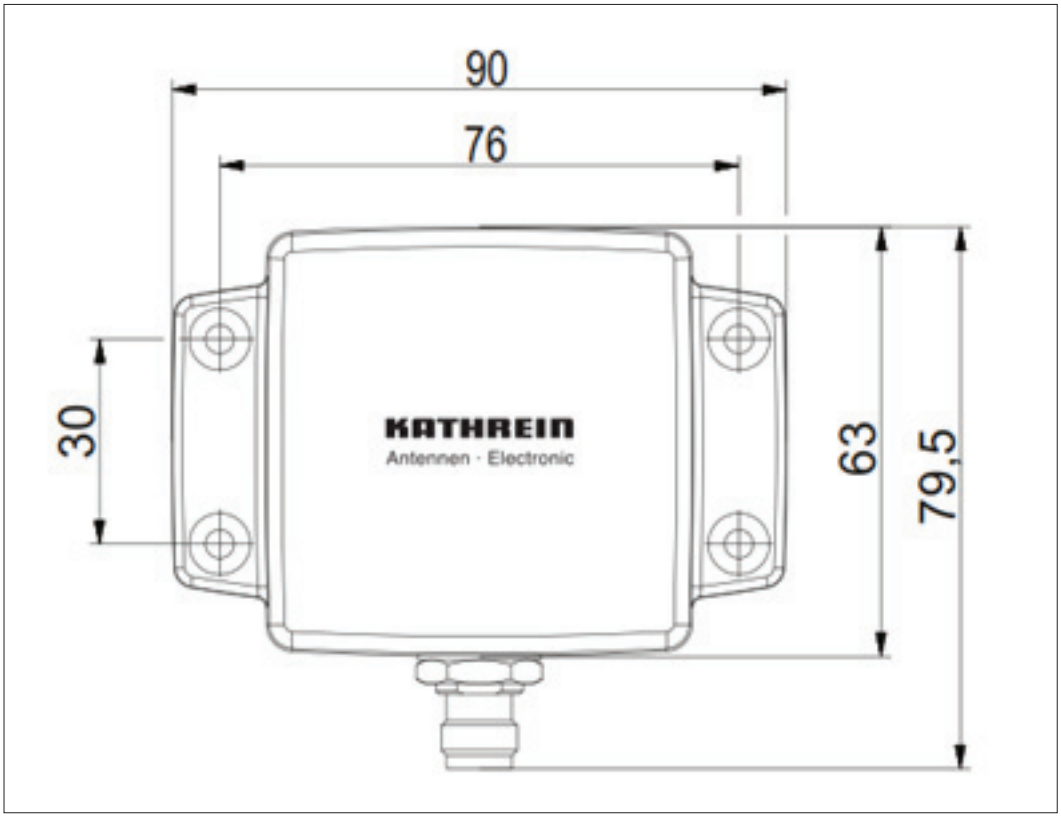

Figure 29: Dimensios for U-LoRa/LoRa antenna (52010092, -84, -85)

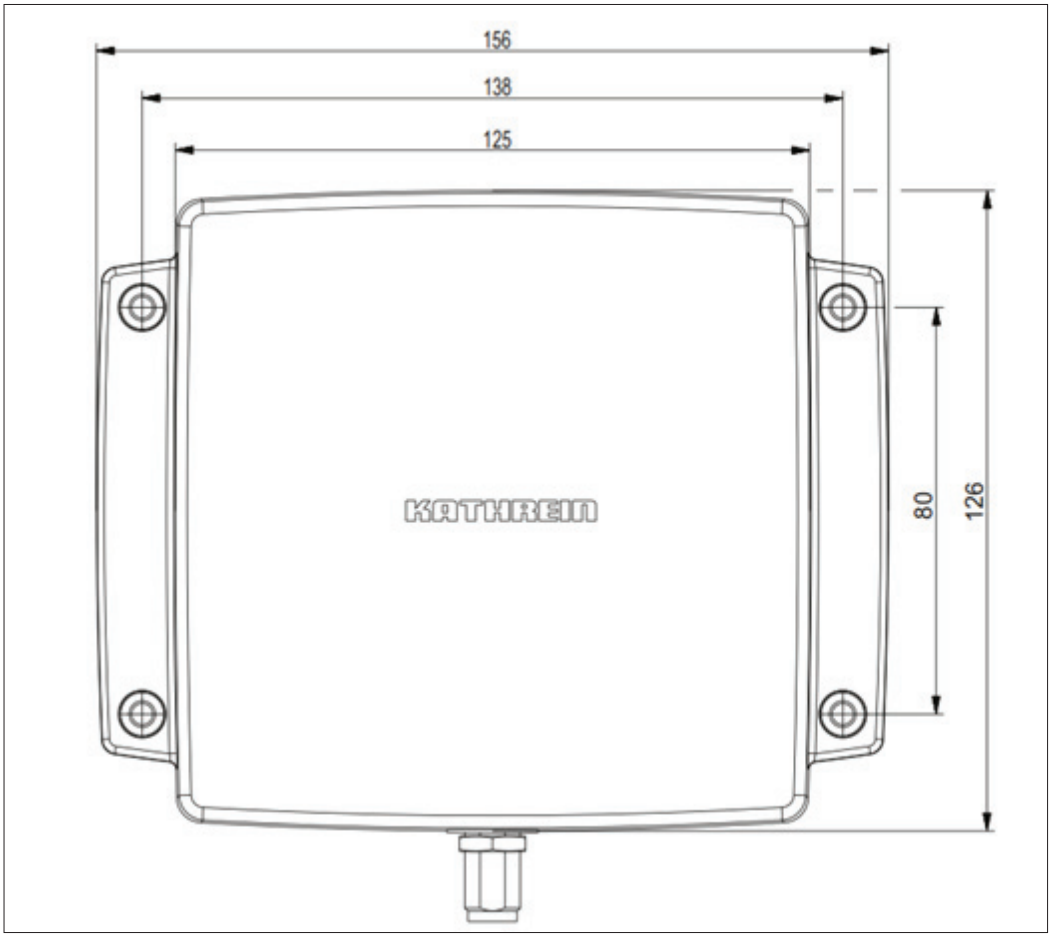

Figure 30: dimensios for MiRa/S-Mira antenna (52010172, -82, -83)

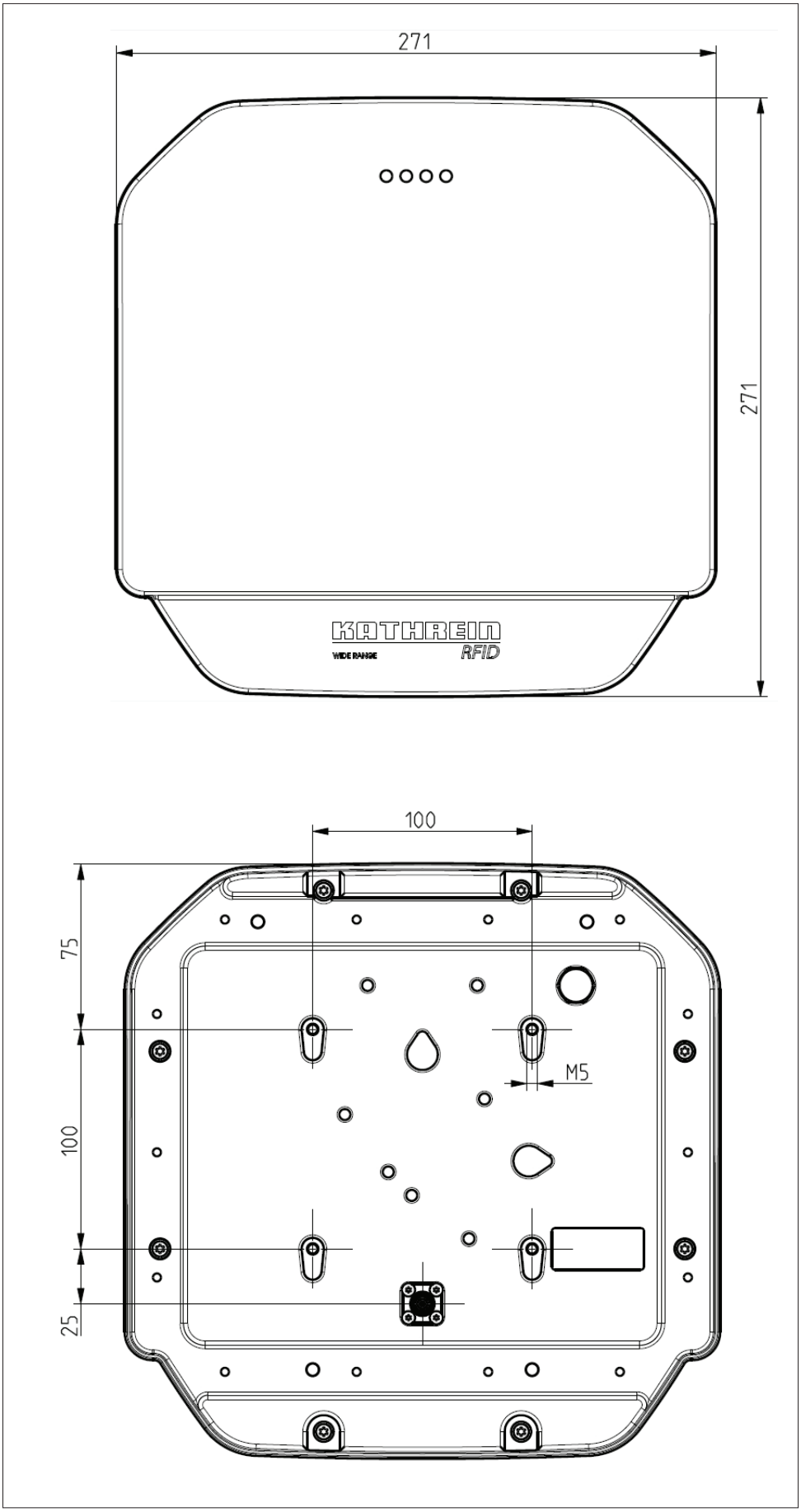

Figure 31: Dimensions for WiRa 70° antenna (52010078, -79)

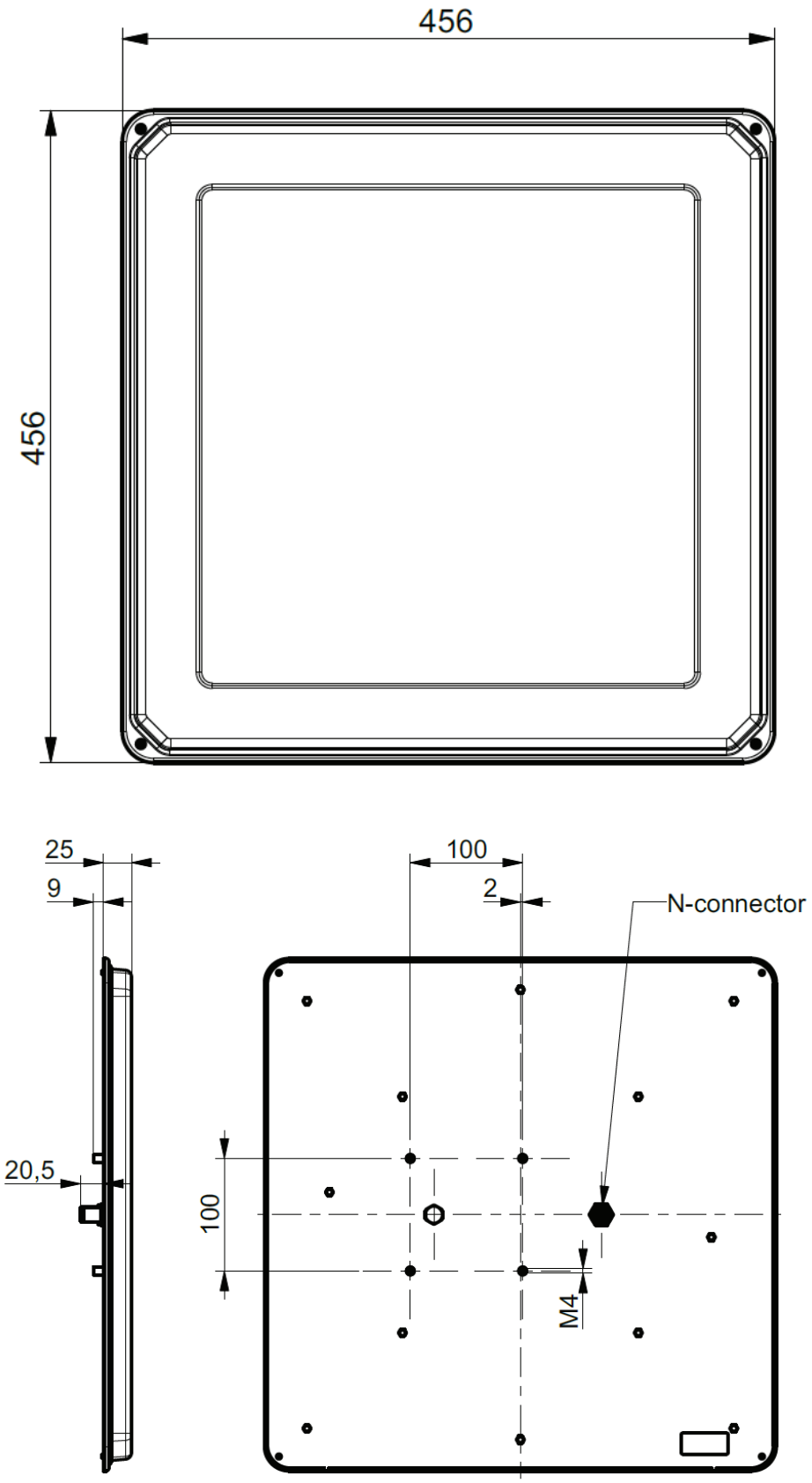

Bild 32: Abmessungen für WiRa 40° (52010251, -252)

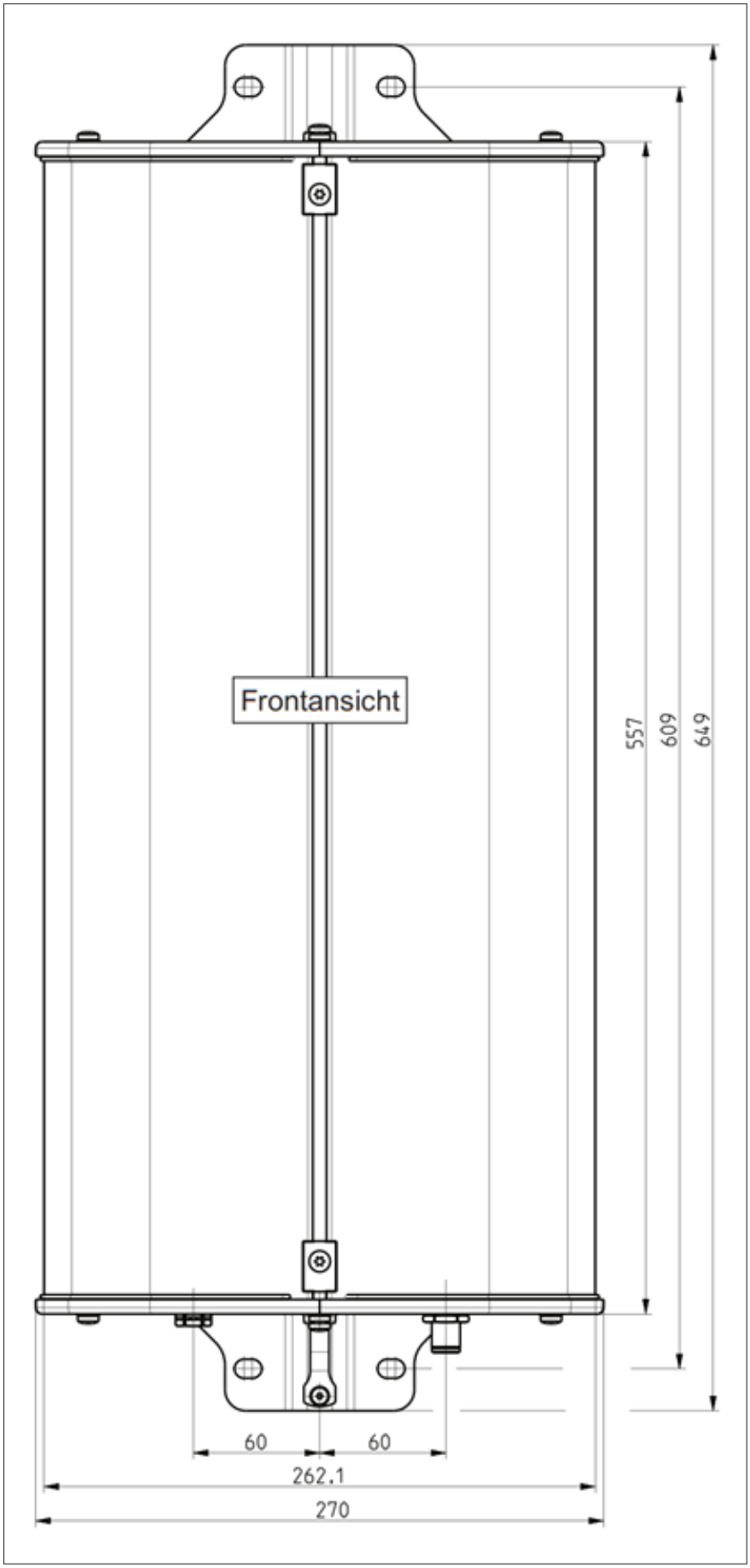

Figure 33: Dimensions for WiRa 30° antenna (52010086, -87

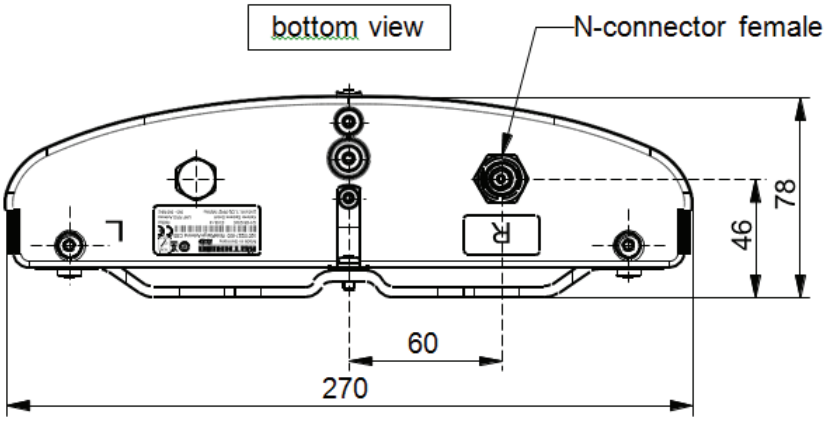

Figure 34: Note left / right installation WiRa-30-CSB-KRAI antenna (52010227, -228)

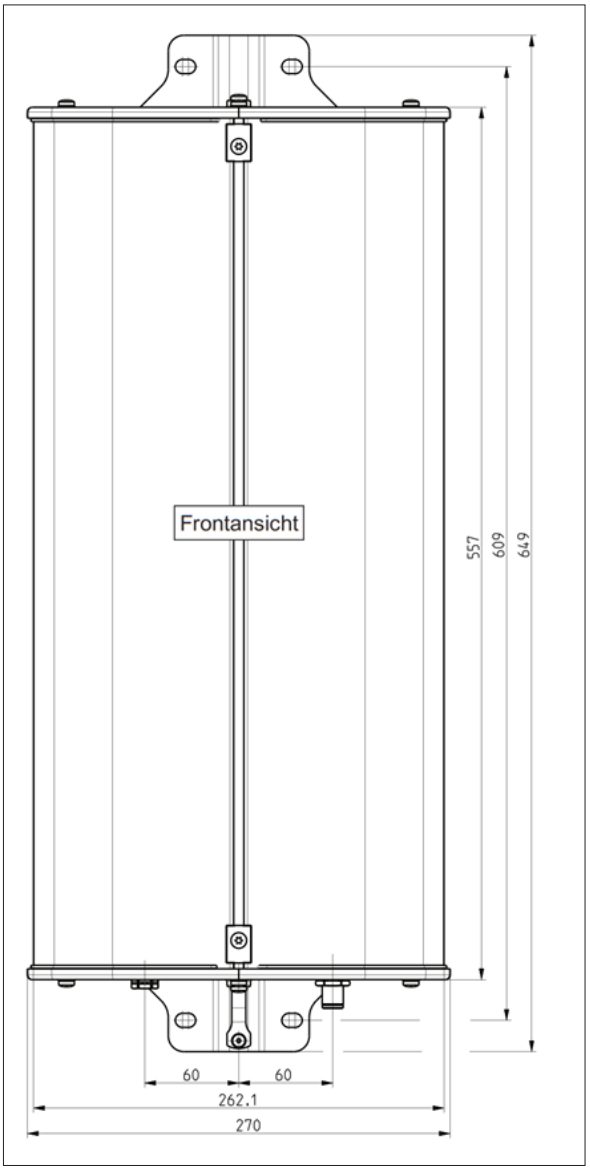

Figure 35: Dimensions for WiRa-30-CSB-KRAI antenna (52010227, -228)

Note

Please note that the Beam „R“ is assigned (right) getting the connection side.

8. Contact address

Address	Contact
Kathrein RFID	E-Mail: rfid-sales@kathrein-rfid.de
Kronstaudener Weg 1	Internet: www.kathrein-rfid.de
D-83071 Stephanskirchen	