Installation manual for Kathrein RFID UHF-Reader

RRU4
ARU4
M-ARU
ERU
RDR

This document is valid for all Kathrein RFID readers and describes the construction and commissioning of the readers.

Version 1.03
date of creation: 01.06.2012
document no.: 936B057

KATHREIN RFID

RFID-UHF-Reader

This manual applies to the followings RRU4 types:

Type:	Order number:
RRU4-RS4-E6	52010093
RRU4-ETG-E6	52010094
RRU4-ETL-E6	52010095
RRU4-RS4-U6	52010096
RRU4-ETG-U6	52010097
RRU4-ELC-E6 © KRAI	52010180
RRU4-ELC-U6 © KRAI	52010181

This manual applies to the followings ARU4 types:

Type:	Order number:
ARU4-RS4-E6	52010099
ARU4-ETG-E6	52010100
ARU4-ETL-E6	52010101
ARU4-RS4-U6	52010102
ARU4-ETG-U6	52010103
ARU4-ETL-U6	52010104
ARU4-ELK-E6	52010225
ARU4-ELK-U6	52010226
ARU4-ELC-U6	52010171

This manual applies to the followings M-ARU types:

Type:	Order number:
M-ARU-RS232 ETSI	52010135
M-ARU-RS232 FCC	52010136
M-ARU-ETH-E6	52010198
M-ARU-ETH-U6	52010199

This manual applies to the followings ERU types:

Type:	Order number:
ERU-ETG-E4	52010190
ERU4-ETG-U4	52010191

This manual applies to the followings RDR types:

Type:	Order number:
RDR-ETH-E4	52010200
RDR-ETH-U4	52010201

The information in this manual was correct at the time of editorial deadline.
We reserve the right however to make changes at any time and without prior notice.

This document was prepared for specialist personal who install, configure and place in operation the reader.

Copyright notice

The reproduction or distribution of this document or extracts from it in whatever form and by whatever means (electronic or mechanical) for whatever purpose is permitted only with the prior written permission of Kathrein.

Kathrein accepts no liability for omissions or inaccuracies in this document or in relation to the provision or use of the information contained in this document. Kathrein reserves the right to change the products described in this document and does not accept any liability in relation to the application or usage of the products described in this manual.

This document and the information contained in it are proprietary information of Kathrein and should be treated as confidential. Kathrein provides this document to its customers in connection with contacts of sale for the products described therein. If the person in possession of this document, being a legal or natural person, is not a contractual sales partner of Kathrein, or Kathrein has not intended him by other means as the recipient of the document and the information contained therein, the person in possession is hereby informed that the use of this document is unlawful and a violation of the rights of Kathrein.

Scope

The information contained in this manual is intended for the support of the development process and as development guidance for the customer. In addition this manual offers supporting information about the standards to be applied at the place of installation and the relevant safety standards for installation and configuration of the Kathrein reader.

General information

This manual contains information on the installation, configuration, operation and maintenance of the reader. In addition it gives detailed technical data in order better to familiarise the user with the features of the reader.
In order to ensure a long working life and fault-free operation, this manual should therefore be read carefully and all the instructions and information contained in it should be complied with.

Further reading on this manual is as ((A)) in section 2.2. further reading or 7th list of references listed.

Warranty

Switching on the AC or DC power supply prior to connecting the LAN cable is considered incorrect installation. Any functional defect arising as a result is excluded from the warranty/guarantee. Before installing or servicing the reader, the person concerned must have read the manual and understood its contents. Kathrein accepts no liability if the customer fails to implement the precautions listed here. In such cases, any claims under the warranty/guarantee are void.

Disposal instruction

Electronic equipment is not classed as household waste and must be disposed of properly in accordance with Directive 2002/96/EC OF THE EUROPEAN PARLIAMENT AND OF THE COUNCIL of 27 January 2003 on used electrical and electronic equipment.
At the end of its service life, take this device for disposal at a designated public collection point.

Used batteries are special waste!
Do not put used batteries into your domestic waste; instead take them to a collection point for used batteries!

Foreword and general information 3

List of Contents 4

1. Safety instructions/information 6

2. Introduction 9

2.1. The reader 9

2.2. RFID system 9

2.3. Kathrein RFID Antenna Interface (© KRAI) 11

2.4. Wide Range © KRAI antenna 12

2.5. SMSH © KRAI planar antenna module 12

2.6. Further reference material 13

2.7. Scope of supply 13

2.8. Accessories 14

3. Installation 15

3.1. Selecting the installation site 15

3.2. Installing the reader RRU / ARU 15

3.3. Installing the reader ERU 16

3.4. Installing the reader RDR 17

3.5. Installing the reader M-ARU 18

4. Connections and displays 19

4.1. Power supply 19

4.2. Ethernet connection 20

4.3. RS422-/485 connection 20

4.4. RS232 connection 20

4.5. ERU connection 21

4.6. RDR connection 21

4.7. M-ARU connection 22

4.8. UART transmission (RS232, RS422, RS485 or similar) 23

4.9. Ethernet transmission 25

4.10. Anschlüsse M-ARU, RS232, 25

4.11. Antenna Connection 29

4.12. LED 29

4.13. Buzzer 29

5. Software 30

5.1. System requirements 30

5.2. Installation 30

5.3. Operation 34

6. Operating the reader 39

6.1. Communication 39

6.2. Application 46

6.3. Basic read functions 48

6.4. Basic writing functions 51

6.5. GPIO functions 53

6.6. Expert settings 58

6.7. Test Gen2 functions 63

6.8. © KRAI Setting 67

6.9. App Manager 70

6.10. Access Manager 70

6.11. Ethernet password 77

6.12. configuration password 79

7. Programming the Reader 80

7.1. Preparation 80

7.2. Using the examples with Windows 80

7.3. Using the examples with Linux 80

7.4. Using the examples with Linux on a PC 80

7.5. Using on an embedded system 80

7.6. Installation Embedded Linux Development Kit (ELDK) 81

7.7. Installation Linux application 82

8. List of references 85

9. Contact address 86

Key

Caution!	Indicates a potentially dangerous situation which, if disregarded, can lead to injuries ranging from minor to severe and/or damage to the unit.
Note	Information intended to make a specific topic easier to understand and/or enable optimal use of the unit functions.

General safety notes

Important!

Before starting installation work or replacing the unit, the accompanying manual must be read carefully and its contents understood.

The detailed information in the data sheets and in this manual must be complied with carefully during installation and operation of the reader!

The installation team must be properly qualified and familiar with the safety regulations applicable in the country concerned.

Connection, installation and maintenance work, as well as all other work on the unit, may only be carried out by properly qualified and trained employees.

The unit may only be used for the purpose intended by the manufacturer.

Unauthorized changes to the unit and the use of spare parts and peripheral devices which are not sold or recommended by the manufacturer can result in fires, electric shocks and injuries. Such actions therefore result in exclusion of liability and make the manufacturer’s warranty/guarantee null and void.

The applicable version of the manufacturer’s warranty is that which was valid at the time of purchase. We accept no liability for unsuitable manual or automatic adjustments made to the unit's parameters and inappropriate use of the unit.

Repairs may only be undertaken by personnel authorised to perform them. Opening or attempting to repair the unit makes all guarantee/warranty claims null and void! Improper work on the unit may jeopardise electrical safety.

The manufacturer is not liable for accidents caused by the user opening the unit!

When carrying out work on the unit, the valid safety regulations must be complied with.

Supply voltage

Important!

Make sure that the mains cable (power supply cable) is not damaged. If the mains cable is damaged, the device must not be used. Instead it must be disconnected from the mains and repaired by a qualified technician. Use only the power supply unit supplied!

Risk of fatal injury due to electric shock!

The device may be operated only at the stated supply voltage (see the rear of the device or external power supply unit)!

If the supply voltage is too high, there is a risk of fire!

Ventilation

Important!

Appropriate means are provided to dissipate the heat generated within this equipment. The device must however not be installed in a cabinet or on shelves with insufficient ventilation. The ventilation slots on the device must not be covered.

There is a risk of fire!

Moisture, direct sunlight, heat, naked flames

Important!

Protect the device from moisture, dripping water and spraying water. The device must not be placed close to sources of heat, exposed to direct sunlight or operated in a damp environment. The device may not be operated only is moderate climatic zones. It is unsuitable for use under tropical conditions! Do not place anything which has a naked flame on the device! [1)]

There is a risk of fire!

Radiated electromagnetic fields

Important!

CE marking for the Kathrein RFID reader with type designation "E6"

This reader is designed “E6” for operation as per EN 302208. When the unit is operated with antennas connected, the human exposure regulations in accordance with EN 50364 must be complied with. Ensure a minimum clearance of 20 cm between the antenna and the human body, and comply with the operating instructions for RFID antennas. In some circumstances, heart pacemakers may suffer interference if wearers are close to the antenna when the unit is in operation (reader and antenna). In case of doubt, the people affected are requested to contact the manufacturer of their pacemaker or their doctor.

The reader output power must be reduced as a function of the antenna cable length and the antenna gain.

Marking for the Kathrein RFID reader with type designation "U6"

The reader with the identifier „U6“ are designed to operate under FCC Part 15 and can be found at the FCC homepage under grantee code „WJ9“.

This device complies with part 15 of the FCC Rules. Operation is subject to the following two conditions: (1) This device may not cause harmful interference, and, (2) This device must accept any interference received including interference that may cause undesired operation.

Industry Canada

Le présent appareil est conforme aux CNR d‘Industrie Canada applicables aux appareils radio exempts de licence. L‘exploitation est autorisée aux deux conditions suivantes : (1) l‘appareil ne doit pas produire de brouillage, et (2) l‘utilisateur de l‘appareil doit accepter tout brouillage radioélectrique subi, même si le brouillage est susceptible d‘en compromettre le fonctionnement.

Under Industry Canada regulations, this radio transmitter may only operate using an antenna of a type and maximum (or lesser) gain approved for the transmitter by Industry Canada. To reduce potential radio interference to other users, the antenna type and its gain should be so chosen that the equivalent isotropically radiated power (e.i.r.p.) is not more than that necessary for successful communication.

This radio transmitter has been approved by Industry Canada to operate with the antenna types listed at page 8 with the maximum permissible gain and required antenna impedance for each antenna type indicated. Antenna types not included in this list, having a gain greater than the maximum gain indicated for that type, are strictly prohibited for use with this device.

Modifications or conversions which are carried out on this unit without the express permission of Kathrein may invalidate the FCC permit for the operation of this unit.

Type	Order-No.	Shortened designation	Gain
WiRa 30° FCC	52010087	Wide Range-Antenna FCC, 902-928 MHz, 30° circular	11dBiC/ 8DBi
WiRa 70° FCC	52010079	Wide Range-Antenna FCC, 902-928 MHz, 70° circular	typ. 11dBi
MiRa FCC	52010083	Mid Range-Antenna FCC, 902-928 MHz, 1000° circular	2.5dBi
S-MiRa ETSI/FCC	52010172	Short-Range-Antenna FCC, 865-928 MHz, 100° circular	typ -10dBi
U-LoRa ETSI/FCC	52010092	Ultra Low Range-Antenna FCC, 865-928 MHz	-30dBi
LoRa FCC	52010085	Low Range-Antenna FCC, 902-928 MHz	-15dBi
WiRa-30-linear-FCC	52010249	Wide Range-Antenna 30° linear FCC, 902-828 MHz, 30° linear	typ. 11dBi
WiRa-40-linear-FCC	52010252	Wide Range-Antenna 40° linear FCC, 902-828 MHz, 40° linear	typ. 13dBi
SMSH-30-30ETSI-FCC-Antennenmodul	52010219	Smart Shelft-Antenna, 865-928 MHz, non cascadable	-7dBi

Note regarding proper installation:

Note

To meet part 15 of the FCC regulations in the United States, the system must be properly installed to guarantee adherence to the certification regulations according to part 15. The operator and the specialist company which carries out installation are responsible for ensuring that only certified systems are used in the United States. Use of this system in any other combination (e.g. several antennas which transmit the same information in the same location) is expressly prohibited.

Note

Following corresponding tests, it has been ascertained that this unit adheres to the limit values for class B digital units in accordance with part 15 of the FCC regulations. These limit values are intended to provide private user's systems with appropriate protection against harmful radio interference. This unit generates and uses energy in the radio frequency range and is also able to radiate this; if it is not installed and used in accordance with the regulations, the unit may cause harmful radio communication interference. However, there is no guarantee that interference will not occur in a specific system. If this unit causes harmful radio or television reception interference, which can be ascertained by switching the unit on and off, we recommend that the user attempts to rectify this interference via one or more of the following measures:

- *Realign the receive antenna or change its position.*
- *Increase the distance between the unit and the receiver.*
- *Plug the unit into a socket in a current circuit other than that to which the receiver is connected.*
- *Seek advice from the retailer or an experienced radio/television technician.*

Warning regarding exposure to RF radiation

Important!

FCC RF Radiation Exposure Statement

This transmitter must not be co-location or operating in conjunction with any other antenna or transmitter.
This equipment complies with FCC RF radiation exposure limits set forth for an uncontrolled environment.
This equipment should be installed and operated with a minimum distance of 20 centimeters between the radiator and your body.

This equipment complies with IC RSS-102 radiation exposure limits set forth for an uncontrolled environment. This equipment should be installed and operated with minimum distance 20cm between the radiator & your body.

2.1. The reader

The Kathrein RFID (Radio Frequency Identification) reader RRU4 is a multi-protocol-capable device for reading active and passive RFID tags in the frequency range from 865 to 868 MHz for Europe type “E6” and 902 to 928 MHz for the American market type “U6”. As supplied the unit can read and write tags in accordance with the EPC-Gen2 standard. Additional protocols can be loaded using software updates.

The device has a maximum of four external antenna ports for connection of the transmission/reception antennas for communication with RFID tags.

For integration into a variety of infrastructures, the device has different communication interfaces depending on the variant. The power supply is provided by a 4-pin M12 panel connector in A coding.

2.2. RFID system

An RFID system consists of the control computer of the actual reader, antennas, antenna connection cables and the tags. The figure below shows the schematic structure of the system:

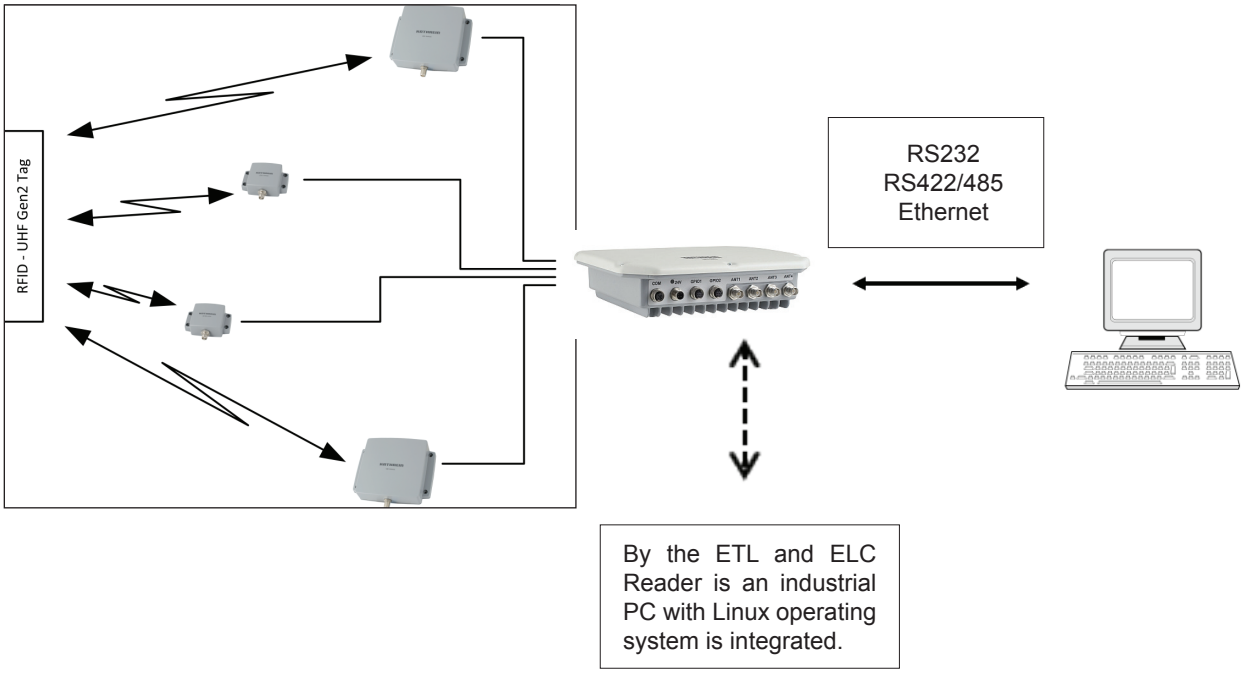

Figure: continuous operation ETL and ELC RFID system

The tags consist of an antenna and a small chip. The chip is the true carriers of the information,

the EPC number. This number can be identified products or product groups. Alternatively, the EPC can be overwritten with new information.

To read the tag information, the reader sends an RF carrier by an active antenna and thus supplies the tags in the RF field with energy.

If the information in one tag should be read, this tag should be first selected (inventoried) from the population of tags. Upon successful completion of the inventory, the EPC number of each tag can be read and sent to the PC. Additional information can be attached to the EPC, for example the antenna which read it the time point at which it was read.

Important!

The reader operates using the frequency hopping process, so as to avoid faults and interference between readers. Within the FCC area this procedure is mandatory. The readers changes its transmission frequency randomly, with equal distribution across the 52 available channels. Each channel is used for max. 400ms in an interval of 20s.

For testing and parameterizing the reader the Demo Software“Reader Start v2”can be used.

The communication between the“Reader Start v2” and the reader is based on the DLL, which includes the communication protocol ((A)). For specific applications the user can build its own control software based on the reader DLL.

The DLL includes all the relevant commands and functions, which are needed to control the reader

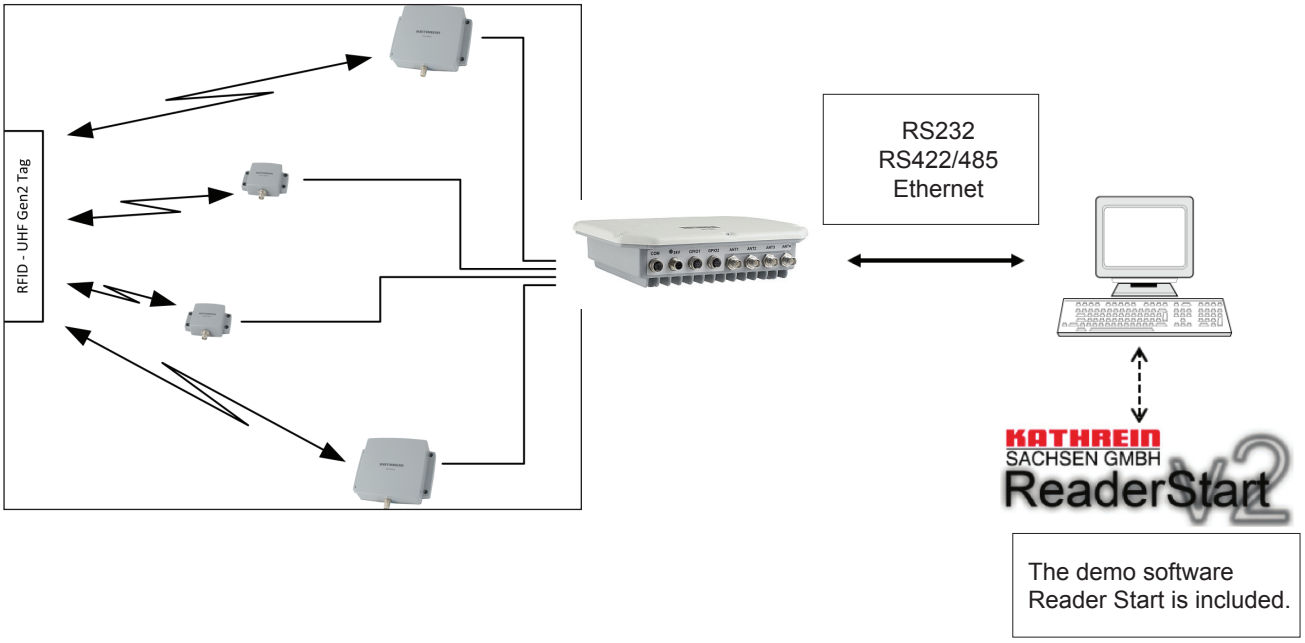

Figure: Testing and configuration of the RFID system

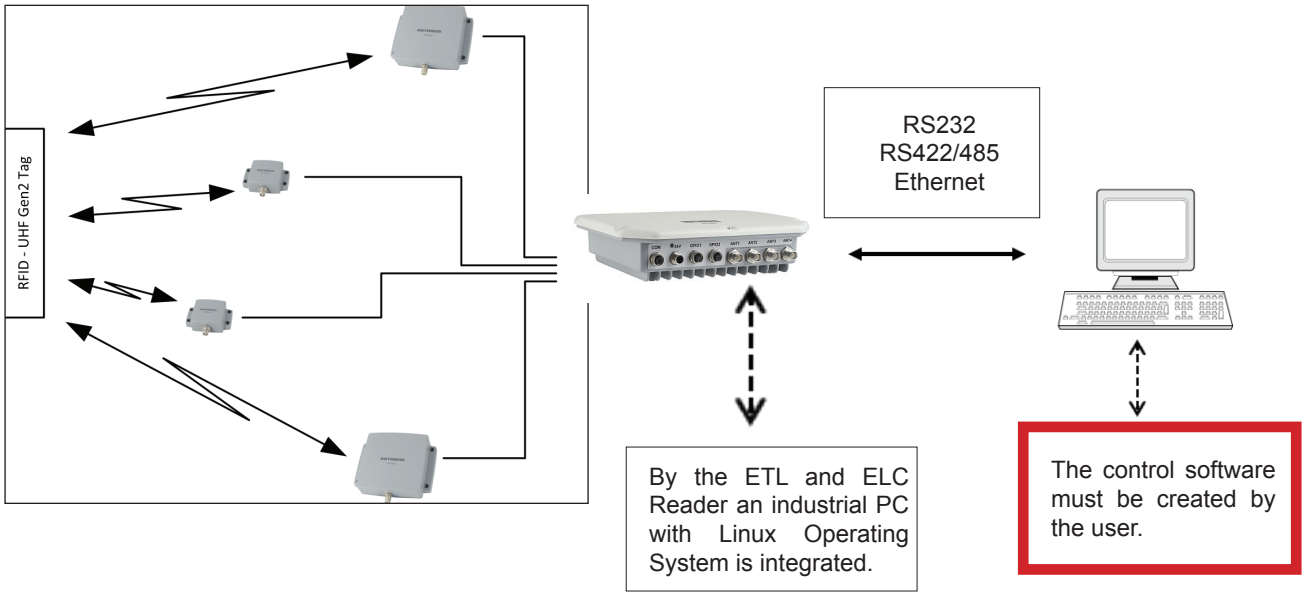

The user-specific control software can run on ETL reader directly. Thus, a stand-alone operation without permanent network connection is possible.

Figure: Continuous operation of the ETL and ELC RFID system

2.3. Kathrein RFID Antenna Interface © KRAI

With the new © KRAI product series Kathrein has introduced a revolutionary system.

By using Kathrein © KRAI antennas, reading rates can be increased by 33% compared to simple circular antennas.

The Kathrein-RFID Antenna Interface © KRAI consists of a digital control bus, which enables connection between the RFID reader and the RFID antennas in order to allow control and regulation tasks in remote antennas.

The phase control elements integrated in the © KRAI antennas enable static or dynamic adjustment of antenna characteristics.

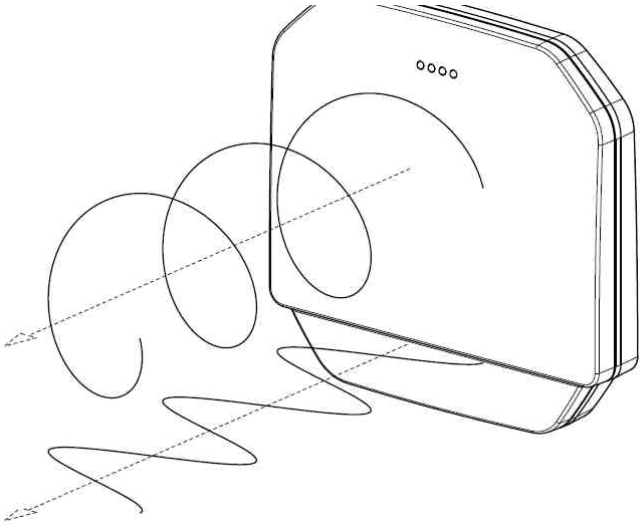

Due to this, four different polarizations can be selected for the new 70° Wide Range antenna (type 52010193 WIRA-70-KRAI-ETSI): RHCP / LHCP/ horizontal linear / vertical linear

One can choose between static polarization and automatic switch-over. As the Kathrein-RFID Antenna Interface © KRAI is transmitted over the standard antenna cable, no additional lead or connection is required to control the new antenna types.

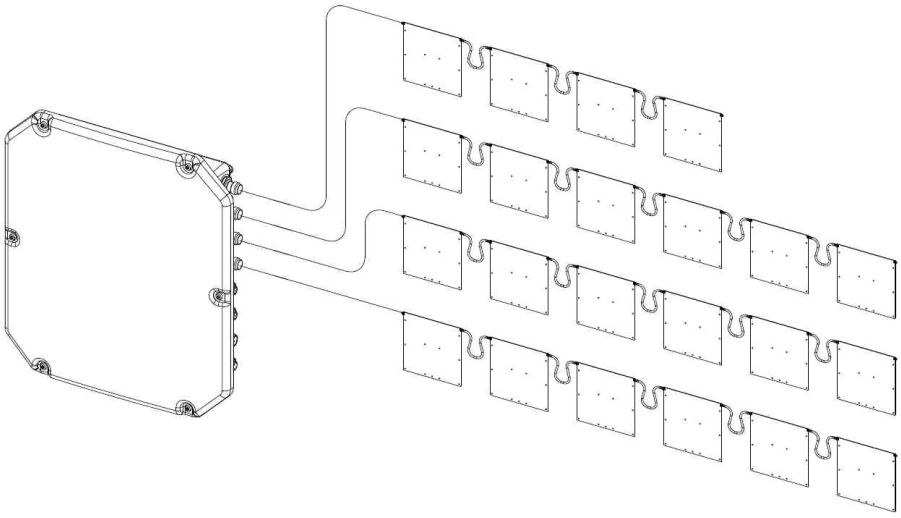

The Kathrein RFID © KRAI system permits the cascading of up to 8 SMSH antennas at a single antenna port. This allows selective access to up to 32 individual antennas. This allows the reading result to be linked to the antenna recognition (e.g. antenna 3 (5)) and be output.

2.4. Wide Range © KRAI antenna

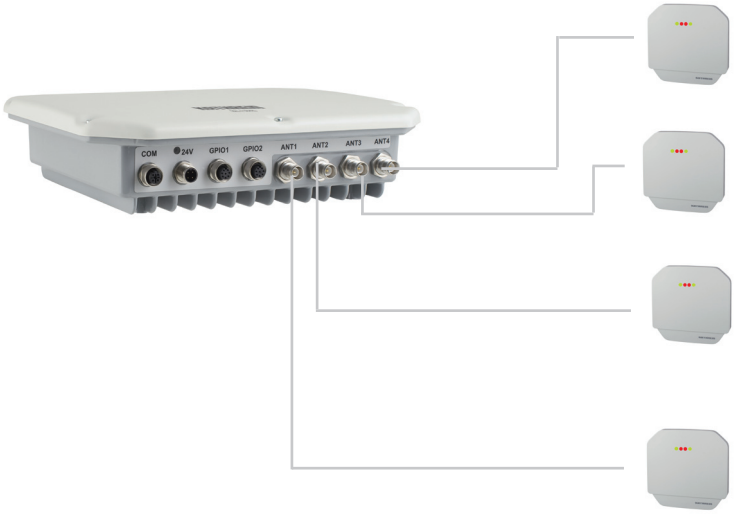

Note

WiRa-70-KRAI antennas cannot be cascaded.

2.5. SMSH © KRAI planar antenna module:

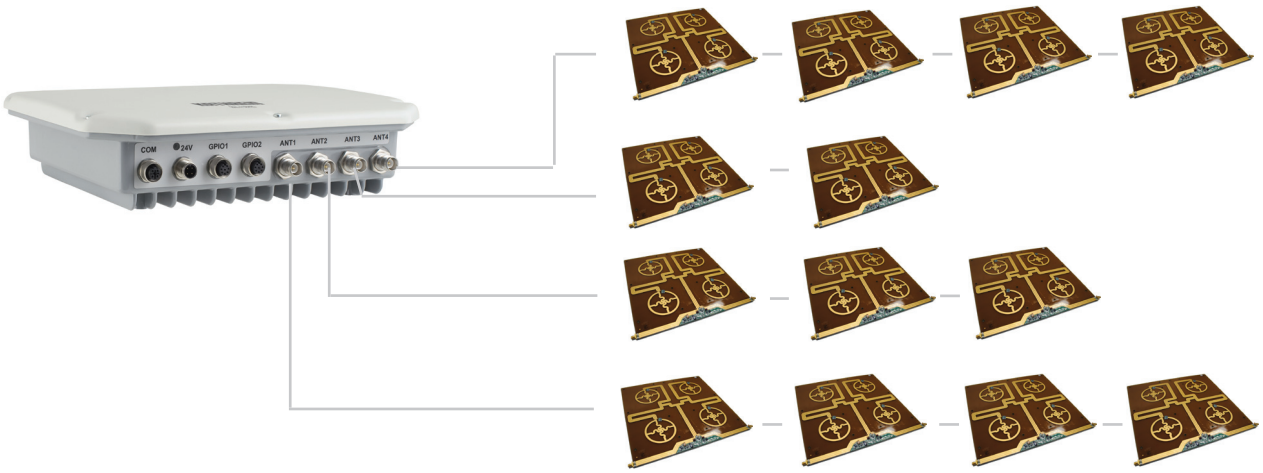

A maximum of 8 SMSH antennas can be cascaded per reader port.

Note

Please ensure that the firmware of your KRAI-capable reader and the reader start configuration software are release 2.40 or higher.

2.6. Further reference material

In order to configure the reader correctly and adapt it to the respective application, detailed knowledge of the EPCGlobal standards of GS1 is necessary ((E)). This standard describes the principle of operation of the interface between the tag and reader.

The parameters available for the configuration of the reader is available as described in the “configuration manual Reader” ((B))

The reader is controlled via the Kathrein-Reader protocoll (KBRP). The document “communication protocol” ((A)) in the current version contains a detailed description of the protocol

„communication protocol“	((A))	for software developers
„configurational manual reader“	((B))	for commissioning
„installation manual reader“	((C))	Setup and installation
"installation manual antenna“	((D))	Setup and installation
„EPCGlobal standard“	((E))	for software developers
„Putty is SSH and Telnet-Client“	((F))	for software developers

((E)) EPCTM Radio-Frequency Identity Protocols Class-1 Generation-2 UHF RFID in version V1.2.0 : www.epcglobalinc.org

Note

The versions of the documents must match the software version of the reader. The CD supplied contains the current documents for the reader firmware supplied.

2.7. Scope of supply

The package includes a CD next to each reader with a parameter, and test software (Reader Start), programming examples, DLL and operating

2.8. Accessories

The following accessories are available for the reader (if you have questions about the accessories, please contact our Sales Office):

- Antennas: For use with UHF-RFID antennas; we recommend the Kathrein antenna types ULoRa, LoRa, MiRa, WiRa. These antenna types are available for all frequency ranges.The mentioned types of antennas are available for all frequency ranges and in screwed condition tight IP 65.

- **Antenna cable**

Order number	Type	Connector 1	Connector 2	Lenght (cm)
52010174	R-AC 3 TNC-TNCR	TNC	TNC Reverse	LL240 flex, 300
52010175	R-AC 6 TNC-TNCR			LL240 flex, 600
52010176	R-AC 10 TNC-TNCR			LL240 flex,1000
52010177	R-AC 15 TNC-TNCR			LL240 flex,1500
52010250	R-AA N-TNC	N-Socket	TNC (socket)	LL440 flex,1500
52010090	R-AC 3 SMA-TNCR	SMA (socket)	TNC (socket)	RG 58, 300
52010208	R-AC 05 SMA-SMA	SMA (socket)	SMA (socket)	RG 58, 50

- **Antenna adapter**

Order number	Type	Product type
52010178	R-AA TNC-N(f-m)	Adapter TNC-N (f-m)
52010243	R-AA TNC-SMA (f-m)	Adapter SMA (f-m)

- **Cable sets (without antenna cable)**

Order number	Type	for Series	Product type
52010125	CK-RRU RS4	RRU4/ARU4	Power supply cable, RS 422/485, GPIO, length 1.5 m
52010126	CK-RRU ETG	RRU4/ARU4	Power supply cable, Ethernet interface cable, GPIO-cable, length 1.5 m
52010189	CK-M-ARU RS	M-ARU	Combination cable for power supply GPIOs, RS232 interface length 1.5 m
52010209	CK-M-ARU PoE	M-ARU	Combination cable for power supply and PoE interface, length 1.5 m
52010238	R-CC 10 ETH	RRU4/ARU4/ M-ARU	Ethernet Connecting Cable, length 10 m
52010239	R-CC 10 GPIO	RRU4/ARU4	GPIO Connecting Cable, length 10 m
52010240	R-CC 10 DC	RRU4/ARU4	DC power supply Connecting Cable, length 10 m
52010241	R-CC 10 RS	M-ARU	Connecting Cable M-ARU, length 10 m

- **Mounting Accessories**

- **Montageset und Wand-/Masthalterung**

Bestellnummer	Typ	Bestehend aus
52010005	MK-AMB-100-Outdoor	Poll Mount Kit for 30° WiRa antennas
52010128	MK-WPM-100-100-Outdoor	Wall/Pole Mount Kit for WiRa 70 ° an- ennes and RRU4/ARU4-Readern
52010261	MK-WM-100-100-Indoor	Wall Mount Kit for WiRa 70°antennas and RRU-, ARU- Reader; Indoor
52010262	MK-WPM-100-100-Outdoor	Wall/Pole Mount Kit for WiRa 40°antennas; Outdoor

- **Readers power supply**

Order number	Type	Product type
52010179	R-RPA 115-230V/24V	RRU / ARU 230V power supply with safty plug (Lörar); 24V DC power supply with M12 socket 4-pin, A-coded
52010192	R-ERPA 115-230V/24V	ERU 230V power supply 24V DC cable plug connector 2.5 mm

- **Protective Covers**

Order number	Type	Product type
52010127	Protective covers set for the RRU and ARU reader series	Accessories for RRU4/ARU4 reader with screw caps for 3x antenna input (R-TNC) and 2x digital (M12)

3.1. Selecting the installation site

When the connections are plugged in, the device satisfies the protection class IP65 (RRU and ARU) and class IP40 (ERU and RDR).
When selecting the installation location, make sure there is sufficient space around it for appropriate dissipation of the heat generated by the device. Do not install it close to external sources of heat. The maximum operating temperature listed in the data sheet must not be exceeded. The support surface must have a sufficient lead-bearing capacity/strength.

3.2. Installing the reader

The device has threaded holes at the rear for attaching the reader. The dimensions of the holes pattern can be found in the drawing below. For ease of installation a bracket is available as an accessory, which offers the option of mounting on a mast or wall.

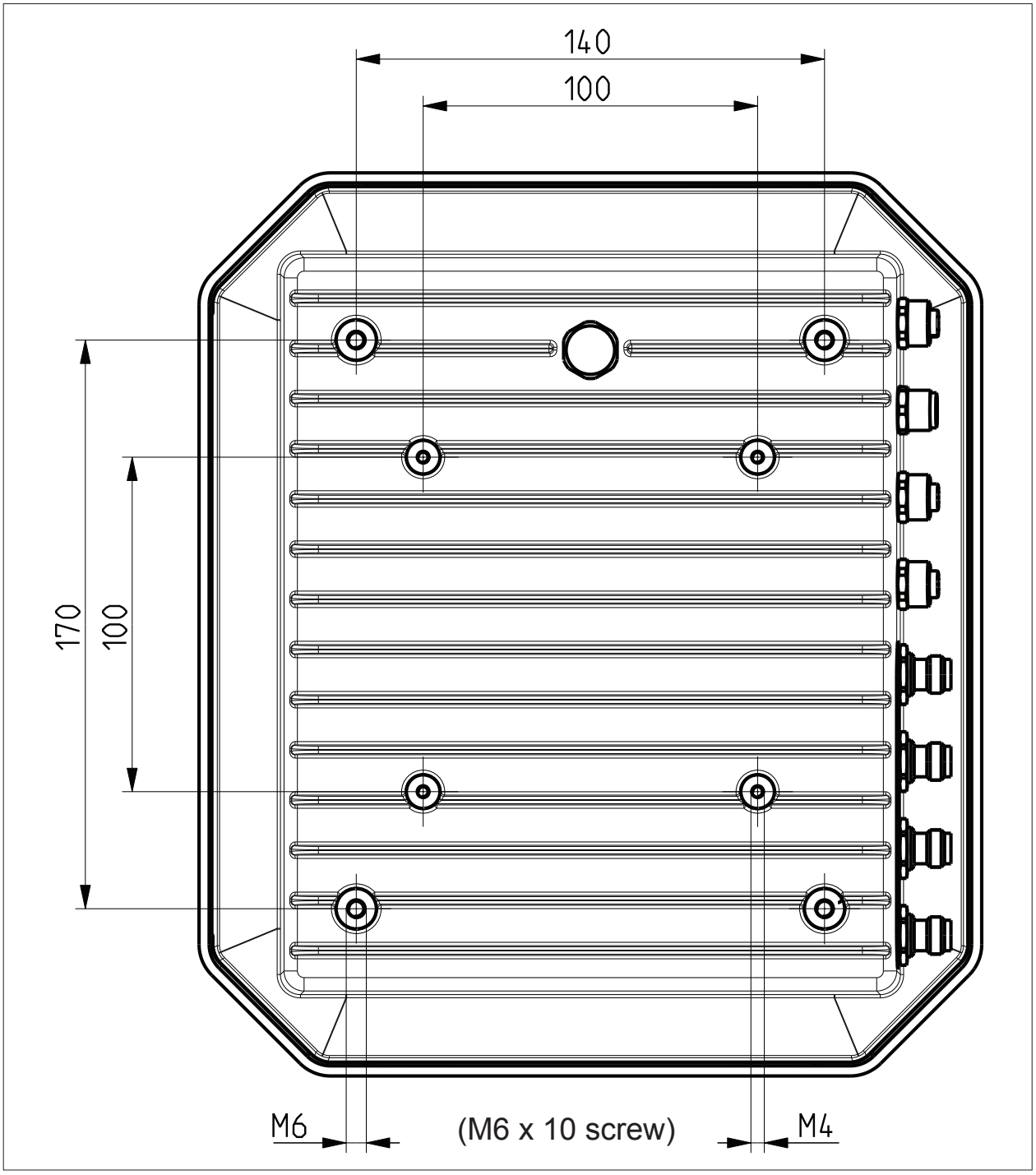

Figure: Far side RRU4 with dimensions

3.3. Installing the reader ERU

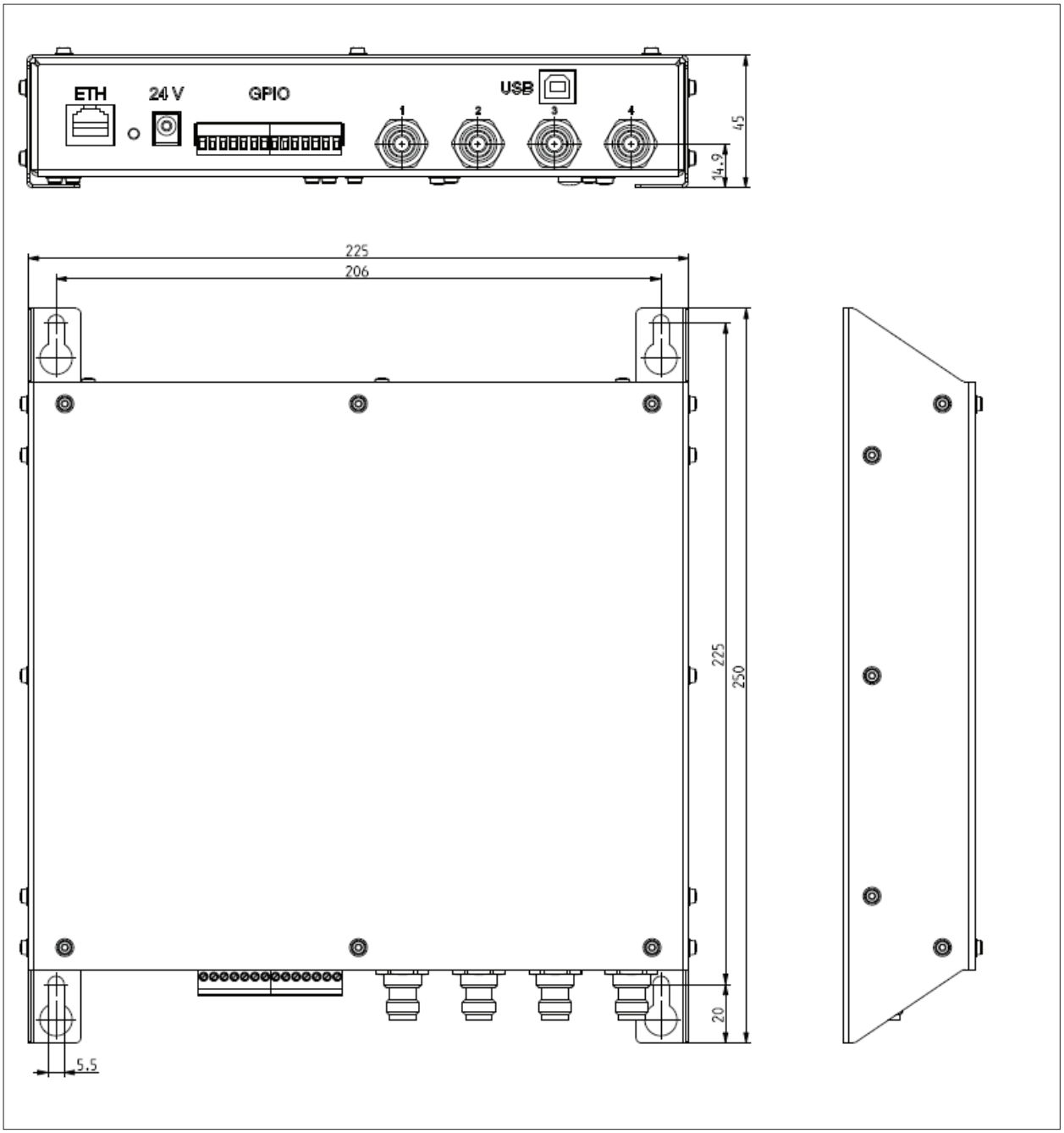

Figure: ERU with dimensions

3.4. Installing the reader RDR

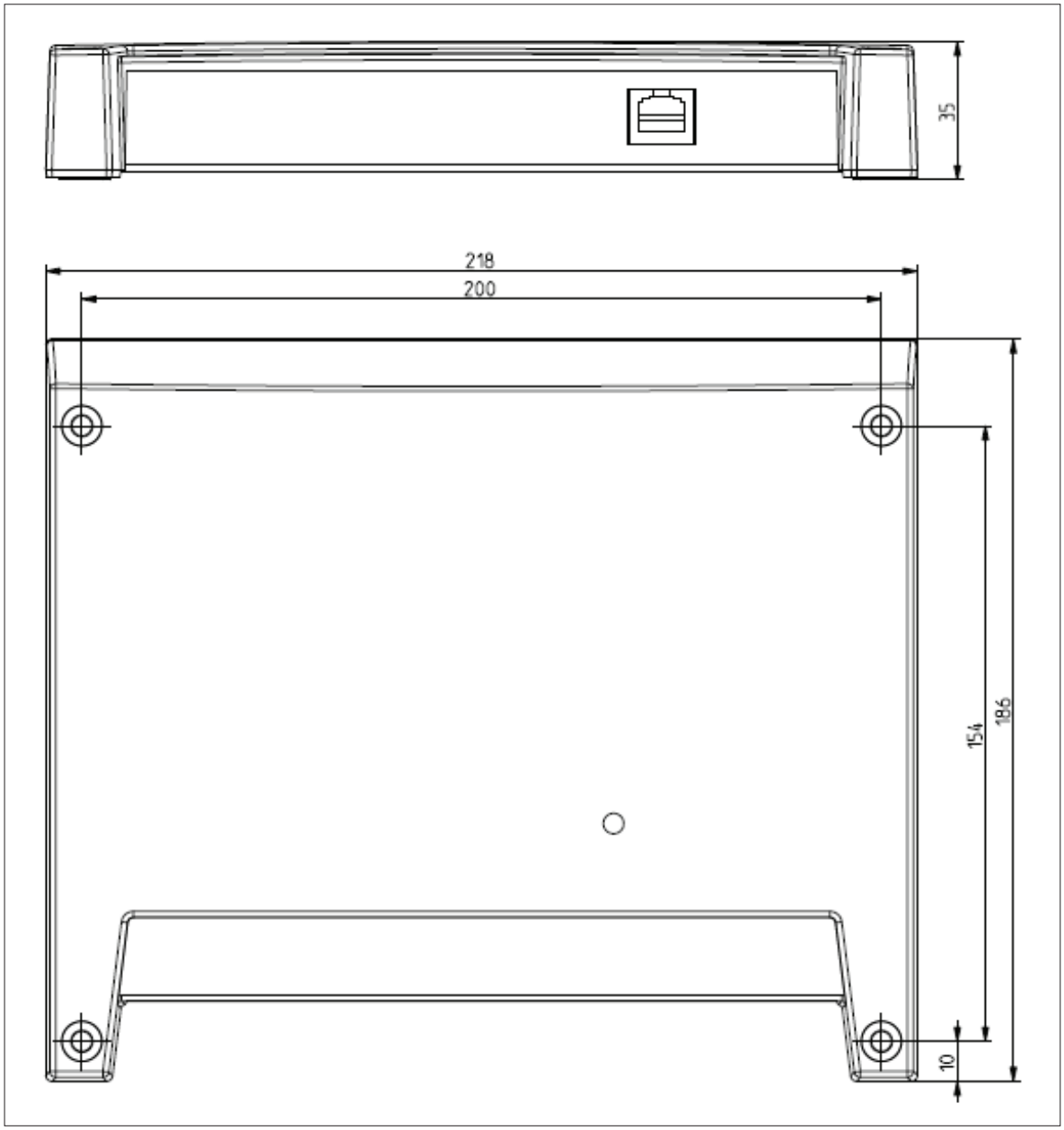

Figure: RDR with dimensions

3.5. Installing the reader M-ARU

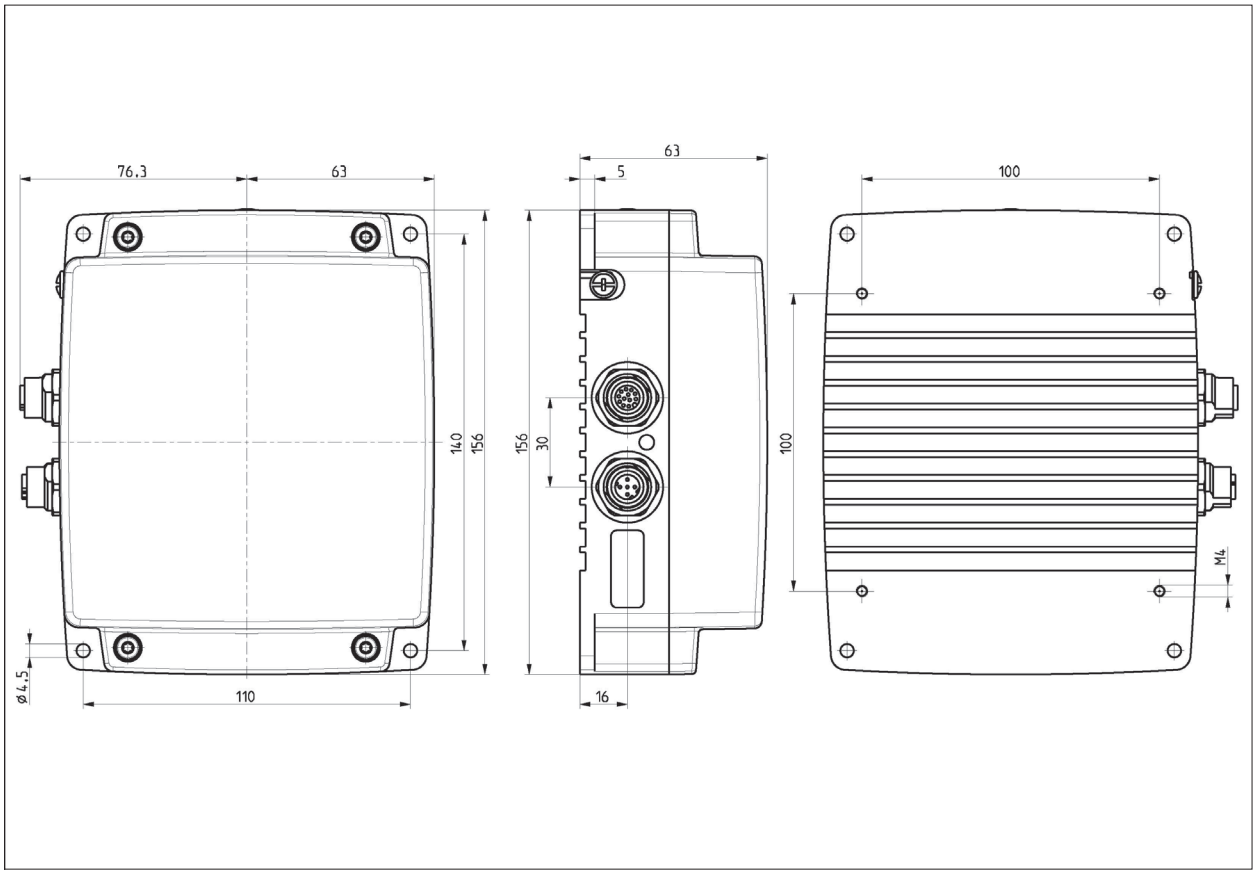

Figure: M-ARU with dimensions

Depending of the device variant, the reader has various connection options. The illustration below shows an RRU and ARU standard reader with all its connection options. Details of the connections and the pin assignments of plugs and sockets are provided in the following pages.

Figure: General view of the RRU4

Sockets, from left to right	Description
1	Communication connection: M12 (depending on the device variant)
2	Power supply connection: M12 male, 4-pin, A-coded
3	GPIO connection 1: M12 female, 8-pin, A-coded
4	GPIO connection 2: M12 female, 8-pin, A-coded
5	Antenna connection 1: R-TNC 50 Ohm
6	Antenna connection 2: R-TNC 50 Ohm
7	Antenna connection 3: R-TNC 50 Ohm
8	Antenna connection 4: R-TNC 50 Ohm
	Status indicators: 3 coloured LEDs (red, green, orange)

4.1. Power supply

The power supply is arranged as a four-pin round-pin plug with and M12 connection thread in A-coding.

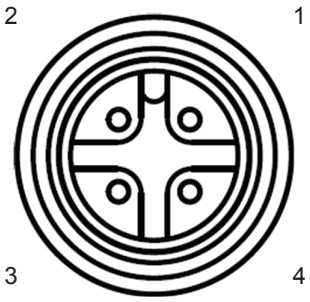

PIN	Allocation
1	+24 V DC
2	
3	GND
4	

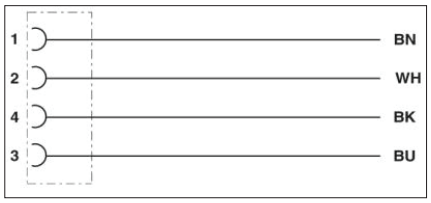

Allocation of the power cable (Order-No.. 52010125 und 52010126)

Note

Only power supply units with power limitation are approved for operation with the device. This means that the secondary side of the power supply unit is limited to a power of maximum 100 W.

4.2. Ethernet connection

This data interface is arranged as a 4-pin M12 socket with D-coding. Only shielded cables may be used.

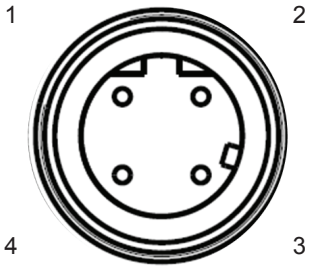

PIN	Allocation
1	TD+
2	RD+
3	TD-
4	RD-

4.3. RS422/485 connection

This interface is arranged as a 5-pin M12 socket with A-coding. Only shielded cables may be used.

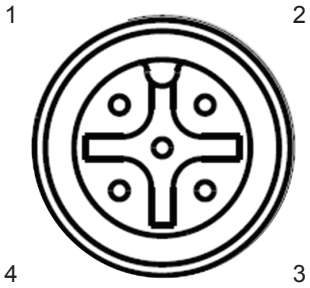

5 Zentral-Pin

PIN	Allocation RS422	Allocation RS485
1	RxD+	RxD/TxD+
2	RxD-	RxD/TxD-
3	TxD+	
4	TxD-	
5	GND	GND

The interface card of the reader is equipped with a combined RS485/RS422 interface. The changeover between RS485 and RS422 is performed using the configuration tool. For operation as RS422, the RS485 cables are connected to RX.

4.4. RS232 connection

This interface is also arranged as a 5-pin M12 socket with A-coding. Only shielded cables may be used.

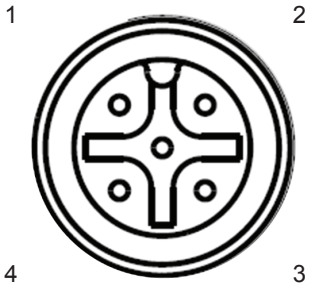

5 Zentral-Pin

PIN	Allocation
1	CTS
2	RxD
3	RTS
4	TxD
5	GND

Allocation of the serial interface cable (Order-No. 52010125) valid for RS232, RS422/485

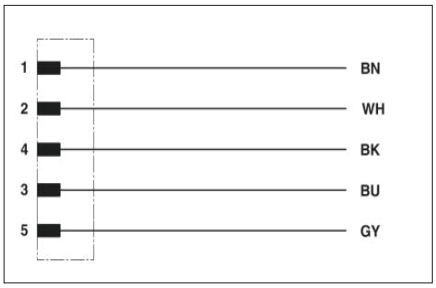

4.5. ERU connection

Power supply:

The power supply is designed as a hollow connector 2.5 mm.

PIN	Allocation
inner conductor	+24 V
outer conductor	Masse

Port communication interface:

To communicate with the reader, the ERU Ethernet connection via a standard RJ45 connector can be used. Alternatively, the reader can ERUs through a standard USB type. B port can be controlled.

Digital inputs and outputs:

The digital inputs and outputs are provided via a fourteen-pin terminal block. The control and evaluation are provided by the internal software.

PIN	Allocation
1	power supply +
2	Masse
3	INPUT_0
4	INPUT_1
5	INP_COMMON
6	INPUT_2
7	INPUT_3
8	power supply +
9	Masse
10	OUTPUT_0
11	OUTPUT_1
12	OUTPUT_COMMON
13	OUTPUT_2
14	OUTPUT_3

4.6. RDR connection

Port communication interface:

To communicate with the RDR reader a Power over Ethernet (PoE) connection via a standard RJ45 connector is used.

4.7. M-ARU connection

Supply voltage PoE:

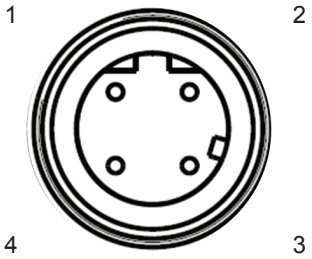

PIN	Belegung
1	TD+
2	RD+
3	TD-
4	RD-

Supply voltage local GPIO/RS232/Ub

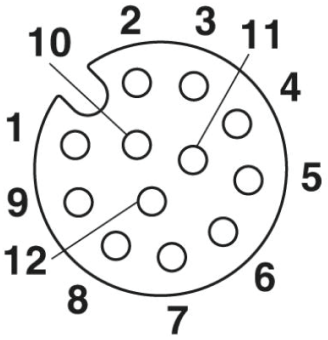

PIN	Allocation
1	GPIO – OUT3
2	GPIO – GND
3	GND
4	RS 232 – GND
5	RS 232 – RxD (mit TxD vom PC verbinden)
6	RS 232 – TxD (mit TxD vom PC verbinden)
7	+ 24 V DC
8	GPIO – OUT2
9	GPIO – IN3
10	GPIO – OUT1
11	GPIO – IN2
12	GPIO – IN1

4.8. UART transmission (RS232, RS422, RS485 or similar)

4.8.1. Bit transmission layer (physical layer)

A full or half-duplex connection such as RS232, RS422 or RS485 is used for the physical layer.

4.8.2. Data link layer

Transmission is in frames and blocks. A block comprises a maximum of 256 frames. A frame comprises a maximum of 256 bytes, of which a maximum of 250 bytes can be user data. The result is a maximum block size of 64000 bytes of user data.

The data link layer is used to safeguard the data between sender and recipient. The sender receives a response from the recipient for each frame received. If the sender does not receive a response from the recipient within a time window of 350 milliseconds after sending a frame, the frame sent is repeated until the error counter signals the cancellation of the transmission.

4.8.2.1. Structure of a frame

5A LL SS FF DD ... DD P1 P2

5A: Start code for synchronisation
LL: Number of bytes in the frame not including the start code
SS: Status byte
FF: Frame number
DD: User data
P1: 16-bit checksum low byte
P2: 16-bit checksum high byte

4.8.2.2. Start code and synchronisation

The start code is used to synchronise the recipient to the sender. It further allows the receiver to synchronise to the start of a frame when no data have been received for 15 milliseconds.

4.8.2.3. Status byte

The status byte has the following significance:

50: Data packet
A0: Response: “OK”
A1: Response: “Memory error” (the receiver was unable to allocate any memory for the data block received)

A response is only 3 bytes long and is not CRC checked.
“OK” response: 5A 02 A0
“Memory error” response: 5A 02 A1

4.8.2.4. Frame number

The frame number defines how many more frames there are in this data block. Only the first frame in a data block can be shorter than 256 bytes. Each additional frame must have a length of 256 bytes (length byte LL is FF).

It is therefore possible to calculate the block size from the first frame number.

For example:

A block with 700 bytes of user data is to be transmitted. For this purpose the block is divided into three frames.

1. frame: 5A CD 50 02 – there now follow 200 bytes of user data – P1 P2
2. frame: 5A FF 50 01 – there now follow 250 bytes of user data – P1 P2
3. frame: 5A FF 50 00 – there now follow 250 bytes of user data – P1 P2

The receiver can use the frame number of the first frame (here 02) and its length byte to calculate the block size (block size = frame number * 250 bytes + length byte -5) (here in the example: 2 * 250 bytes + 205 bytes - 5 bytes = 700 bytes), and reserve an appropriate amount of memory for the data.

4.8.2.5. User data

User data are the bytes in a frame that flow into the block transmitted.

4.8.2.6. Checksum

The checksum is calculated using the polynomial x^16 + x^12 + x^5 + 1 with a pre-initialisation of 0x0000 from the start code to the last user data byte.

4.8.3. Network layer

As the KBRP is a point-to-point protocol, there is no network layer.

4.8.4. Transport layer, session layer, presentation layer

Do not exist.

4.8.5. Application layer

The application layer transmits data blocks from 1 to a maximum of 64000 bytes.

4.9. LLRP-Protocol

Based on the communication protocol TCP, the Kathrein RFID reader with the Linux operating system can handle the so called Low Level Reader Protocol (LLRP).

This is a by EPCglobal (http://www.epcglobalinc.org/standards/llrp) standardized communication interface between RFID reader and a LLRP-enabled application software. The default port for LLRP is 5084.

This LLRP protocol is roughly divided into the following parts:

- Automatic query of the reader functions by the application software
- Configuration of the reader functions by the application software
- Triggering of read and write operations on the air interface by the application software
- Transfer of the found tag data to the application software

To start the LLRP application, please use the AppManager of the ReaderStart Sw. There you can load the LLRP protocol engine with „Install App“ then start with „Start App“.

To test the Kathrein reader with the LLRP protocol you can use the open-source programming tool „Eclipse (IDE)“. With the so called LLRP Commander the Reader can be controlled and operated.

Note

Eclipse (IDE) and LLRP Commander are not part of the Kathrein RFID SW

4.10. Ethernet transmission

When communication to our reader is via Ethernet, a data transmission layer is also used, as for serial communication.

The transmission layer via Ethernet looks much simpler here, because the TCP/IP protocol already provides a data security layer. All we need to add are the packet start and packet end, since TCP/IP is a streaming protocol.

4.10.1. Frame structure

A frame is structured as follows:

Start + Data block + End

The start consists of 0xAA 0xBB 0x01 0x01, where the first 1 is the data transmit byte and the second 1 a stuff byte. The end consists of 0xAA 0xCC. If the byte 0xAA occurs in the KBRP frame, it must be doubled (0xAA → 0xAA 0xAA)

4.10.2. Port

The TCP communication port is the Port 4007.

4.10.3. Example

As an example the frame for “ASyncGetEPCs” is shown. The ID for this command is the “0x0111” which then causes the frame to appear as follows:

0xAA 0xBB 0x01 0x01 0x11 0x01 0xAA 0xCC

4.11. Digital inputs and outputs

The activation and evaluation can be performed using the software *ReaderStart v2*, with the DLL supplied, or by access to the reader protocol.

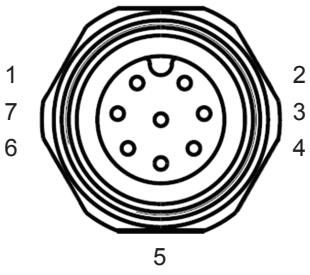

Pin	GPIO 1	GPIO 2
1	OUT_CMN	OUT_CMN
2	INPUT 4	INPUT 1
3	INP_CMN	INP_CMN
4	GND	GND
5	UB	UB
6	OUTPUT 4	OUTPUT 2
7	OUTPUT 3	OUTPUT 1
8	INPUT 3	INPUT 2

Allocation of the GPIO interface cable (Order-No. 52010125, 52010126)

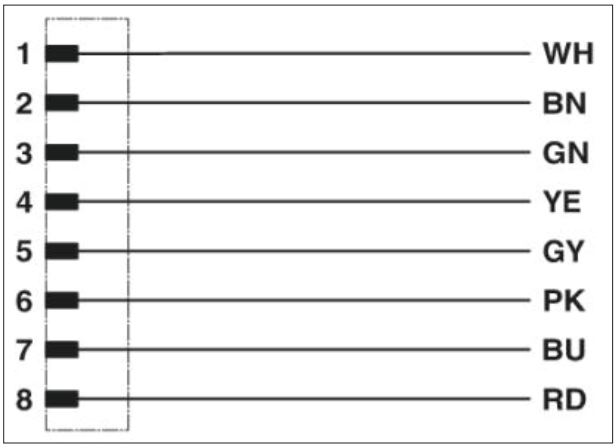

The digital inputs and outputs are communicated via two eight-pin sockets in A-coding with M12 connection threads. The inputs are double isolated from the power supply of the reader and can be operated irrespective of the polarity of the input signal. For this reason there is a common pin for the inputs (INP_CMN). The connection variants for the inputs are shown below. Depending on the application, the power to the inputs can be double insulated from the external power supply to the reader, or not double insulated from it.

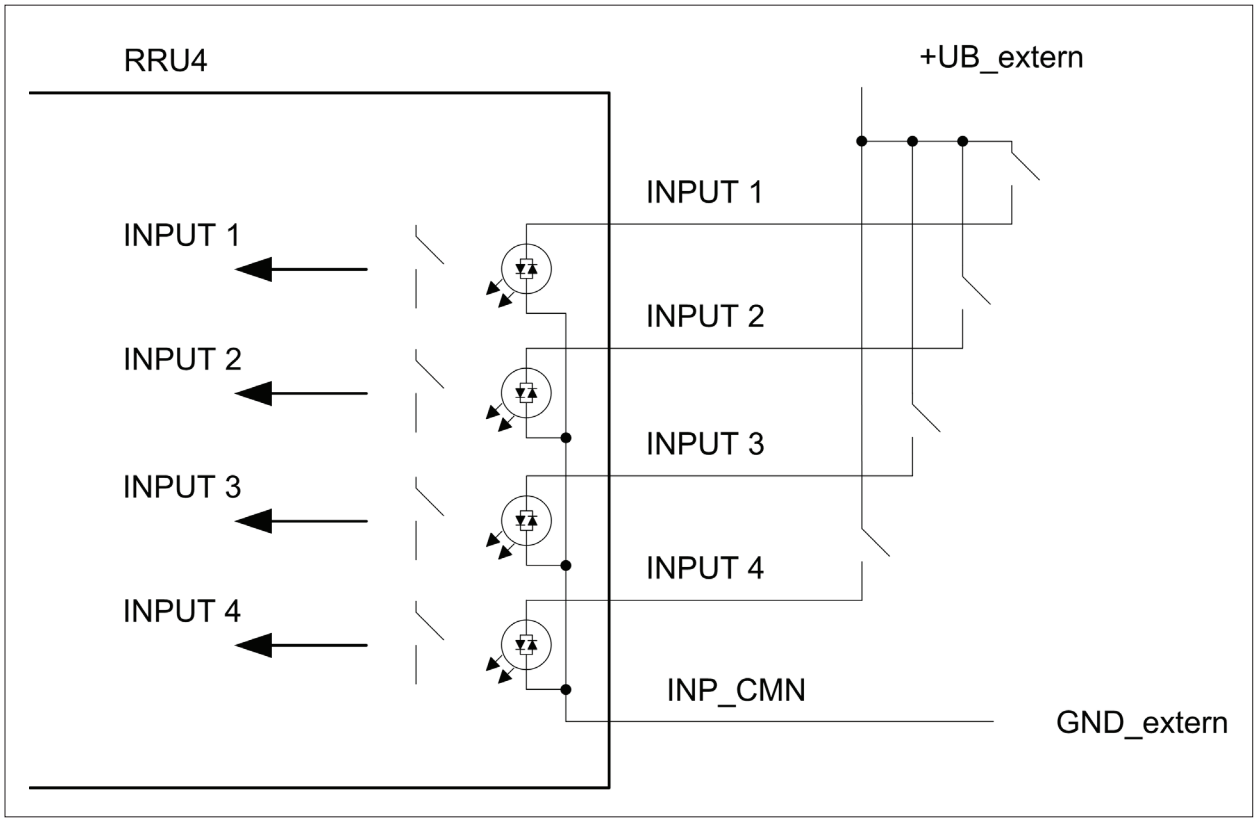

Figure: Inputs double insulated

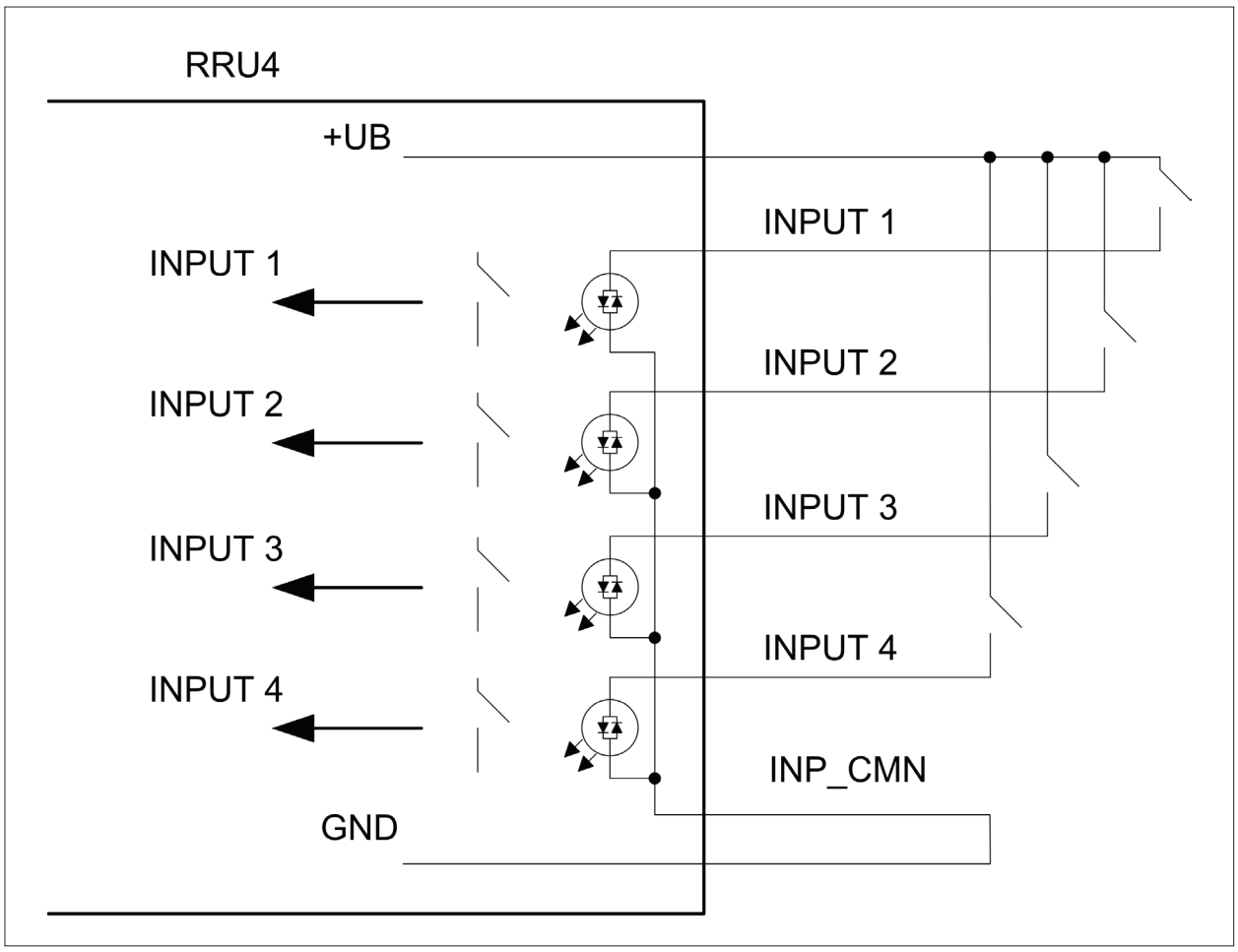

The outputs are also double insulated from the power supply to the reader and have a common pin (OUT_CMN). If the double insulation is not required, the power supply can also be taken directly from the reader.

Note

Please note that the load per channel is limited to a maximum of 0.5 A, and the total load across all the channels must not exceed 1.5 A. The inputs and outputs are designed for a maximum voltage of 30 V DC. Further information can be found in the data sheet for the reader.

The connection examples for the outputs are shown in the next illustrations.

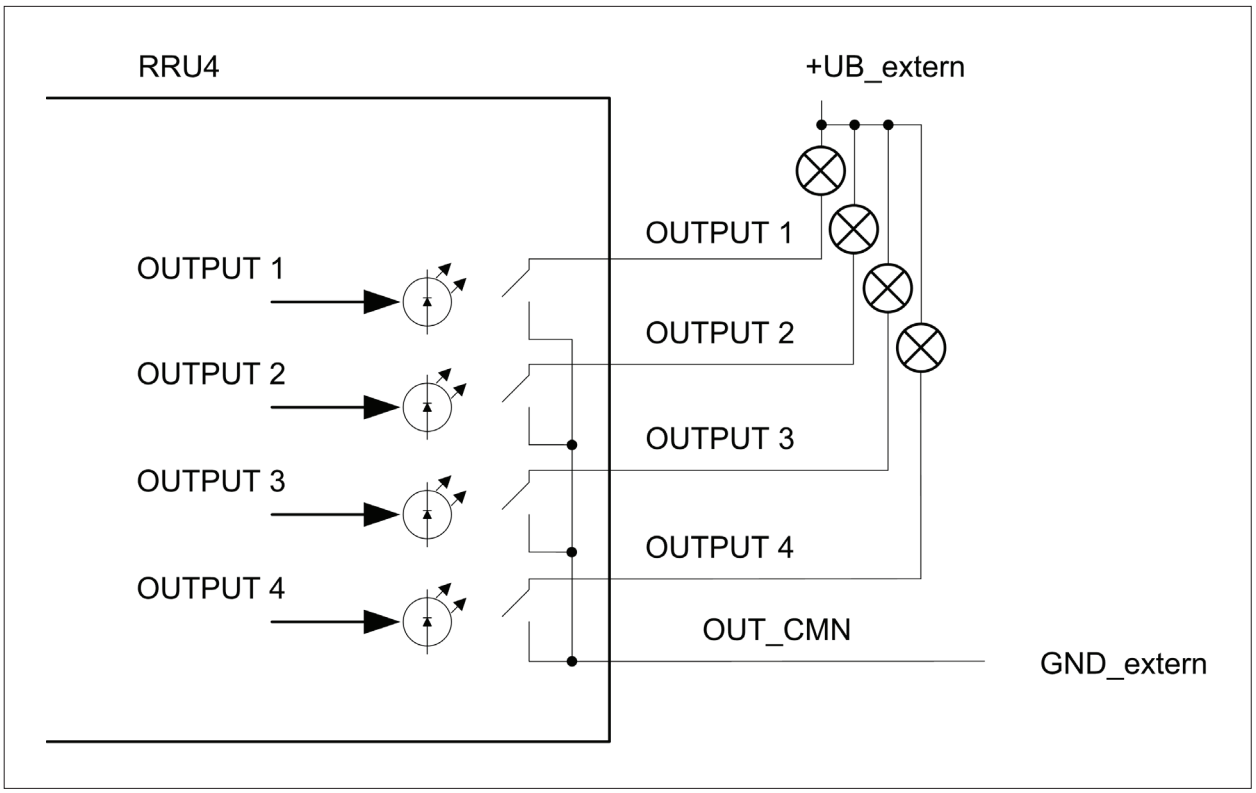

Figure: Outputs double insulated

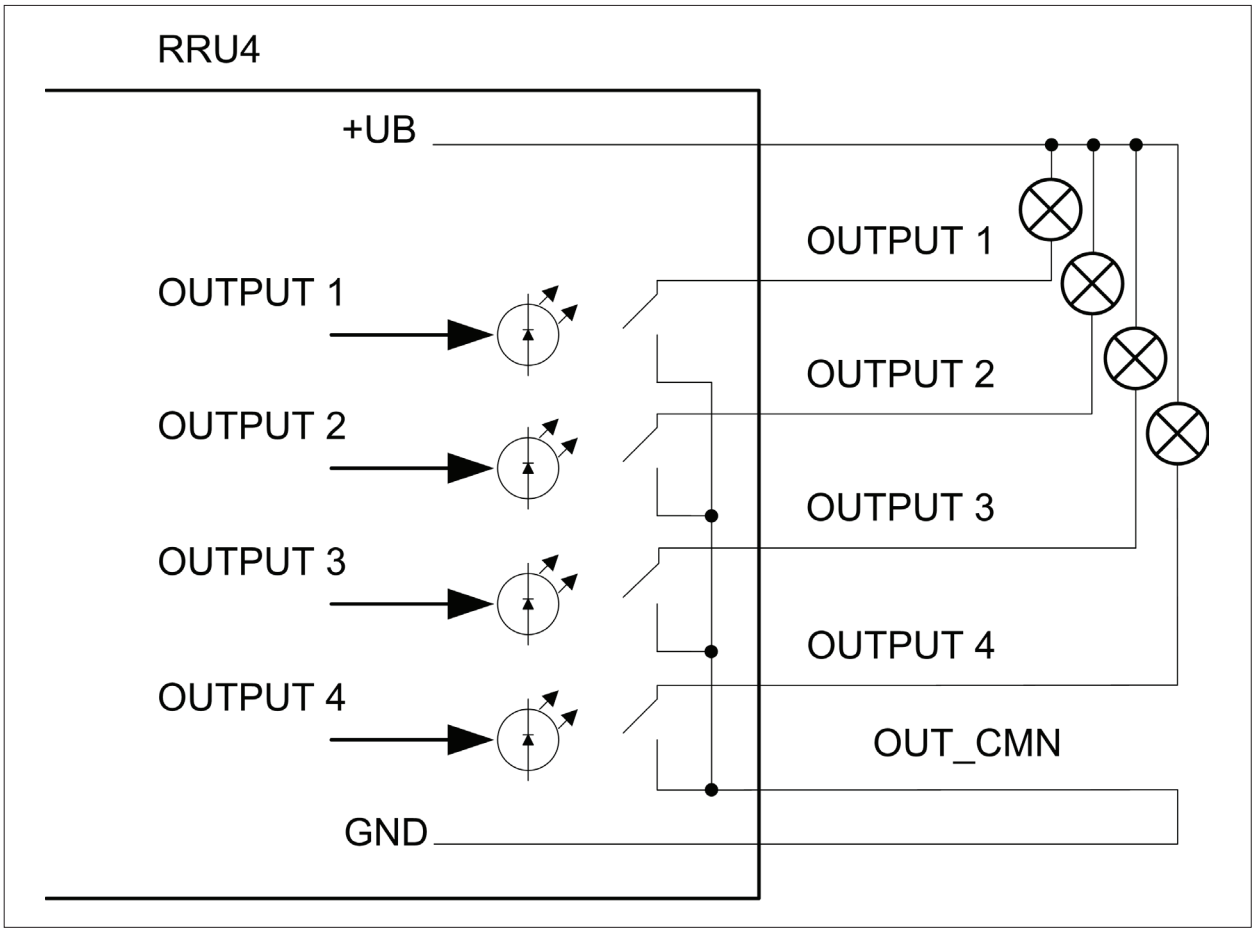

Figure: Outputs not double insulated

4.12. Antenna Connection

For the connection to the RFID antennas, the reader has four antenna connections that are of reverse TNC design. Please only use the cable from the accessories or equivalent cable for this connection.

Note

Please only use cable suitable for the impedance (50 Ohm), as otherwise the performance of the reader will be severely limited by the mismatch. If the mismatch is large, the reader may indicate a fault.

4.13. LED

The reader has a 2-colour LED for the indication of the operating state. The table below shows the colours used and the related operating state.

Red	Green	Operating state
X	flashes approx. every 8 seconds	Error during initialisation
X	X	Unit is booting
Flashes approx. every 8 seconds	X	Normal operation with heartbeat

Table: Indication of the operating states by the LED

The reader has also ARU4 the antenna dome 4 LEDs. (Red / green / red / green) that can be controlled via software

4.14. Buzzer

Furthermore the reader is also fitted with a buzzer which, in addition to the LED, indicates successful booting (1 x short) or an error (2 x long).

For test purposes the reader can be operated using the demo software supplied. This software provides all the necessary functionality of the reader for a test in a real environment. As an aid to configuration, various basic settings for application scenarios are provided.

The current version of the Reader Start can be found on our website under „Software & Downloads“.

As well as this documentation, the following documents and programs can be found on the CD supplied:

- data sheet for the reader
- specification of the protocol for communication by the reader with a receiver
- catalogue of the RFID products currently available
- API DLLs for the simplified activation of the reader with Borland and Visual Studio together with some simple programming examples
- set-up program for the Kathrein reader start demo
- .Net Framework 4
- C++ 2008 redistributable

5.1. System requirements

To ensure correct operation using the software on your PC/laptop, your PC/laptop should meet the following minimum requirements:

Processor:	X86 compatible
Memory:	512 MB RAM
Operating system:	Windows XP (SP3), Vista (SP1), Windows 7 or higher
free hard disk memory for:	
32-bit operating system	850 MB (including Microsoft .Net Framework 4)
64-bit operating system	2 GB (including Microsoft .Net Framework 4)

5.2. Installation

The demo software is installed by running *KathreinRFIDDemoSetup.exe* from the CD-ROM supplied. During the installation a check is made whether the necessary preconditions for the installation are satisfied. This means that a check is made whether all the dependencies such as the necessary Windows Service Packs, the .NET Framework in the respective version together with the C++ redistributables are installed. If this is the case, during this process the demo software and the DLL for controlling the reader are installed.

After the start of the set-up, you can change the language used during the installation in the window that now opens. Confirm your selection by clicking on the *OK* button.

Note

The presentation of the setup window depends on the operating system.
The following pictures show the state to install with software version 2.20. All subsequent versions are also installed. Please follow the instructions on the screen.

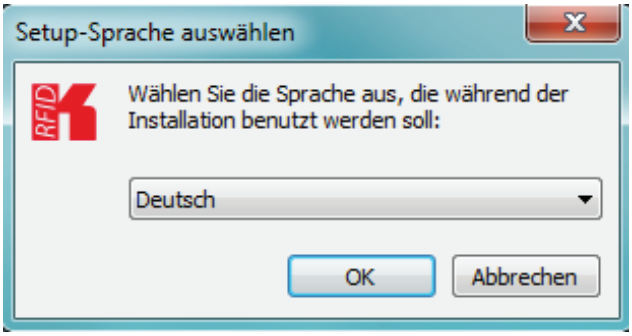

Figure: Installation Language

The splash screen is now appearing again information about the exact state of the versionReader Start software. This information can later be retrieved via the drop-down menu in the menu bar info.

Figure: Welcome screen with software version

Clicking on the *Next* button takes you to the license agreement. Please read this through carefully; if you do not accept the terms of the agreement you must decline to accept it. The installation is then terminated at this point.

Figure: Confirmation of the license agreement

If you have accepted the license agreement, press the *Next* button, following which you can select the target folder in which to install the software. Don't forget to select the target drive also.

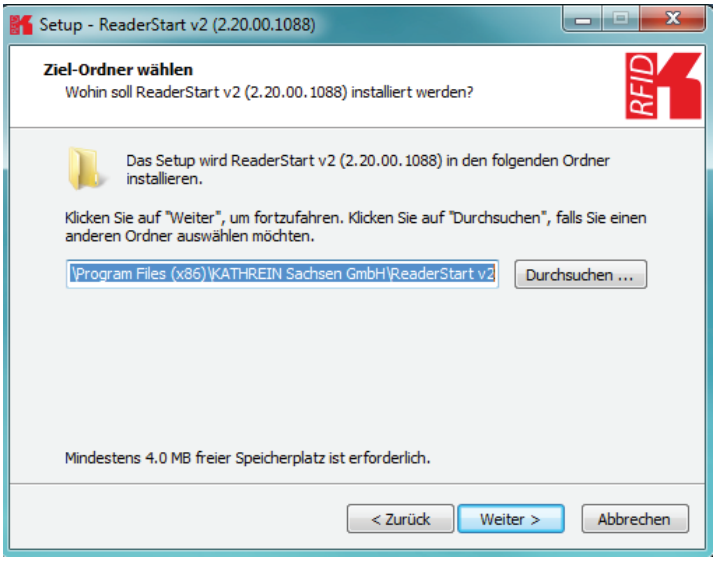

Figure: Selection of the installation folder

In the next screen you can customise the folder in the Windows start menu. Here, as in the previous windows, you are offered the standard settings.

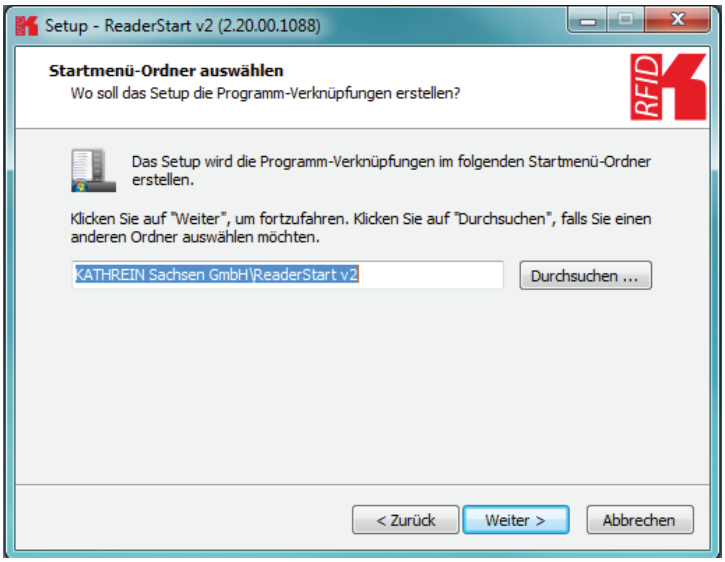

Figure: Selection of the folder in the start menu

In the following window you can specify whether you wish an icon to be included in the Windows Quick Launch and/or on the Desktop. The default is to generate no icons.

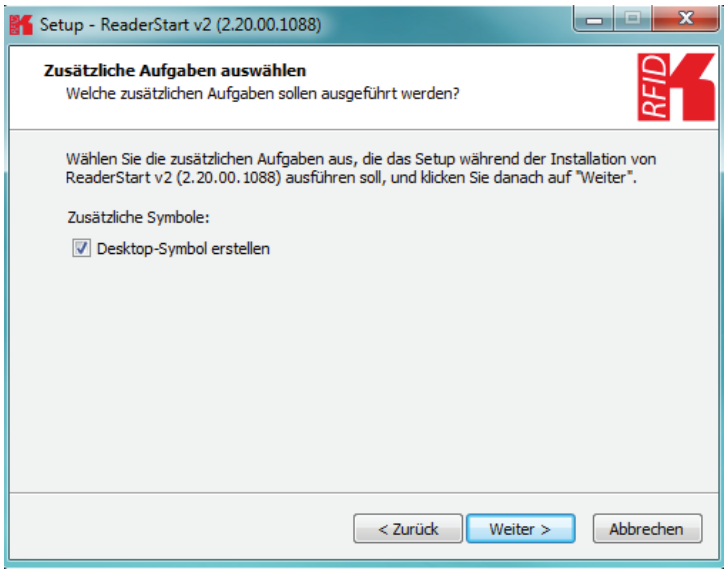

Figure: Selecting installation tasks

Finally a summary of all the installation tasks is shown. Click on the *Install* button to start the installation. If during the installation procedure a request is made to restart the computer, please do so.

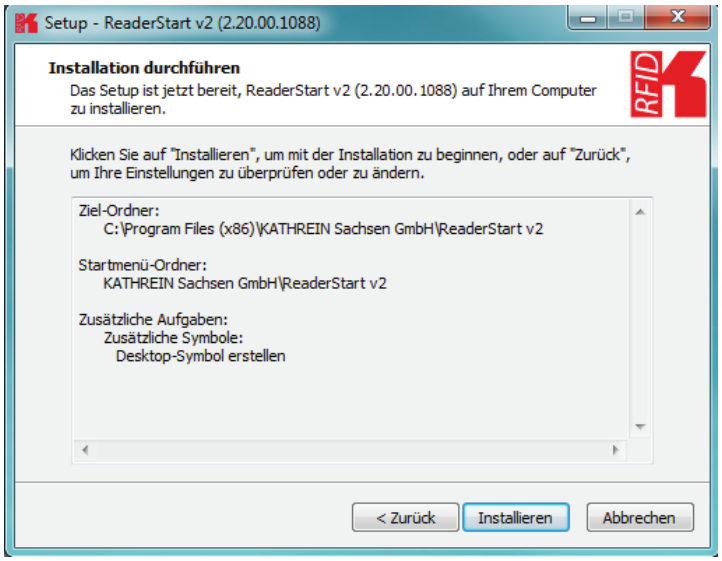

Figure: Summary of the installation tasks

Successful completion of the installation is shown in the following window. If you do not wish to start using the software straight away, please uncheck the *Launch ReaderStart v2*, box, otherwise the program will start immediately once you click on *Finish*

Figure: Completing the installation

5.3. Operation

In the following section, the Reader‘s launch software for the Kathrein RFID reader is described.

5.3.1. User interface for ReaderStart v2

The program is started by *ReaderStart v2.exe*. The splash screen is displayed until all the necessary DLLs have been loaded in the background. After this the user interface shown below appears. This consists essentially of the menu bar, the tabs together with the status field.

The insertion of of the tab („App Manager“) is then only when the reader hardware supports it.

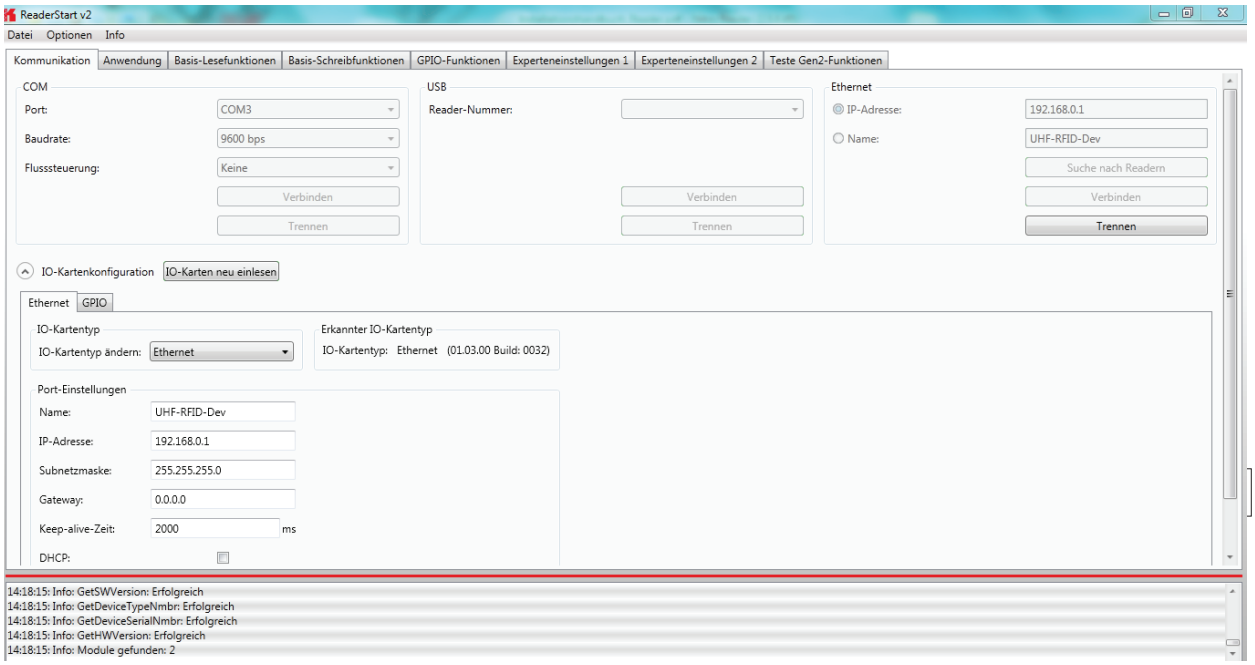

Note

Functions that are unavailable are greyed out in the program.

The settings and controls for the reader are divided into individual functional groups under different tabs. The individual sheets can be selected using the tabs. The sequence of the tabs can be changed as required by “drag and drop”.

All status messages from the reader and the program are shown in the status field, and if desired logged. 3 message types are defined:

- Info – shows which action was just performed
- Warning – indicates possible problems in the structure and configuration
- Error – indicates that the desired action could not be executed

Every message is provided with a time stamp which is placed in the status field which always lies above the information itself.

The status field has a context menu which allows deactivation of warnings, information and errors in the status field. Messages that have expired can be deleted in this menu.

5.3.3. Menu bar

The menu bar allows the program to be customised to your own requirements. These include for example: language settings, layout, status messages and calling up the program information. It consists of the items: file, options and info.

5.3.3.1. File

There are a wide variety of parameters available for configuring the RF front end. A complete setting can be saved as a parameter set in the menu item file as an XML file, and later reloaded.

Under the item *Save Reader Configuration to File*, a dialogue opens which displays all the available parameter sets (0 - 7). The selection can be changed by setting the check. Furthermore each parameter set can be described briefly. Selecting *Save* opens a further dialogue in which a respective save location and a file name must be selected or input, in order to successfully save the file. The progress of the save operation is shown by a progress bar.

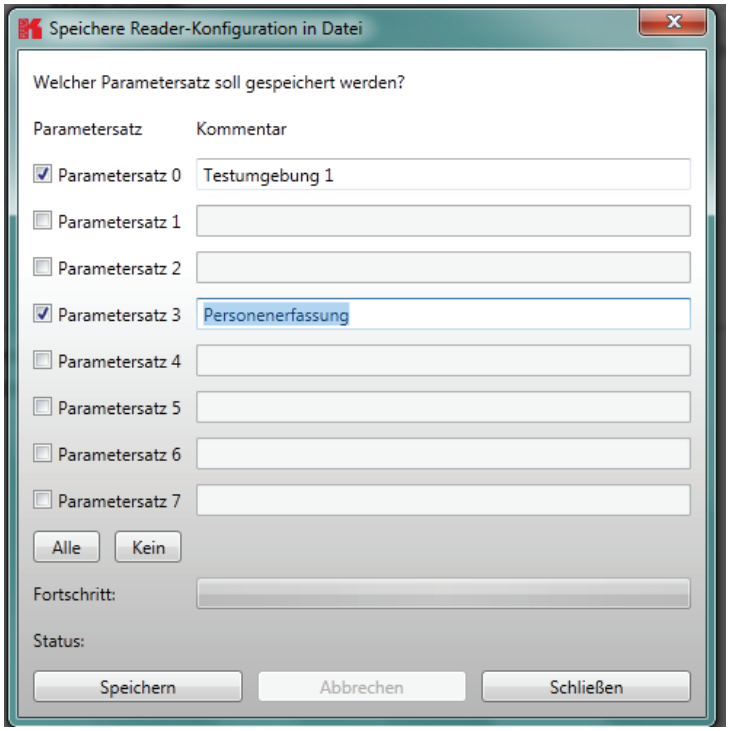

Figure: Saving the configuration in a file

Reloading the settings starts with the selection of the parameter file. In the dialogue which opens, all available parameter sets are displayed. The assignment of them to the individual save locations can be reassigned here. For this purpose the desired parameter set on the reader can be selected in the drop-down menu. Selection of the item *None* means this parameter set is not loaded into the reader. In the default setting a 1:1 assignment applies. Pressing the A*ssign parameter sets 1:1* button resets all the changes in the assignment to the default. Pressing the *Delete assignment* button deletes all assignments of the saved parameter sets to those in the reader. In the drop-down menu this is indicated by *None*.

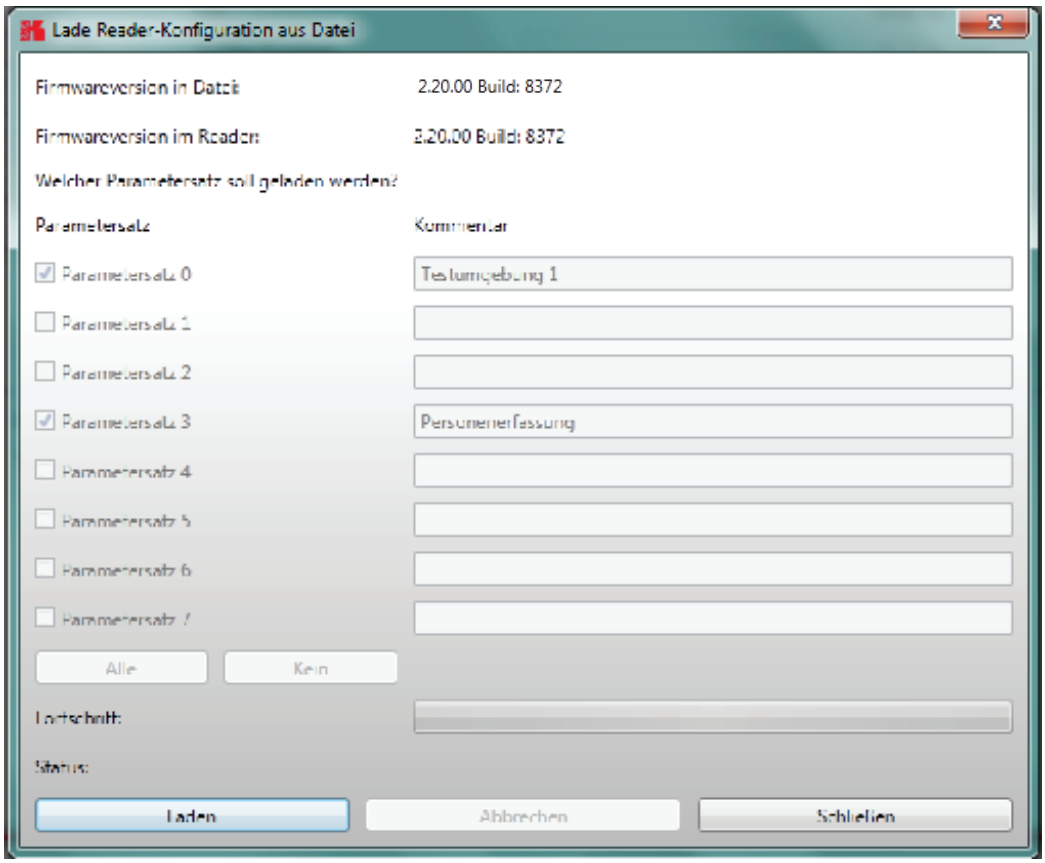

Figure: Loading a configuration from the file

5.3.2.2. Options

The *Options* are divided into two groups. One part offers the facility to change or reset some properties of the program. The second part permits the reader to be provided with new firmware and to change its system time.

The first group includes changing the language, selection of the warnings that are displayed, resetting the layout and deletion of the status messages in the status field. The language used in the program set to the desired language by clicking on Language Selection in the menu item. The currently selected language is shown by a check; if a computer restart is necessary in order to load the change, the program will indicate this.

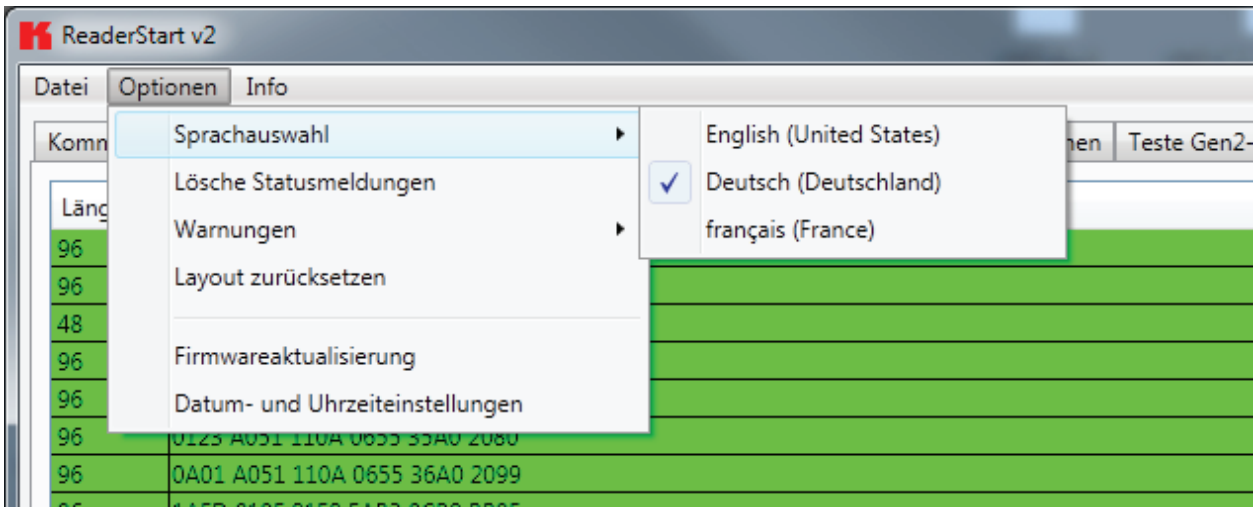

Figure: Changing the language

Under the item *Warnungen* (Warnings), the confirmation queries for the actions Describe, Block or Deactivate the tags in the field are activated or deactivated.

Note

Changing the memory content of the tags can render them unusable.

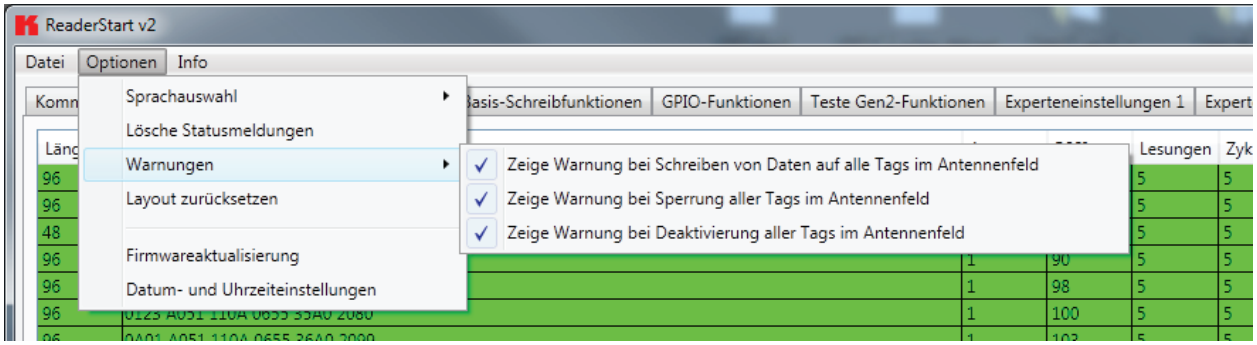

Figure: Setting the warnings

If it is desired to recreate the original layout of the program in respect of window size and sequence of tabs, this can be achieved by means of the *Reset layout* menu item.

The Firmware Update item permits the update of the reader firmware. The window that opens shows the version currently mounted in the reader. After selection of a firmware file, this version is shown in the next line. Pressing the *Update* button starts the procedure. The progress is shown in the *Update progress* line in a bar. After a successful update the reader must be restarted, either by pressing the *Restart* button or by switching the power supply off and on again.

Figure: Updating the firmware

The reader has an integral clock, which can deliver the time stamp for a tag operation. This clock is set using the *Date and time settings* in the menu. When this menu item is opened, it automatically reads the current date and time from the reader and compares this with the date and time from the host computer. The date and time of the host computer can now be loaded to the reader by pressing the *Set system date and time on Reader* button. There is also the facility to set the reader date and time manually and load it to the reader. This is done by entering the desired date and time on the reader side and pressing the *Set adjusted system date and time on Reader* button. The status line indicates which action was just executed and whether the action was successful.

Figure: Setting the date and time

5.3.2.3. Info

This item on the menu bar allows information about the reader start software and the reader to be interrogated. The version issue of the PC software can be interrogated under the first item.

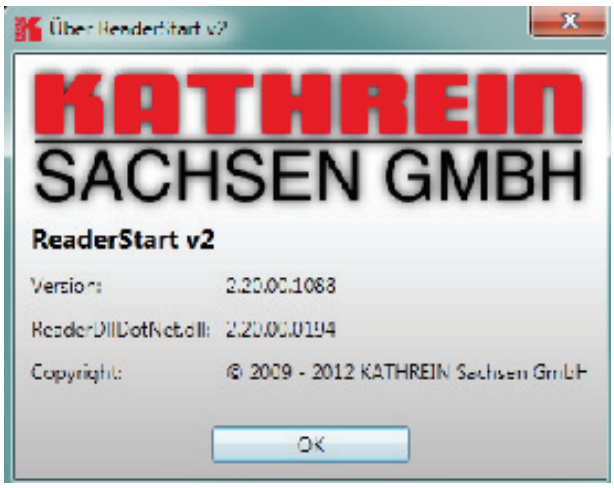

Figure: About reader start v2

The second item automatically reads the license key. The key plays back various factory-set parameters of the reader. In certain cases it may be necessary to send this key to Kathrein (rfid@kathrein.de). The window that opens allows the key to be copied to the clipboard.

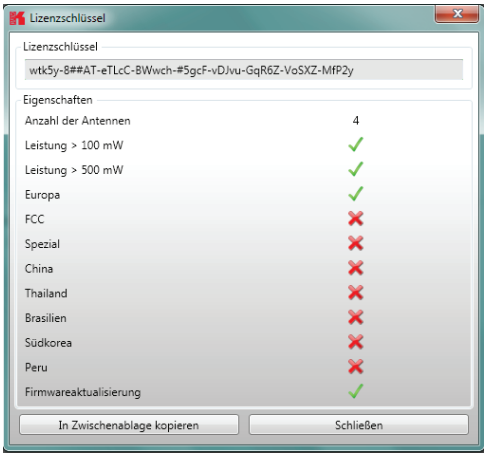

Figure: Displaying the license key

The third item supplies detailed information about the software and hardware versions of the reader. The firmware is specified with version number and build number. The hardware issue is divided into CPU module, PA module and the various I/O modules. The information about the I/O modules are stated in the format *Insert position : module type* .

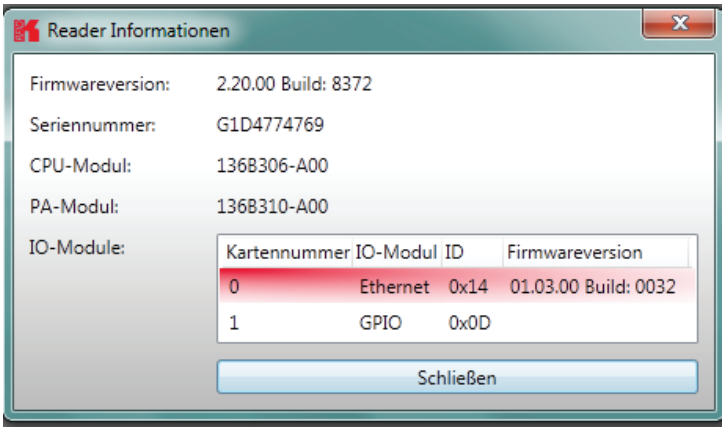

Figure: Interrogating information about the reader

The Error status item reads the error status of the reader and shows all errors that are still outstanding in the status field.