User Guide

ARU 2400
ARU 3500
ARU 8500
RRU 1400
RRU 4500
RRU 4560
RRU 4570
English

IMPORTANT
Read carefully before use!

Kathrein RFID UHF Readers

Quality made in Germany

KATHREIN

Copyright © 2021 KATHREIN Solutions GmbH

All rights reserved. No part of this document may be reproduced, distributed, stored in a retrieval system, translated into any language or computer language or transmitted in any form or by any means, electronic, mechanical, photocopying, recording or otherwise, without the prior written permission of KATHREIN Solutions GmbH.

KATHREIN Solutions GmbH accepts no liability for omissions or inaccuracies in this document or in relation to the provision or use of the information contained in this document. KATHREIN Solutions GmbH reserves the right to change the products described in this document at any time without notice and does not accept any liability in relation to the application or usage of the products described in this manual. The latest version of this manual is available at our website www.kathrein-solutions.com.

Information provided in this manual is intended to be accurate and reliable. However, KATHREIN Solutions GmbH assumes no responsibility for its use; nor for any infringements of rights of third parties which may result from its use.

This document and the information contained in it are proprietary information of KATHREIN Solutions GmbH and must be treated as confidential. KATHREIN Solutions GmbH provides this document to its customers in connection with contacts of sale for the products described therein. If the person in possession of this document, being a legal or natural person, is not a contractual sales partner of KATHREIN Solutions GmbH, or KATHREIN Solutions GmbH has not intended him by other means as the recipient of the document and the information contained therein, the person in possession is hereby informed that the use of this document is unlawful and a violation of the rights of KATHREIN Solutions GmbH.

Contents

1 Preface 6
2 About This Guide 6
3 Devices 6
4 Explanation of Symbols and Signal Words 7
4.1 Symbols 7
4.2 Signal Words 7
4.3 Other Symbols 7
5 Professional Installation Guidelines for the U.S. 8
5.1 Installation Personnel 8
5.2 External Antenna 8
5.3 Final Output Power 8
6 Safety Instructions 9
6.1 General Safety Instructions 9
6.2 CE Marking for the Kathrein RFID Readers with the Type Designation ETSI 10
6.3 FCC and ISED Canada Regulatory Information 10
6.3.1 Radiation Exposure Statements 11
6.3.2 Safety Instructions 12
6.3.3 Recommended Antenna Types 13
6.4 Anatel Brazil Regulatory Information 14
6.5 Singapore Regulatory Information 14
7 Warranty Information 14
8 Introduction to the RIFD System 15
8.1 RFID System 15
8.2 Kathrein RFID Antenna Interface ©KRAI 16
8.2.1 WIRA 70 ©KRAI Polarisation Switch Antenna (PLS) 16
8.2.2 Kathrein RFID Reader with Circular Switch-Beam Antenna 17
8.2.3 ©KRAI SMSH (Smart Shelf) Antenna 18
8.3 Further Reference Material 19
9 The Reader 20
9.1 Functional Specification 20
9.2 Features 20
9.3 Scope of Delivery 20
9.4 Accessories 21
9.4.1 Antennas 21
9.4.2 Antenna Cables 22
9.4.3 Antenna Adapters 22
9.4.4 Antenna Mounting Accessories 21
9.4.5 Antenna Protective Cover 22
9.4.6 Reader Connecting Cables 22
9.4.7 Reader AC/DC Adapters 22
9.4.8 PoE+ Power Supply Unit 23
9.4.9 Reader and Antenna Wall/Pole Mounting Kit 23
9.4.10 Reader Protective Covers and Caps 23
9.4.11 Connection Boxes 23
10 Connections and Displays 24
10.1 RRU 1400 24
10.1.1 Front View 24
10.1.2 Rear View 25
10.2 RRU 4xxx and ARU 3xxx 28
10.2.1 Front View 28
10.2.2 Rear View 29

10.3 ARU 2400 **32**
10.3.1 Front View 32
10.3.2 Rear View 33
10.4 ARU 8500 **36**
10.4.1 Front View 36
10.4.2 Rear View 37
11 Installing the Reader 36
11.1 Selecting the Installation Site **36**
11.2 Installing the RRU 1400 **40**
11.2.1 Wall Mounting 40
11.2.2 Wall/Pole Mounting 41
11.3 Installing the RRU 4xxx and ARU 3xxx Readers **42**
11.3.1 Wall Mounting 42
11.3.2 Wall/Pole Mounting 43
11.4 Installing the ARU 2400 Reader **44**
11.4.1 Wall Mounting 44
11.4.2 Shelf Mounting 45
12 Inserting a SIM Card into the ARU 3570 Reader 46
13 Transmission Methods 47
13.1 UART transmission (RS232, RS422, RS485 or similar) **47**
13.1.1 Physical Layer 47
13.1.2 Data Link Layer 47
13.2 LLRP Protocol **48**
13.3 Ethernet Transmission **49**
13.3.1 Ethernet Transmission Generation 2 Readers 49
13.3.2 Ethernet Transmission Generation 3 Readers 50
14 Connecting the Reader 51
14.1 Connecting Digital Inputs and Outputs of the RRU 4xxx, ARU 3xxx and ARU 8500 Readers Directly **51**
14.2 Connecting Digital Inputs and Outputs of the RRU 1400 and ARU 2400 Reader Directly **54**
14.3 Connecting Digital Inputs and Outputs of the RRU 4xxx, ARU 3xxx, ARU 2400 and ARU 8500 Readers via the Connection Box **55**
14.3.1 Safety Instructions 55
14.3.2 Digital Inputs and Outputs 56
14.3.3 Connecting the Reader to the Power Supply 59
14.4 Connecting the Antenna **60**
14.5 Turning the Reader On and Off **60**
14.6 Reading the PWR LED Indications **60**
15 Operating ***ReaderStart*** Software 61
15.1 System Requirements **61**
15.2 Installing the Software **61**
15.3 Connecting the Reader in the *ReaderStart* Software **64**
15.3.1 Requirements 64
15.4 Navigating in the *ReaderStart* User Interface **67**
15.4.1 Menu Bar 67
15.4.2 Status Field 81
16 Operating the Reader Using the ***ReaderStart*** Software 82
16.1 Communication **82**
16.1.1 Ethernet Section 82
16.1.2 Communication Configuration Linux Module 85
16.2 Application **94**
16.2.1 Available Applications 96
16.3 Basic Reading **97**
16.3.1 Mode 98

16.3.2 Starting and Stopping the Reading 98
16.3.3 Statistics 99
16.3.4 Options 100
16.3.5 Grouping 101
16.3.6 Expert settings 101
16.3.7 ARU-CSB-ELC Antenna Reader Unit 102
16.4 LED 103
16.4.1 Selecting Functions 104
16.5 RSSI LED Bar (received signal strength indicator) 103
16.6 GPIO Functions 106
16.6.1 IO Configuration 106
16.6.2 Test Input and Output 107
16.6.3 Action List and Assign Input to Action List 108
16.7 Expert Settings 1 110
16.7.1 Port Power 112
16.8 Expert Settings 2 113
16.8.1 Default Parameter Set 113
16.8.2 Copy Parameter Set 113
16.8.3 Change Reader Parameter 114
16.8.4 Select Filter Settings 114
16.8.5 Applying a Select Filter (Example) 115
16.9 Test Gen 2 Functions 116
16.9.1 Get All Tags 116
16.9.2 Password for Operation 117
16.9.3 Write EPC 117
16.9.4 Read Data 118
16.9.5 Write Data 119
16.9.6 Change Password 120
16.9.7 Lock 121
16.9.8 Kill 122
16.10 @KRAI 123
16.10.1 Polarisation 124
16.10.2 LED 124
16.10.3 Jumper Cable Attenuation 125
16.10.4 Direction 125
16.11 AppManager 126
16.11.1 Currently Available Apps 126
16.11.2 Installing an App 127
16.11.3 Activating an App License Key 128
16.12 TagScan 136
16.13 Spectral Scan 137
16.14 Authentication 138
16.14.1 Key 138
16.14.2 Functions 140
16.15 High Security Module (HSM) 143
16.15.1 Encrypt/Decrypt 143
16.15.2 Random Data 144
16.15.3 AES Key Management 144
16.15.4 Wrapping Key Management 144
16.15.5 Certificate Management 145
17 Contact Information 145
18 Waste Disposal 146

1 Preface

Dear customer,

Please follow all the information given in this guide. KATHREIN Solutions GmbH has made every effort to ensure the information and descriptions are correct and complete.

We reserve the right to make changes to this guide without prior notice. In particular, this applies to changes made due to technical advancements.

2 About This Guide

This document describes installation, configuration and operation of the reader. Furthermore, it provides detailed technical data in order to better familiarise the user with the features of the reader.

The target group of this guide is specialist personal who install, configure and put the reader into operation.

This document is valid for all Generation 3 Kathrein RFID readers.

Tip This document applies to all Generation 3 Kathrein RFID readers. Even if it's referred to in the text as RRU 4xxx, it is possible to control all other readers of the RRU 4xxx, ARU 3xxx, ARU 2xxx series and ARU 8500 using the same commands.

Tip Keep these instructions for further reference, and if the device passes to another owner, pass them on to the new owner.

► For more information, visit our website www.kathrein-solutions.com.

⇨The manuals are available for download at the internet product page.

3 Devices

This guide applies to the following readers:

Type	Order Number ETSI/FCC
RRU 1400	52010551/52010552
RRU 4400*	52010287/52010295
RRU 4500	52010288/52010296
RRU 4560	52010289/52010297
RRU 4570	52010290/52010298
ARU 2400	52010348/52010349
ARU 3400*	52010291/52010299
ARU 3500	52010292/52010300
ARU 3560*	52010293/52010301
ARU 3670*	52010294/52010302
ARU 8500	52010340

*) Product no longer avaibale

4 Explanation of Symbols and Signal Words

4.1 Symbols

	General warning sign
	Fire hazard
	Radiation hazard
!	Risk of material damage or malfunction in safety instructions or call for attention

4.2 Signal Words

Warning	This signal word indicates a hazard with a medium level of risk which can lead to death or severe injuries.
Caution	This signal word indicates a hazard with a low level of risk which can lead to minor or moderate injuries.
Notice	This signal word indicates a hazard which can lead to damage to property or malfunction.
Tip	This signal word indicates useful tips and recommendations.

4.3 Other Symbols

Symbol	Meaning
▶	Operating instruction
1, 2, 3...n	Operating instructions in a fixed order
⇨	Result of an operating instruction
✓	Condition for the execution of an operating instruction
●	List/list entry
Program	connections on the reader; push buttons in the user interface of the *ReaderStart*
dbfdfbdfb	commands and file names
Putty	cross references within the text, proper names or titles of other documents
www.putty.org	hyperlinks
Browse	homepage/Windows elements

5 Professional Installation Guidelines for the U.S.

5.1 Installation Personnel

UHF RFID readers require professional installation!

- ► You must be a professional installer with RF and related rule knowledge.
- ► The installation requires special trained professionals to access and setup the system.
- ► The system is not to be installed by the general public, general user shall not attempt to install the device or change the settings.

5.2 External Antenna

- ► You must follow Part 15 of the FCC rules, and specifically Part 15.203 pertaining antenna requirements of an intentional radiator.
- ► Make sure to use a 13 dBi or less patch antenna.
- ► Only use antennas which have been approved by the applicant. The use of none-approved antenna(s) may produce unwanted spurious emissions or excessive RF transmitting power which may lead to the violation of the FCC/ISED limit and is prohibited.

5.3 Final Output Power

WARNING

- ► Carefully select the installation position.
- ► Make sure that the final output power does not exceed the limit set in relevant rules. The violation of the rule could lead to serious federal penalty!

If you are not a professional installer, **STOP**.

- ► Do not proceed any further with the installation.
- ► Do not install the unit or change the settings.

6 Safety Instructions

6.1 General Safety Instructions

WARNING

Danger to life from electric shock! Fire hazard!

Improper interventions in the device may jeopardise its electrical safety. Unauthorized changes to the unit and the use of spare parts and peripheral devices which are not sold or recommended by the manufacturer can result in fire, electric shock and injuries.

The manufacturer accepts no liability for accidents caused by the user opening or changing the device. Opening the device and attempting to repair it yourself voids all warranty and guarantee claims. The applicable version of the manufacturer's guarantee is that which was valid at the time of purchase. We accept no liability for unsuitable manual or automatic adjustments made to the unit's parameters and inappropriate use of the unit.

- ► Make sure that all the connection, installation and maintenance work as well as all other work on the unit is carried out by properly qualified and trained staff.
- ► Make sure that the installation team is properly qualified, familiar with and comply with the safety regulations applicable in the respective country.
- ► Do not open, change or damage the device and its components.
- ► Make sure that any repairs on the device are carried out by personnel authorised to perform them.
- ► Keep and operate the device out of reach of children.
- ► Do not modify, remove or disfigure the notices and markings applied by the manufacturer.
- ► Only use the unit for the purpose intended by the manufacturer.
- ► Before each use, make sure that the device is not damaged.
- ► Only use the power supply unit supplied.
- ► Make sure that the power supply cable is not damaged.
- ► Make sure that a unit with a damaged power supply cable is repaired by an electrical specialist before being used again.

WARNING

Danger to life from electric shock or fire hazard due to incorrect voltage, insufficient ventilation, moisture, direct sunlight, heat or naked flames!

If the supply voltage is too high, there is a risk of fire.

- ► Make sure the unit is operated only at the stated supply voltage; see the rear of the device or the external power supply unit.
- ► When installing the unit in cabinets or shelves, make sure there is sufficient ventilation.
- ► Do not cover the ventilation slots on the unit.
- ► Protect the unit from moisture, dripping and splash water.
- ► Do not operate the unit in damp areas.
- ► Only use the unit in a moderate climate, not in tropical conditions.
- ► Do not place any liquid-filled items on top of the unit.
- ► Do not expose the unit to inadmissible heat, direct sunlight or fire.
- ► Do not install the device close to the sources of heat, e.g. heating.
- ► Do not place anything with a naked flame on the device.

NOTICE

Risk of malfunction!

- ► Make sure the reader is properly grounded according to the corresponding national standards.
- ► Make sure that the diameter of the ground cable is min. 6 mm^2 (typ. 10 mm^2).
- ► Make sure to ground the reader such that the distance between the reader ground point and the ground point in the building is as short as possible.
- ► Note that the equipotential bonding does not replace lighting protection.

6.2 CE Marking for the Kathrein RFID Readers with the Type Designation ETSI

WARNING

Danger to life due to radiation electromagnetic field!

This reader is designed ETSI for operation according to EN 302208. In some circumstances, heart pacemakers may suffer interference if wearers are close to the antenna when the unit is in operation (reader and antenna).

- ► When the unit is operated with antennas connected, comply with the human exposure regulations in accordance with EN 50364.
- ► Ensure a minimum clearance of 35 cm between the antenna and the human body.
- ► Comply with the operating instructions for RFID antennas.
- ► In case of doubt, make sure people with peacemakers contact the manufacturer of their peacemaker or their doctor.

6.3 FCC and ISED Canada Regulatory Information

The operator and the specialist company which carries out the installation are responsible for ensuring that only certified systems are used in the United States. Use of this system in any other combination (e.g. several antennas which transmit the same information in the same location) is expressly prohibited. Changes or modifications not expressly approved by the party responsible for compliance could void the user's authority to operate the equipment.

To meet the certification regulations according to Part 15 of the FCC regulations in the United States:

- ► Make sure the operation is subject to the following two conditions: (1) this device may not cause harmful interference, and (2) this device must accept any interference received, including interference that may cause undesired operation.
- ► Make sure the unit is properly installed, see *FCC RF Radiation Exposure Statement, p. 11* and *ISED RF Radiation Exposure Statement, p. 11*.

The readers with the grantee code WJ9 are designed to operate under FCC Part 15 and can be found at the FCC homepage. This device complies with Part 15 of the FCC Rules and with ISED license-exempt RSS standard(s).

This device contains licence-exempt transmitter(s)/receiver(s) that comply with Innovation, Science and Economic Development Canada's licence-exempt RSS(s). Operation is subject to the following two conditions:

(1) This device may not cause interference;

(2) This device must accept any interference, including interference that may cause undesired operation of the device.

ISDE

Cet appareil contient des émetteurs / récepteurs exemptés de licence conformes aux RSS (RSS) d'Innovation, Sciences et Développement économique Canada. Le fonctionnement est soumis aux deux conditions suivantes:

(1) Cet appareil ne doit pas causer d'interférences;

(2) Cet appareil doit accepter toutes les interférences, y compris celles susceptibles de provoquer un fonctionnement indésirable de l'appareil.

Under ISED regulations, this radio transmitter may only operate using an antenna of a type and maximum (or lesser) gain approved for the transmitter by ISED.

- ► To reduce potential radio interference to other users, choose the antenna type and its gain such that the equivalent isotropically radiated power (EIRP) is not more than that necessary for successful communication.

En vertu des réglementations d'ISDE, cet émetteur radio ne peut être utilisé qu'avec une antenne de type et un gain maximum (ou inférieur) approuvé pour l'émetteur par ISDE.

- ► Pour réduire les interférences radio potentielles avec d'autres utilisateurs, choisissez le type d'antenne et le gain de sorte que la puissance isotrope rayonnée équivalente (PIRE) ne soit pas supérieure à celle nécessaire pour une communication réussie.

This radio transmitter has been approved by ISED to operate with the antenna types listed in *Recommended Antenna Types, p. 14* with the maximum permissible gain and required antenna impedance for each antenna type indicated.

Cet émetteur radio a été approuvé par ISDE pour être utilisé avec les types d'antennes énumérés dans *Recommended Antenna Types, p. 14* avec le gain maximum admissible et l'impédance d'antenne requise pour chaque type d'antenne indiqué.

Modifications or conversions which are carried out on this unit without the express permission of Kathrein may invalidate the FCC permit for the operation of this unit.

6.3.1 Radiation Exposure Statements

WARNING

Danger to life due to radiation electromagnetic field!

- ► As a result of the RF exposure information given in the *FCC RF Radiation Exposure Statement, p. 11 and ISED RF Radiation Exposure Statement, p. 11*. Ensure a minimum clearance of 35 cm between the antenna and the human body.
- ► Comply with the operating instructions for RFID antennas.
- ► In case of doubt, make sure people with peacemakers contact the manufacturer of their peacemaker or their doctor.

FCC RF Radiation Exposure Statement

This transmitter must not be co-location or operating in conjunction with any other antenna or transmitter.

This equipment complies with FCC RF radiation exposure limits set forth for an uncontrolled environment.

- ► Make sure this equipment is installed and operated with a minimum distance of 23 centimetres between the radiator and your body.
- ► Due to the fact that the ARU 3560 contains a WLAN module, make sure to keep the minimum distance of 24 centimetres between the radiator and your body.
- ► Due to the fact that the ARU 3570 contains a cellular module, make sure to keep the minimum distance of 37 centimentres between the radiator and your body.

ISED RF Radiation Exposure Statement

This equipment complies with ISED RSS-102 radiation exposure limits set forth for an uncontrolled environment.

- ► Make sure this equipment is installed and operated with a minimum distance of 34 centimetres between the radiator and your body.
- ► Due to the fact that the ARU 3560 contains a WLAN module, make sure to keep the minimum distance of 35 centimetres between the radiator and your body.
- ► Due to the fact that the ARU 3570 contains a cellular module, make sure to keep the minimum distance of 54 centimentres between the radiator and your body.

ISDE Déclaration d'exposition aux radiofréquences

Le présent appareil est conforme aux limites d'exposition aux radiofréquences d'ISDE CNR-102 définies pour un environnement non contrôlé.

- ► Assurez-vous que cet équipement est installé et utilisé avec une distance minimale de 34 centimètres entre le radiateur et votre corps.
- ► Comme l'ARU 3560 contient un module WLAN, assurez-vous que cet équipement est utilisé avec une distance minimale de 35 centimètres entre le radiateur et votre corps.
- ► Comme l'ARU 3570 contient un module cellulaire, assurez-vous que cet équipement est utilisé avec une distance minimale de 54 centimètres entre le radiateur et votre corps.

6.3.2 Safety Instructions

NOTICE

Risk of harmful radio communication interference!

Following corresponding tests, it has been ascertained that this unit adheres to the limit values for class B digital units in accordance with Part 15 of the FCC regulations. These limit values are intended to provide private user's systems with appropriate protection against harmful radio interference. This unit generates and uses energy in the radio frequency range and is also able to radiate this; if it is not installed and used in accordance with the regulations, the unit may cause harmful radio communication interference. However, there is no guarantee that interference will not occur in a specific system. If this unit causes harmful radio or television reception interference, which can be ascertained by switching the unit on and off, we recommend that the user attempts to rectify this interference via one or more of the following measures.

- ► Turn the unit on and off to make sure the radio or television reception interference is caused by the unit.
- ► Realign the receive antenna or change its position.
- ► Increase the distance between the unit and the receiver.
- ► Plug the unit into a socket in a current circuit other than that to which the receiver is connected.
- ► Seek advice from the retailer or an experienced radio/television technician.

6.3.3 Recommended Antenna Types

Antenna types not included in this list or having a gain greater than the maximum gain indicated for that type are strictly prohibited for use with this device.

Les types d'antennes non inclus dans cette liste ou avec un gain supérieur au gain maximum indiqué pour ce type sont strictement interdits pour l'utilisation avec cet appareil.

Order number	Type	Shortened designation	Gain	
			circular	linear
52010087	WIRA-30-circular-FCC	wide-range 30° antenna FCC, 902–928 MHz, 30° circular	11 dBiC	8 dBi
52010584	WRA 3070 Antenna Unit	wide-range 30° CSB KRAI antenna FCC, 902–928 MHz, 30° circular	11.5 dBiC	8.5dBi
52010228	WIRA-30-CSB-KRAI-FCC	wide-range 30° CSB KRAI antenna FCC, 902–928 MHz, 30° circular	6 dBiC	3 dBi
52010249	WIRA-30-linear-FCC	wide-range 30° antenna FCC, 902–928 MHz, 30° linear	n.a.	11 dBi
52010252	WIRA-40-linear-FCC	wide-range 40° antenna FCC, 902–928 MHz, 40° linear	n.a.	13 dBi
52010079	WIRA-70-circular-FCC	wide-range 70° antenna FCC, 902–928 MHz, 70° circular	8.3 dBiC	5.3 dBi
52010194	WIRA-70-KRAI-FCC	wide-range 70° KRAI antenna FCC, 902–928 MHz, 70° circular	7/7/n.a./n.a.	4.5/4.5/ 7.5/7.5
52010083	MIRA-100-circular-FCC	mid-range antenna FCC, 902–928 MHz, 100° circular	2.5 dBiC	–0.5 dBi
52010172	S-MIRA-100-circular-ETSI-FCC	short m id-range antenna ETSI/FCC, 865–928 MHz, 100° circular	–10 dBiC	–13 dBi
52010085	LORA-FCC	low-range antenna FCC, 902–928 MHz	n.a.	–15 dBi
52010092	U-LORA-ETSI-FCC	ultra low-range antenna FCC, 865–928 MHz	n.a.	–30 dBi
52010219	SMSH-30-30-ETSI-FCC antenna modul	SMSH antenna/-module, 865–928 MHz, circular	–7 dBiC	–10 dBi
52010258	SMSH-30-30-KRAI-ETSI-FCC antenna	SMSH KRAI antenna/-module, 865–928 MHz, circular	–7 dBiC	–10 dBi
52010318	SMSH-HighGain-30-30-KRAI-FCC	SMSH antenna/-module, 902–928 MHz, circular	5 dBiC	2 dBi
52010319	SMSH-HighGain-30-30-FCC	SMSH antenna/-module, 902–928 MHz, circular	5 dBiC	2 dBi
52010525	SMSH Antenna FCC	SMSH antenna/-module, 902–928 MHz, circular	5 dBiC	2 dBi
52010526	SMSH KRAI Antenna FCC	SMSH KRAI antenna FCC 902–928 MHz, circular	4.5 dBiC	1.5 dBi

52010334	WRA 7070 antenna unit	wide-range antenna, 902–928 MHz, circular	8.5 dBiC	5.5 dBi
52010336	WRA 7070 KRAI antenna unit	wide-range antenna, 902–928 MHz, circular/linear	6.5 dBiC	7.0 dBi
52010424	WRA 6060	wide-range antenna FCC, 902–928, circular	5.5 dBiC	2.5 dBi

6.4 Anatel Brazil Regulatory Information

Anatel RF Exposure Statement

This device complies with the RF exposure guidelines when positioned at least 34 cm away from the body. For more information, see the website of ANATEL at www.anatel.gov.br.

Anatel Declaração de exposição à radiofrequência

Este dispositivo está em conformidade com as diretrizes de exposição à radiofrequência quando posicionado a pelo menos 34 centímetros de distância do corpo. Para maiores informações, consulte o site da Anatel – www.anatel.gov.br.

Declaration about the Frequency Range

For the Brazil market, the product will be provided with the frequency range 915 to 928 MHz.

Declaração sobre a Configuraçao de Frequência

Para o Mercado Brasileiro o produto será fornecido com a configuração de frequência 915 a 928 MHz.

6.5 Singapore Regulatory Information

Please be aware that the user needs to apply for an IMDA operating license for RFID readers operating at 920–925 MHz needed for applications in which power between 500 mW and 2 Werp is necessary.

7 Warranty Information

Switching on the AC or DC power supply prior to connecting the LAN cable is considered incorrect installation. Any functional defect arising as a result is excluded from the warranty/guarantee. Kathrein accepts no liability if the customer fails to implement the precautions listed here. In such cases, any claims under the warranty/guarantee are void.

- Before installing or servicing the reader, make sure that the person concerned has read the manual and understood its contents.

8 Introduction to the RIFD System

8.1 RFID System

An RFID system is comprised of the control computer of the reader, antennas, antenna connection cables and the tags. The figure below shows the schematic structure of the system:

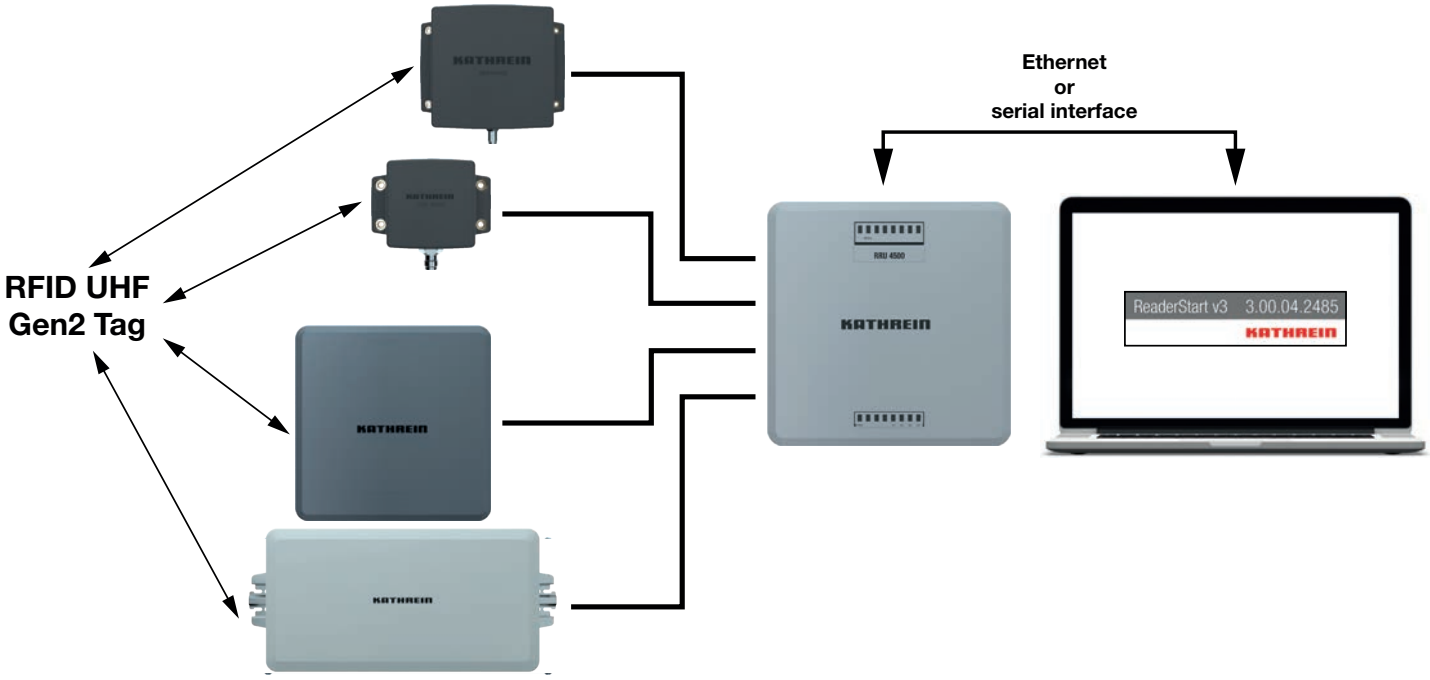

Fig. 1: RFID system (example)

The tags consist of an antenna and a small chip. The chip is the true carrier of the information, the EPC (*Electronic Product Code*) number. This number can identify products or product groups. Alternatively, the EPC can be overwritten with new information.

To read the tag information, the reader switches on an RF carrier by means of a selected antenna, thus supplying the tags in the RF field with energy.

To read the information from a tag, it is necessary to inventory the tags and then select a tag from the population of tags. Upon successful completion of the inventory, the EPC number of each tag can be read and sent to the PC. It is possible to attach additional information to the EPC, for example, the antenna which read it or the time at which it was read.

> **NOTICE**
> The reader operates using the frequency hopping process to avoid faults and interference between readers. Within the FCC area, this procedure is mandatory. The reader changes its transmission frequency randomly, with equal distribution across the 52 available channels. Each channel is used for max. 400 ms in an interval of 20 s.

The *ReaderStart v3* software can be used for testing and parametrising.

The communication between the *ReaderStart v3* and the reader is based on the DLL (*Dynamic Link Library*), which includes the communication protocol, see *Communication Protocol Kathrein RFID UHF Readers*. For specific applications, the user can build its own control software based on the reader DLL. The DLL includes all the relevant commands and functions required to control the reader.

It is necessary for the user to create his own control software. The user-specific control software can run directly on the reader. Therefore, a stand-alone operation without permanent network connection is possible.

> **!** To be able to use the complete range of the reader performance in customer applications, we recommend using the readers ARU 3500 or RRU 4500. It is not possible to run any customer applications on the basic readers, i.e. ARU 2400, ARU 3400 and RRU 4400.

8.2 Kathrein RFID Antenna Interface ©KRAI

With the ©KRAI product series, Kathrein has introduced a revolutionary system. By using Kathrein ©KRAI antennas, it is possible to increase the flexibility due to having several antenna properties at one installation point (in case of PLS and CSB antennas) and functionality (when cascading SMSH antennas).

©KRAI consists of a digital control bus which enables connection between the RFID reader and the RFID antennas to allow control and regulation tasks in remote antennas

8.2.1 WIRA 70 ©KRAI Polarisation Switch Antenna (PLS)

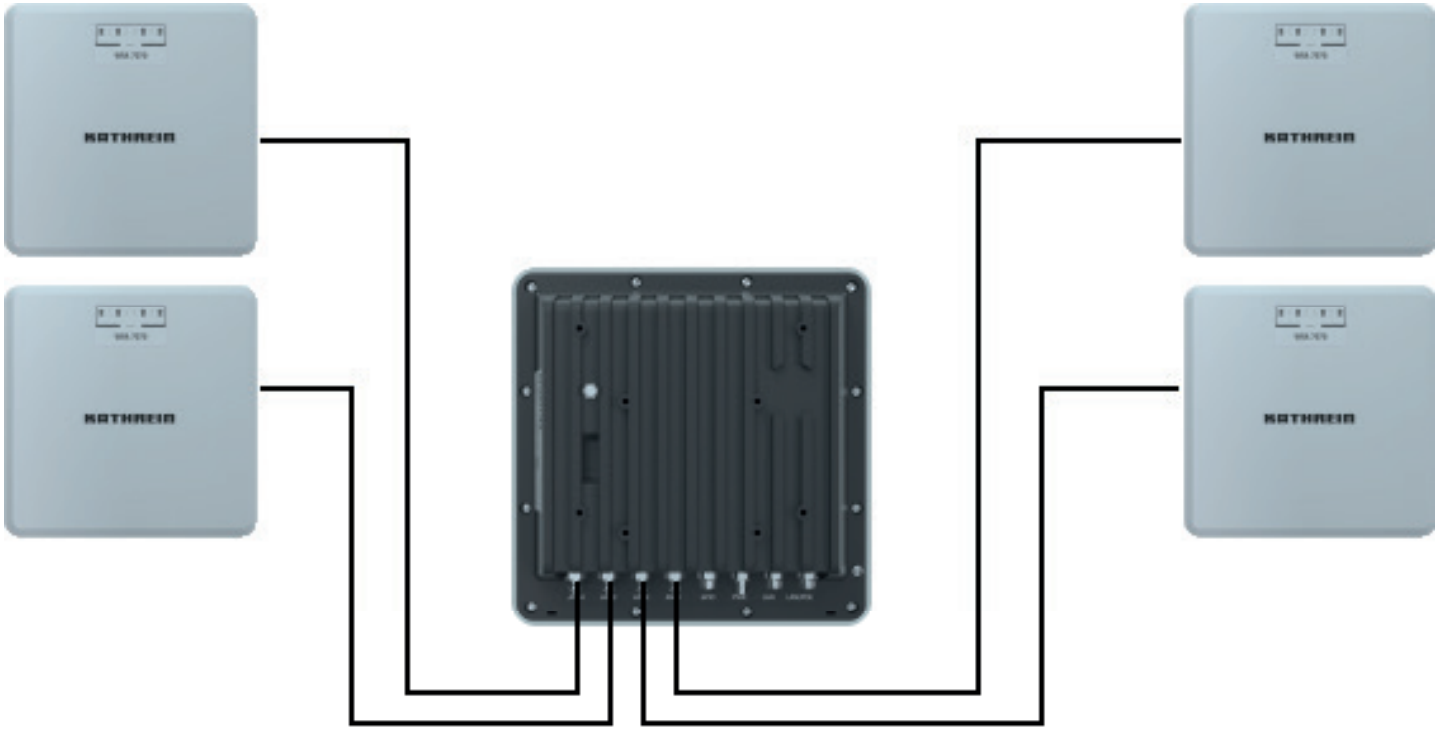

Fig. 2: PLS antennas connected to the reader

With the ©KRAI PLS antenna, built as a WiRa 70° antenna, the polarisation can be switched statically or dynamically. The following settings are possible in any combination:

- circular LHCP
- circular RHCP
- linear horizontal
- linear vertical.

It is possible to select the best polarisation for wide-range application and to carry out a flexible adjustment of the antenna on site.

Furthermore, it is possible to increase the read rate via the switching circular LHCP/RHCP by up to 33%.

Type	Order number	Far-field half-power beam width	Polarisation	Frequency range
WIRA 70 ©KRAI ETSI	52010193	70°/70°	circular	865–868 MHz
WIRA 70 ©KRAI FCC	52010194	70°/70°	circular	902–928 MHz
WRA 7070 ©KRAI ETSI	52010335	70°/70°	circular	865–868 MHz
WRA 7070 ©KRAI FCC	52010336	70°/70°	circular	902–928 MHz

Tip PLS antennas have 4 LEDs to visualise customer applications.
The LEDs will be supplied and controlled by the RRU 4xxx reader via the existing antenna cable.

Tip Note that for the internal antenna, the ARU 3560* reader has all four polarisations already built in. The ARU 3560* reader cannot switch polarisation for external antennas.

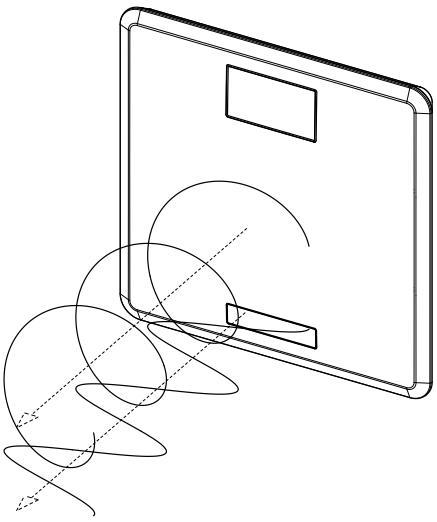

Fig. 3: Circular and linear polarisation

8.2.2 Kathrein RFID Reader with Circular Switch-Beam Antenna

With the ARU 8500 reader and its built-in circular switch-beam antenna (see FIg. 4), it is possible to staticly or dynamically switch the antenna beam in order to track the moved goods.

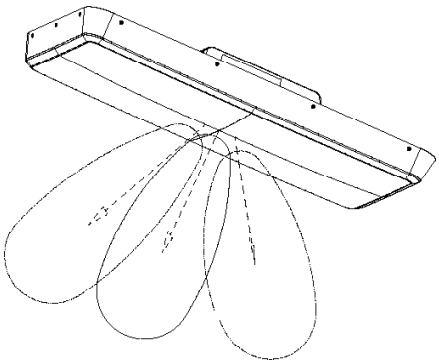

Fig. 4: Circular switch-beam polarisation

*) Product no longer avaibale

The following settings are possible in any combination:

- antenna beam initial position (radiation 90°of the antenna)
- antenna beam switched 35° to the left
- antenna beam switched 35° to the right

The orientation of switching is in the longitudinal direction of the ARU 8500.

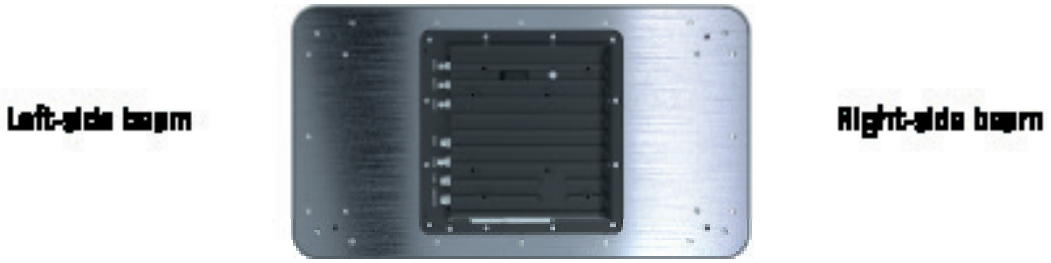

Fig. 5: Circular switch-beam allocation

The ARU 8500 reader is used to detect the movement of the transponder. This information will be added to the general information about the transponder. With 50 antenna sweeps per second, the reader is fast enough to capture even the objects moving at a speed of ≤ 10 km/h. At least two reads are necessary to determine the direction of movement.

8.2.3 ©KRAI SMSH (Smart Shelf) Antenna

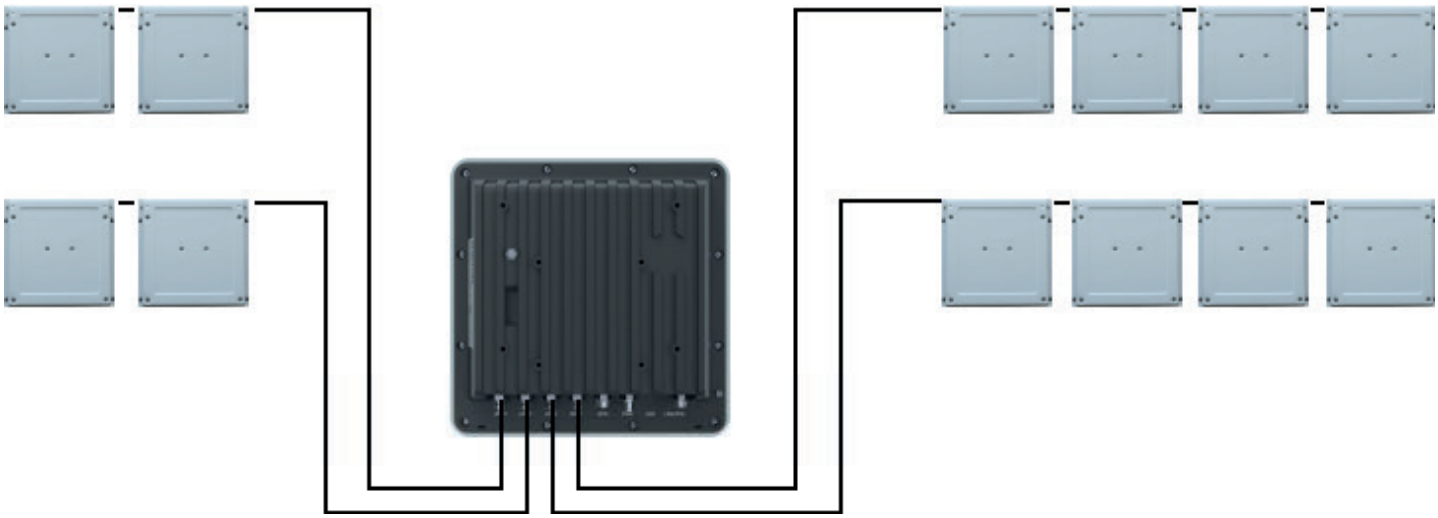

Fig. 6: ©KRAI smart shelf antennas connected to the reader (cascaded)

Up to 8 ©KRAI smart shelf (SMSH) antennas can be cascaded per reader port; 8 antennas x 4 ports = 32 SMSH antennas in total.

The SMSH @KRAI antenna was developed for applications in the field of point of sale, smart shelf applications and Kanban solutions. The antenna is characterised by an extremely homogeneous read zone, which is emitted by the high front-to-back ratio. Therefore, it is suitable for static detection of multiple transponders. Due to the extremely thin design, the antenna module can be integrated into different applications.

The antenna is equipped with an intelligent bypass circuit that allows for cascading up to 8 SMSH antennas per reader port. The control is done by a RRU 4xxx Kathrein RFID reader. The ©KRAI control signals are transmitted via the standard antenna cable.

Type	Order number	Far-field half-power beam width	Polarisation	Frequency range
SMSH 3030 ©KRAI ETSI FCC antenna	52010258	60°/60°	circular	865–928 MHz
SMSH high-gain 3030 ©KRAI ETSI antenna	52010259	60°/60°	circular	865–868 MHz
SMSH high-gain 3030 ©KRAI FCC antenna	52010318	60°/60°	circular	902–928 MHz
SMSH Antenna ETSI	52010523	60°/60°	circular	865–868 MHz
SMSH KRAI Antenna ETSI	52010524	60°/60°	circular	865–868 MHz
SMSH Antenna FCC	52020526	60°/60°	circular	902–928 MHz
SMSH KRAI Antenna FCC	52010527	60°/60°	circular	902–928 MHz

Tip Note that the ©KRAI SMSH high-gain antennas have a read range of up to 3 m.
The ©KRAI SMSH standard antennas read transponders at a distance of up to 1 m.

Tip Note that the SMSH high-gain antennas (order no. 52010260) and SMSH standard antennas (order no. 52010219) do not have ©KRAI and cannot be cascaded.

8.3 Further Reference Material

In order to configure the reader correctly and adapt it to the respective application, it is necessary to have detailed knowledge of the EPCglobal standards of GS. This standard describes the principle of operation of the interface between the tag and the reader.

The parameters available for the configuration of the reader are described in the *Configuration Manual for Kathrein RFID UHF Readers*.

The reader is controlled via the Kathrein reader protocoll (KBRP), the current version of which is described in detail in the *Communication Protocol Kathrein RFID UHF Readers*.

Document	Application
Communication Protocol Kathrein RFID UHF Readers	software development
Configuration Manual for Kathrein RFID UHF Readers	commissioning
Installation Manual for Kathrein Antennas	setup and installation
EPCglobal Gen2 Specification[1)]	software development
Putty – SSH Client (http://www.putty.org)	software development

! Make sure the version of the document matches the software version of the reader, see https://www.kathrein-solutions.com/get-started.

[1)] EPC™ Radio-Frequency Identity Protocols Class-1 Generation-2 UHF RFID Version 2.0.1 at https://www.gs1.org/epcrfid/epc-rfid-uhf-air-interface-protocol/2-0-1.

9 The Reader

9.1 Functional Specification

The Kathrein RFID (Radio Frequency Identification) reader of are multi-protocol-capable device for reading active and passive RFID tags in the frequency range from 865 to 868 MHz for Europe and 902 to 928 MHz for the American market. Based on the latest RFID standards, such as *EPC Gen2v2*/ISO 18000-63, the Kathrein readers support all market leading transponder chip features for security, authentication and encoding. As supplied, the unit can read and write tags in accordance with the *EPC Gen2v2* standard.

It is possible to load additional protocols using software updates.

The device has a maximum of four external antenna ports for connection of the transmission/reception antennas for communication with RFID tags.

For integration into a variety of infrastructures, the device has different communication interfaces, depending on the variant. The power supply is provided either by a 4-pin M12 panel connector in A coding or by PoE+ according to 802.3at (10–57)[1)].

The Kathrein UHF RFID reader system RRU 4xxx is characterised by great flexibility in regard to RFID applications. One reason for it is the wide variety of reading devices compatible to each other, which allows to select a reader from the Kathrein product portfolio ideally suited for the respective application. Another reason for this flexibility is the wide range of parameters for configuring the reader firmware.

9.2 Features

- basic computing module
- dual-core embedded PC
- 1 Ethernet port (RRU 1400, RRU 4400, ARU 3400 and ARU 2400)
- 2nd Ethernet port (with the intelligent switch) (RRU 45xx, ARU 35xx, ARU 8500)
- GPIO
- ©KRAI (RRU 1400, RRU 4xxx and ARU 2400)
- PoE+
- LED visualisation
- Wi-Fi (RRU 4560)
- Bluetooth (RRU 4560)
- 2G/3G (RRU 4570)
- integrated antenna (ARU 2400, ARU 3500, ARU 8500)
- integrated polarisation-switch antenna (ARU 3560)[*)]
- integrated circular switch-beam antenna (ARU 8500)

9.3 Scope of Delivery

- RRU 4xxx reader

[*)] Product no longer avaibale

[1)] Internal supply of GPIO VCC pin is not possible with PoE+

9.4 Accessories

This chapter gives an overview of the accessories available for the reader. For more information, visit our website at https://www.kathrein-solutions.com/products/hardware/accessories or contact our sales office at + 49 8036 90831 20.

9.4.1 Antennas

For use with UHF RFID antennas we recommend the Kathrein antenna types ULoRa, LoRa, MiRa, WiRa. These antenna types are available for all frequency ranges and are water proof according to at least IP 65 standard.

For more information, refer to *User Guide Kathrein RFID Antennas*.

9.4.2 Antenna Cables

Order number	Type	Description
52010174	R-AC 3 TNC-TNCR	LL240 flex, 3 m, IP 67 ruggedised
52010175	R-AC 6 TNC-TNCR	LL240 flex, 6 m, IP 67 ruggedised
52010176	R-AC 10 TNC-TNCR	LL240 flex,10 m, IP 67 ruggedised
52010177	R-AC 15 TNC-TNCR	LL240 flex,15 m, IP 67 ruggedised
52010250	R-AA N-TNC	LL440 flex,15 m, IP 67 ruggedised
52010090	R-AC 3 SMA-TNCR	RG 58, 3 m
52010208	R-AC 05 SMA-SMA	RG 58, 5 m
52010451	R-AC 1 SMA–FAKRA	RFID antenna cable L=1 m, IP40; FAKRA Z-coded to SMA (m); right angle antenna plug
52010452	R-AC 3 SMA–FAKRA	RFID antenna cable L=3 m, IP40; FAKRA Z-coded to SMA (m); right angle antenna plug
52010453	R-AC 5 SMA–FAKRA	RFID antenna cable L=5 m, IP40; FAKRA Z-coded to SMA (m); right angle antenna plug
52010461	R-AC 1 TNC–FAKRA	RFID antenna cable L=1 m, IP40; FAKRA Z-coded to TNC (m); right angle antenna plug
52010462	R-AC 3 TNC–FAKRA	RFID antenna cable L=3 m, IP40; FAKRA Z-coded to TNC (m); right angle antenna plug
52010463	R-AC 5 TNC–FAKRA	RFID antenna cable L=5 m, IP40; FAKRA Z-coded to TNC (m); right angle antenna plug
52010485	R-AC 0.5 FAKRA-FAKRA	RFID antenna cable L=0.5 m, IP40; FAKRA Z-coded to FAKRA Z-coded
52010486	R-AC 1 FAKRA-FAKRA	RFID antenna cable L=1 m, IP40; FAKRA Z-coded to FAKRA Z-coded
52010487	R-AC 3 FAKRA-FAKRA	RFID antenna cable L=3 m, IP40; FAKRA Z-coded to FAKRA Z-coded
52010488	R-AC 5 FAKRA-FAKRA	RFID antenna cable L=5 m, IP40; FAKRA Z-coded to FAKRA Z-coded
52010527	R-AC 1 FAKRA-TNCR	RFID antenna cable L=1 m, IP40; FAKRA Z-coded to TNCrev
52010528	R-AC 3 FAKRA-TNCR	RFID antenna cable L=3 m, IP40; FAKRA Z-coded to TNCrev
52010529	R-AC 5 FAKRA-TNCR	RFID antenna cable L=5 m, IP40; FAKRA Z-coded to TNCrev

9.4.3 Antenna Adapters

Order number	Type	Description
52010178	R-AA TNC-N(f-m)	adapter TNC-N (f-m)
52010243	R-AA TNC-SMA (f-m)	adapter TNC-SMA (f-m)
52010598	R-AA TNC-TNC	right angle adapter TNC-TNC (f-m)

9.4.4 Antenna Mounting Accessories

Pole Mounting

Order number	Type	Description
52010005	MK-AMB-100 Outdoor	wall mount/mast mount kit for WIRA 30° antennas

Wall Mounting

Order number	Type	Description
52010261	MK-WM-100-100 Indoor	wall mount kit for all readers and WRA 6060/7070 antennas

Wall/Pole Mounting

Order number	Type	Description
52010262	MK-WPGM-100-100 Outdoor	wall/pole mount kit for WIRA 40° antennas

9.4.5 Antenna Protective Cover

Order number	Type	Description
52010224	SMSH-30-30PC	protective cover for SMSH
52010356	SMSH-BP-ALU	aluminium backplate for SMSH

9.4.6 Reader Connecting Cables

Order number	Type	Description
52010358	R-CC3-10 DC	RRU/ARU DC power cable, 10 m
52010359	R-CC3-03 DC	RRU/ARU DC power cable, 3 m
52010360	R-CC3-10 ETH	RRU/ARU Ethernet cable M12/RJ45, 10 m
52020361	R-CC3-03 ETH	RRU/ARU Ethernet cable M12/RJ45, 3 m
52010362	R-CC3-10 GPIO	RRU/ARU GPIO cable M12, 10 m
52010363	R-CC3-03 GPIO	RRU/ARU GPIO cable M12, 3 m
52010373	R-BC3-10 ETH	RRU/ARU Ethernet bridge cable

9.4.7 Reader AC/DC Adapters

Order number	Type	Description
52010364	R-RPA3 24 VDC – 90 W	RRU/ARU AC/DC adapter 24 V/90 W
52010365	R-RPA 24 VDC – 72 W	RRU/ARU AC/DC adapter 24 V/72 W

52010366	R-RPA 24 VDC – 90 W	RRU/ARU AC/DC adapter 24 V/90 W
52010474	R-RPA 24DC-18W	AC/DC adapter, 24 V/18 W, AC 110–230 V, power plug device, interchangeable AC plug

9.4.8 PoE+ Power Supply Unit

Order number	Type	Description
52020369	R-ETH-SW-100	PoE+ Ethernet switch, 4-port
52010370	R-POE-ONJ-30	PoE+ injector, 30 W, 100Mbit für RRU, ARU and M-ARU

9.4.9 Reader and Antenna Wall/Pole Mounting Kit

Order number	Type	Description
52010351	MK-WPM3-OSS Outdoor	wall/pole mount kit for RRU 4xxx, ARU 3xxx, WRA 7070 antenna
52010368	MK-PMA-OGV	pole mount adapter for 52010351

9.4.10 Reader Protective Covers and Caps

Order number	Type	Description
52010376	PCS-G3-IP67	protective cap for RRU 4xx and ARU 3xxx, IP 67
52010367	R-RVP3-VPP-SS	vandalism protective cover for RRU 4xxx and ARU 3xxx

9.4.11 Connection Boxes

Order number	Type	Description
52010539	CB2-A	connection box, advanced
52010540	CB2-B	connection box, basic

10 Connections and Displays

The following chapters provide details of the connections and the pin assignments of plugs and sockets.

10.1 RRU 1400

10.1.1 Front View

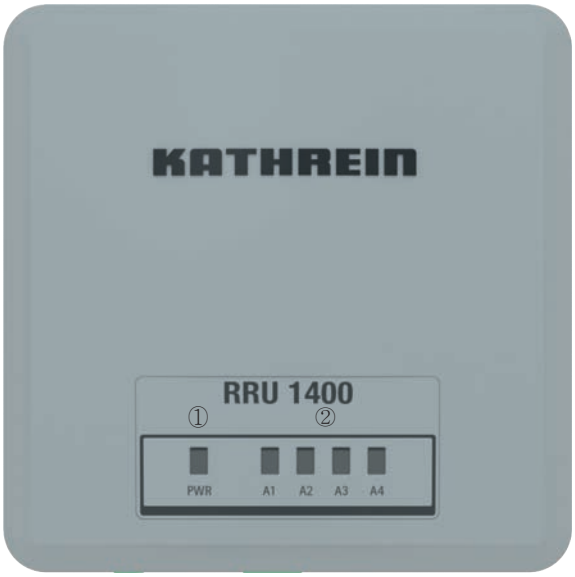

Fig. 11: RRU 1400 - Displays

No.	Name	Function
①	*PWR*	indicates whether the reader is on; see also *15.6 Reading the PWR LED Indications, p. 55*
②	basic LEDs (A1-A4)	indicate if an RF signal is on for antennas 1–4 (default setting) ► For other functions of the basic LEDs, see *Selecting Functions, p. 99*

Related topics

15.6 Reading the PWR LED Indications, p. 55

10.1.2 Rear View

Fig. 12: RRU 1400

No.	Name	Function
①	ANT1 ... 4	4x FAKRA, 50 Ohm, to connect an antenna
②	*GPIO*	to detect external sensors and to control external actors; see also GPIO Functions, p. 101
③	*LAN/PoE*	main Ethernet port with PoE connectivity • to control the reader • to provide power supply over Ethernet
④	*PWR*	to connect to a DC power supply, 10–30 V
⑤		*4 x tapped holes to connect to the MK-WPM3-OSS Outdoor wall/pole mount kit (order number 52010351 or 52010262)*
⑥		earth bolt

GPIO

Printed circuit board connector, 5-pole, screw connection with tension sleeve

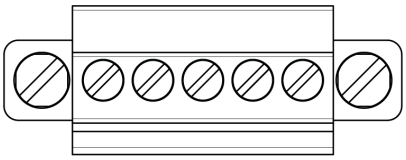

Pin	Allocation
1	OUT_CMN
2	OUTPUT_1
3	INPUT_3
4	INPUT_CMN
5	INPUT_1
6	GND
7	UB
8	OUTPUT_4
9	OUTPUT_3
10	OUTPUT_2
11	INPUT_2
12	INPUT_4

Related topics

17.6 GPIO Functions, p. 101

Power Supply

Printed circuit board connector 2-pole, screw connection with tension sleeve.

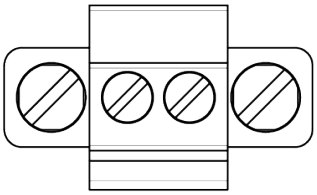

Pin	Allocation
1	GND
2	+24 V DC

Bear in mind that only power supply units with LPS (Limited Power Source) or NEC Class 2 power supply units are approved for operation with the device. This means that the secondary side of the power supply unit is limited to a power of maximum 100 W

N'oubliez pas que seuls les blocs d'alimentation avec LPS (Limited Power Source, source d'alimentation limitée) ou les blocs d'alimentation NEC de classe 2 sont autorisés pour fonctionner avec l'appareil. Cela signifie que le côté secondaire du bloc d'alimentation est limité à une puissance de maximum 100 W

Ethernet

NOTICE

Risk of malfunction!

If other cables then specified are used, the communication with the reader is either interrupted or there is a malfunction.

► Only use shielded cables.

RF45, 8-pole

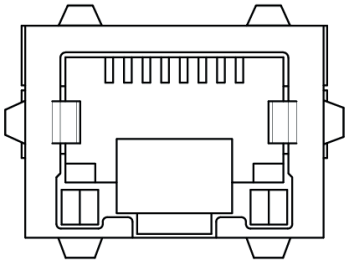

Pinout

Pin	Data	PoE
1	TX+	PoE Mode A
2	TX-	PoE Mode A
3	RX+	PoE Mode B
4		PoE Mode A
5		PoE Mode A
6	RX-	PoE Mode B
7		PoE Mode B
8		PoE Mode B

Buzzer

Furthermore, the reader is fitted with a buzzer which, in addition to the LED, indicates successful booting (1 x short) or an error (2 x long).

10.2 RRU 4xxx and ARU 3xxx

Depending of the device variant, the reader has various connection options. The illustrations below shows an RRU 4000 standard reader with all its connection options.

10.2.1 Front View

Fig. 13: RRU 4000 – Displays

No.	Name	Function
①	*PWR*	indicates whether the reader is on; see also *15.6 Reading the PWR LED Indications, p. 60*
②	basic LEDs (A1-A4)	indicate if an RF signal is on for antennas 1–4 (default setting) ► For other functions of the basic LEDs, see *Selecting Functions, p. 104*
③	high-end LEDs	see *LED, p. 103* only available for ARU x5xx and RRU x5xx readers

Related topics

15.6 Reading the PWR LED Indications, p. 60

17.4 LED, p. 103

10.2.2 Rear View

Fig. 14: RRU 4000

No.	Name	Function
①	*ANT 4*[1]	R-TNC, 50 Ohm, to connect an antenna
②	*ANT 3*	R-TNC, 50 Ohm, to connect an antenna
③	*ANT 2*	R-TNC, 50 Ohm, to connect an antenna
④	*ANT 1*	R-TNC, 50 Ohm, to connect an antenna
⑤	*GPIO*	to detect external sensors and to control external actors; see also *GPIO Functions, p. 106*
⑥	*PWR*	to connect to a DC power supply, 10–30 V
⑦	*LAN*[2]	second Ethernet port ● to connect to a sub network ● to connect external Ethernet devices
⑧	*LAN/PoE*	main Ethernet port with PoE+-connectivity ● to control the reader ● to provide power supply over Ethernet

[1] In the ARU 3xxx readers, there are only 3 antenna ports

[2] Available for RRU 45xx and ARU 35xx

GPIO

M12, A-coded, 12-pin, female

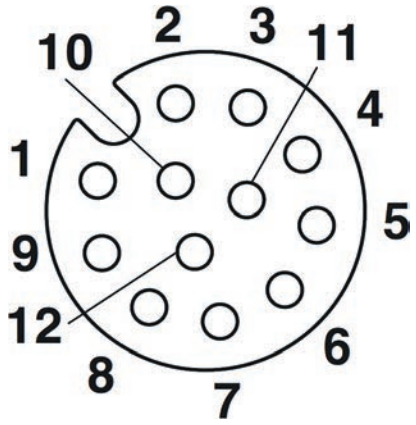

Pin	Allocation
1	OUT_CMN
2	OUTPUT_1
3	INPUT_3
4	INPUT_CMN
5	INPUT_1
6	GND
7	UB
8	OUTPUT_4
9	OUTPUT_3
10	OUTPUT_2
11	INPUT_2
12	INPUT_4

Related topics

17.6 GPIO Functions, p. 106

Power Supply

The power supply is arranged as a four-pin round-pin plug with an M12 connection thread in A-coding.

M12, A-coded, 4-pin, male

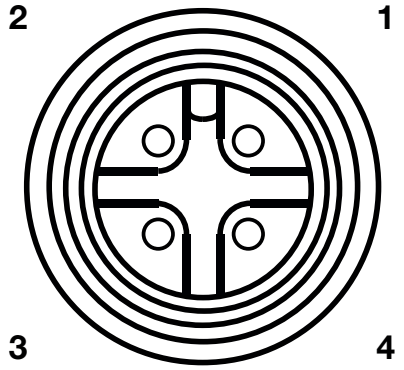

Pin	Allocation
1	+24 V DC
2	GND
3	GND
4	+24 V DC

Bear in mind that only power supply units with LPS (*Limited Power Source*) or NEC Class 2 power supply units are approved for operation with the device. This means that the secondary side of the power supply unit is limited to a power of maximum 100 W.

N'oubliez pas que seuls les blocs d'alimentation avec LPS (Limited Power Source, source d'alimentation limitée) ou les blocs d'alimentation NEC de classe 2 sont autorisés pour fonctionner avec l'appareil. Cela signifie que le côté secondaire du bloc d'alimentation est limité à une puissance de maximum 100 W.

Ethernet

NOTICE

Risk of malfunction!

If other cables then specified are used, the communication with the reader is either interrupted or there is a malfunction.

► Only use shielded cables.

M12, X-coded, 8-pin, female

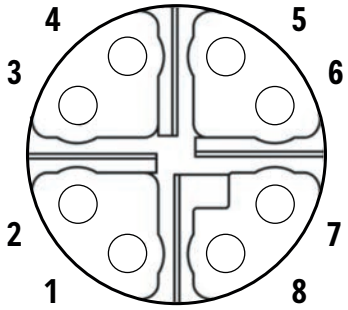

Pin	Allocation
1	TX+ / PoE+1
2	TX- / PoE+1
3	RX+ / PoE+2
4	RX- / PoE+2
5	PoE+1
6	PoE+2
7	PoE+3
8	PoE+4

Buzzer

Furthermore, the reader is fitted with a buzzer which, in addition to the LED, indicates successful booting (1 x short) or an error (2 x long).

10.3 ARU 2400

10.3.1 Front View

Fig. 15: ARU 2400 – Displays

No.	Name	Function
①	*PWR*	indicates whether the reader is on; see also *15.6 Reading the PWR LED Indications, p. 60*
②	basic LEDs (A1-A4)	indicate if an RF signal is on for antennas 1–4 (default setting) ► For other functions of the basic LEDs, see *Selecting Functions, p. 104*

Related topics

15.6 Reading the PWR LED Indications, p. 60

10.3.2 Rear View

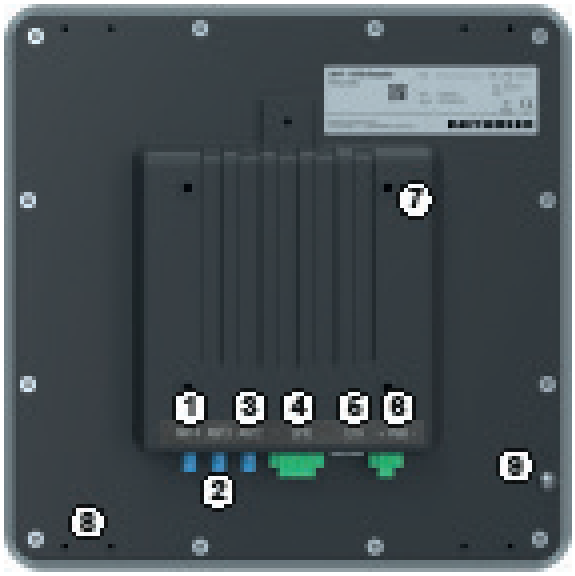

Fig. 16: ARU 2400

No.	Name	Function
①	*ANT 4*	FAKRA, 50 Ohm, to connect an antenna
②	*ANT 3*	FAKRA, 50 Ohm, to connect an antenna
③	*ANT 2*	FAKRA, 50 Ohm, to connect an antenna
④	*GPIO*	to detect external sensors and to control external actors; see also *GPIO Functions, p. 106*
⑤	*LAN/PoE*	main Ethernet port with PoE connectivity ● to control the reader ● to provide power supply over Ethernet
⑥	*PWR*	to connect to a DC power supply, 10–30 V
⑦		4 x tapped holes to connect to the MK-WPM3-OSS Outdoor wall/pole mount kit (order number 52010351 or 52010262)
⑧		8 x tapped holes to connect to the MK-SHM-4IP shelf mounting kit (order number 52010479)
⑨		earth bolt

GPIO

Printed circuit board connector, 5-pole, screw connection with tension sleeve

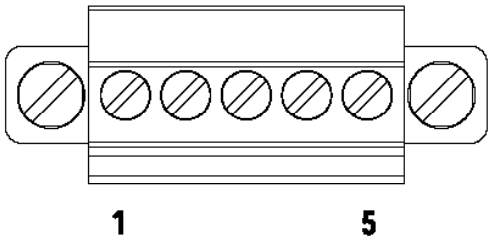

Pin	Allocation
1	GND OUT_CMN
2	INPUT_1
3	INPUT_2
4	OUTPUT_1 (open drain)
5	OUTPUT_2 (open drain)

Related topics

17.6 GPIO Functions, p. 106

Power Supply

Printed circuit board connector 2-pole, screw connection with tension sleeve

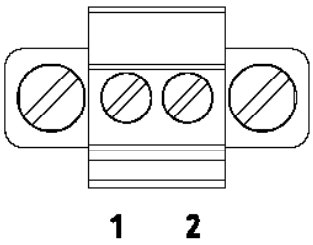

Pin	Allocation
1	GND
2	+24 V DC

Bear in mind that only power supply units with LPS (*Limited Power Source*) or NEC Class 2 power supply units are approved for operation with the device. This means that the secondary side of the power supply unit is limited to a power of maximum 100 W.

N'oubliez pas que seuls les blocs d'alimentation avec LPS (Limited Power Source, source d'alimentation limitée) ou les blocs d'alimentation NEC de classe 2 sont autorisés pour fonctionner avec l'appareil. Cela signifie que le côté secondaire du bloc d'alimentation est limité à une puissance de maximum 100 W.

Ethernet

NOTICE

Risk of malfunction!

If other cables then specified are used, the communication with the reader is either interrupted or there is a malfunction.

► Only use shielded cables.

RJ45, 8-pole

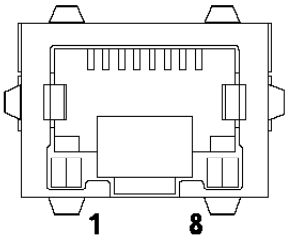

Pin	Allocation
1	TX+ / PoE1
2	TX- / PoE1
3	RX+ / PoE2
4	PoE1
5	PoE1
6	RX- / PoE2
7	PoE2
8	PoE4

Buzzer

Furthermore, the reader is fitted with a buzzer which, in addition to the LED, indicates successful booting (1 x short) or an error (2 x long).

10.4 ARU 8500

10.4.1 Front View

Fig. 17: ARU 8500 – Displays

No.	Name	Function
①	*PWR*	indicates whether the reader is on; see also *15.6 Reading the PWR LED Indications, p. 60*
②	basic LEDs (A1-A4)	indicate if an RF signal is on for antennas 1–4 (default setting) ► For other functions of the basic LEDs, see *Selecting Functions, p. 104*

Related topics

15.6 Reading the PWR LED Indications, p. 60

10.4.2 Rear View

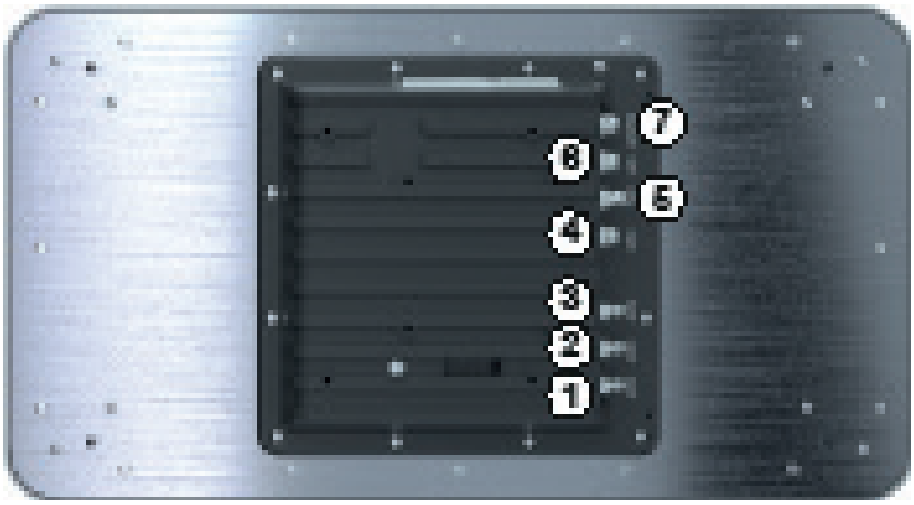

Fig. 18: ARU 8500

No.	Name	Function
①	*ANT 4*	R-TNC, 50 Ohm, to connect an antenna
②	*ANT 3*	R-TNC, 50 Ohm, to connect an antenna
③	*ANT 2*	R-TNC, 50 Ohm, to connect an antenna
④	*GPIO*	to detect external sensors and to control external actors; see also *GPIO Functions, p. 106*
⑤	*PWR*	to connect to a DC power supply, 10–30 V
⑥	*LAN*	second Ethernet port ● to connect to a sub network ● to connect external Ethernet devices
⑦	*LAN/PoE*	main Ethernet port with PoE connectivity ● to control the reader ● to provide power supply over Ethernet

GPIO

M12, A-coded, 12-pin, female

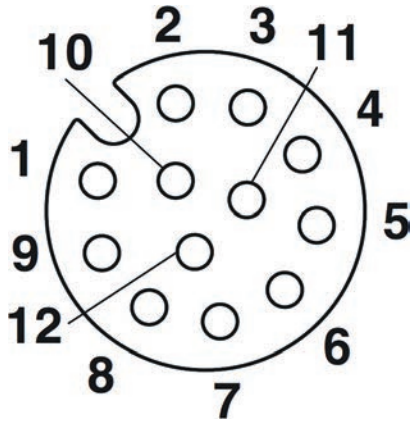

Pin	Allocation
1	OUT_CMN
2	OUTPUT_1
3	INPUT_3
4	INPUT_CMN
5	INPUT_1
6	GND
7	UB
8	OUTPUT_4
9	OUTPUT_3
10	OUTPUT_2
11	INPUT_2
12	INPUT_4

Related topics

17.6 GPIO Functions, p. 106

Power Supply

The power supply is arranged as a four-pin round-pin plug with an M12 connection thread in A-coding.

M12, A-coded, 4-pin, male

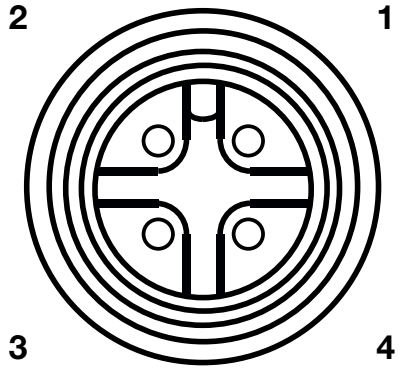

Pin	Allocation
1	+24 V DC
2	GND
3	GND
4	+24 V DC

Bear in mind that only power supply units with LPS (*Limited Power Source*) or NEC Class 2 power supply units are approved for operation with the device. This means that the secondary side of the power supply unit is limited to a power of maximum 100 W.

N'oubliez pas que seuls les blocs d'alimentation avec LPS (Limited Power Source, source d'alimentation limitée) ou les blocs d'alimentation NEC de classe 2 sont autorisés pour fonctionner avec l'appareil. Cela signifie que le côté secondaire du bloc d'alimentation est limité à une puissance de maximum 100 W.

Ethernet

NOTICE

Risk of malfunction!

If other cables then specified are used, the communication with the reader is either interrupted or there is a malfunction.

► Only use shielded cables.

M12, X-coded, 8-pin, female

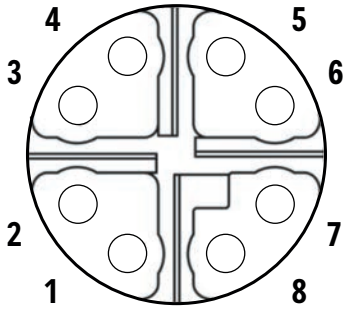

Pin	Allocation
1	TX+ / PoE+1
2	TX- / PoE+1
3	RX+ / PoE+2
4	RX- / PoE+2
5	PoE+1
6	PoE+1
7	PoE+2
8	PoE+2

Buzzer

Furthermore, the reader is fitted with a buzzer which, in addition to the LED, indicates successful booting (1 x short) or an error (2 x long).

11 Installing the Reader

When the connections are plugged in, the device satisfies the protection class IP65 (RRU and ARU).

11.1 Selecting the Installation Site

WARNING

Danger to life from electric shock or fire hazard due to incorrect voltage, insufficient ventilation, moisture, direct sunlight, heat or naked flames!

- ► When installing the unit in cabinets or shelves, make sure there is sufficient ventilation.
- ► When selecting the installation location, make sure there is sufficient space around the unit for appropriate dissipation of the heat generated by the unit.
- ► Do not expose the unit to inadmissible heat or fire.
- ► Do not install the device close to the sources of heat, e.g. heating.
- ► Do not place anything with a naked flame on the device.
- ► Make sure that the maximum operating temperature from –20 to +55°C is not exceeded.
- ► Make sure that the support surface has a sufficient load-bearing capacity/strength.

NOTICE

Risk of material damage due to the screws screwed into the reader housing too deep!

If the screws are screwed into the reader housing deeper than 10 mm, the housing is no longer water proof.

- ► When mounting the reader, make sure that the screws are screwed into the unit housing no deeper than 10 mm.

11.2 Installing the RRU 1400 Reader

11.2.1 Wall Mounting

At the rear panel, the reader has threaded holes.

► See the drawing below for the dimensions of the hole

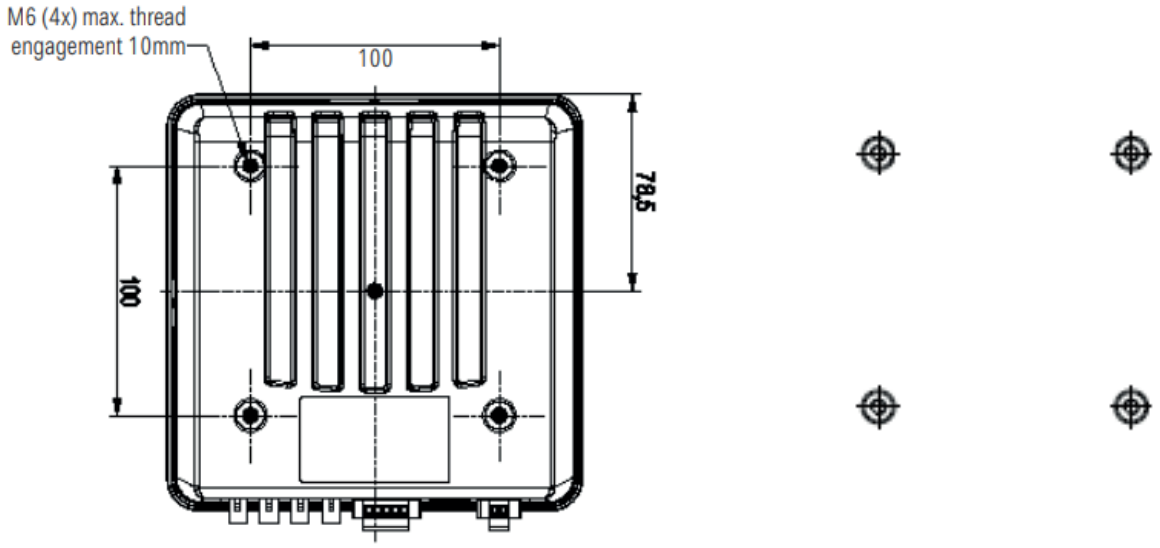

Fig. 19: RRU 1400 dimensions, rear view

11.2.2 Wall/Pole Mounting

For ease of installation, a bracket is available as an accessory to mount the reader on a wall (52010351 or 52010262) or a mast (52010351 and 52010368).

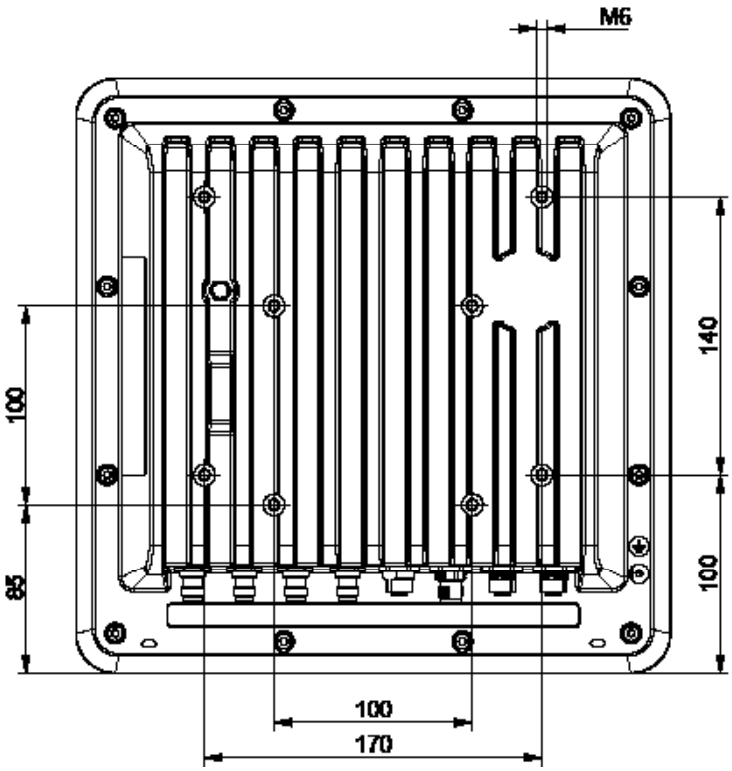

Fig. 20: RRU 1400 dimensions, rear view

11.3 Installing the RRU 4xxx and ARU 3xxx Readers

11.3.1 Wall Mounting

At the rear panel, the reader has threaded holes.

► See the drawing below for the dimensions of the holes.

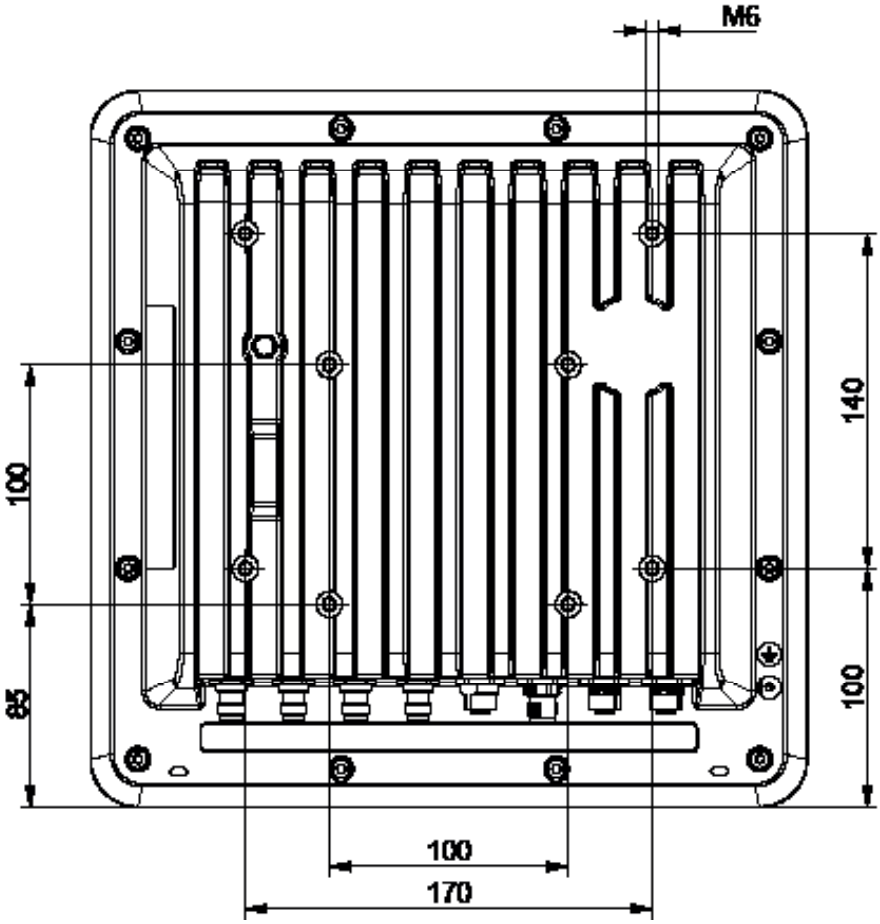

Fig. 21: RRU 4xxx and ARU 3xxx dimensions, rear view

11.3.2 Wall/Pole Mounting

For ease of installation, a bracket is available as an accessory to mount the reader on a wall (52010351 or 52010262) or a mast (52010351 and 52010368).

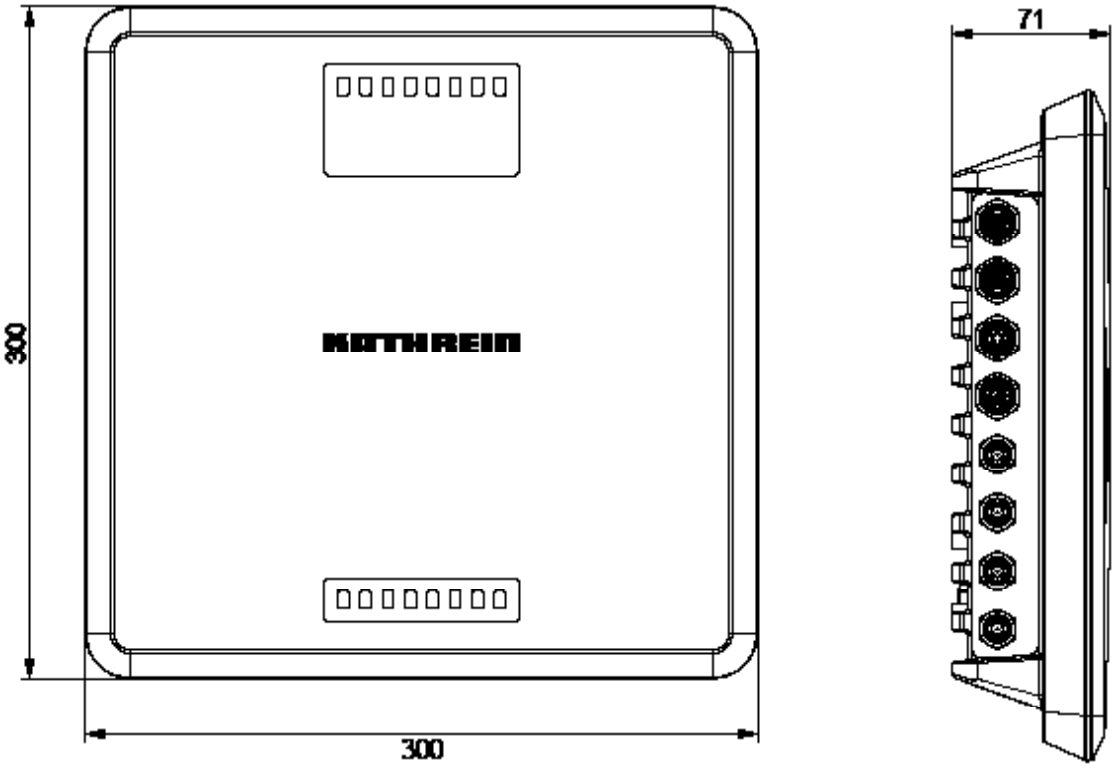

Fig. 22: RRU 4xxx and ARU 3xxx dimensions, front and side view

11.4 Installing the ARU 2400 Reader

11.4.1 Wall Mounting

At the rear panel, the reader has 4 threaded holes.

► See the drawing below for the dimensions of the holes.

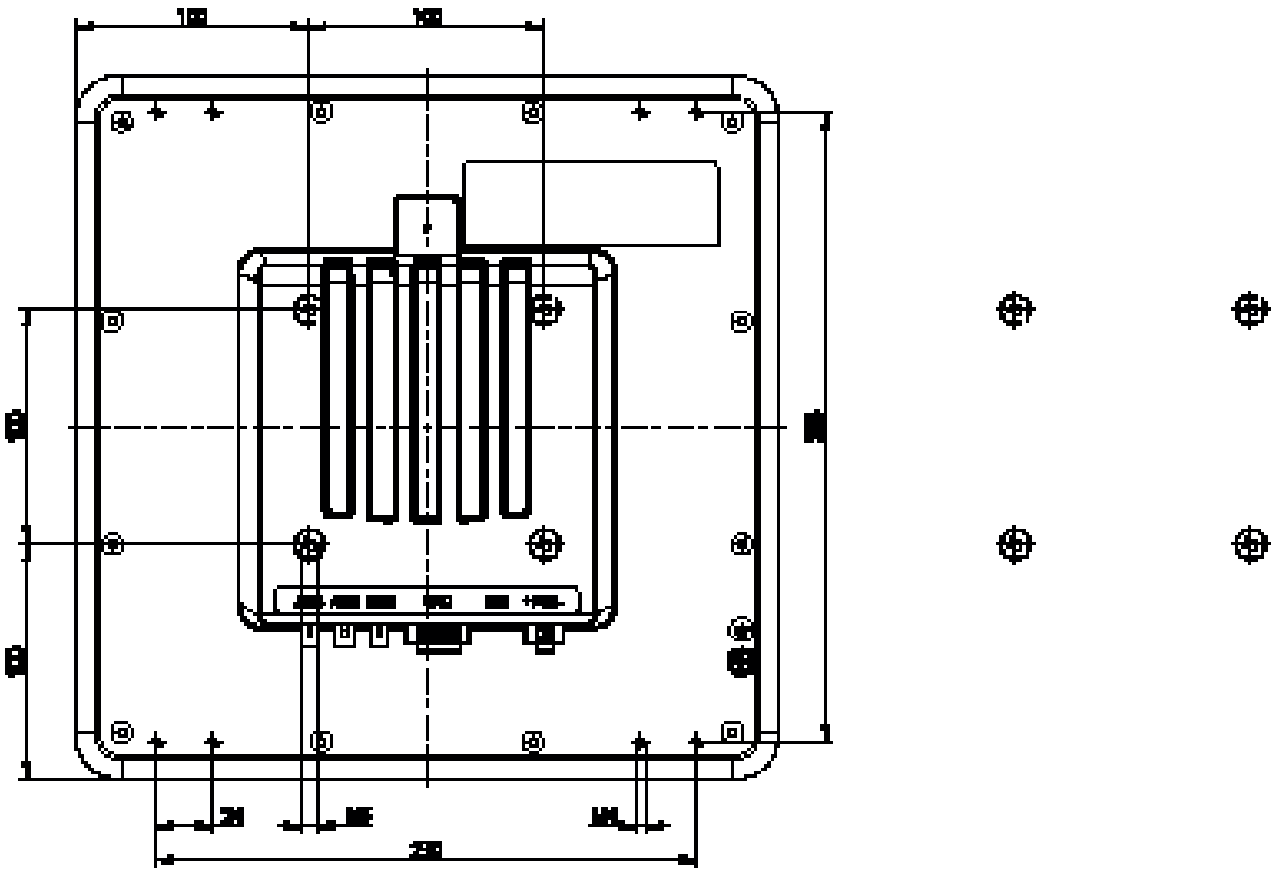

Fig. 23: ARU 2400 dimensions, rear view

11.4.2 Shelf Mounting

At the rear panel, the reader has 8 threaded holes for the MS-SHM-4IP shelf mounting kit (available as an accessory, order number 52010479), for mounting on ITEM or Bosch Rexroth shelves.

► See the drawing below for the dimensions of the 8 holes.

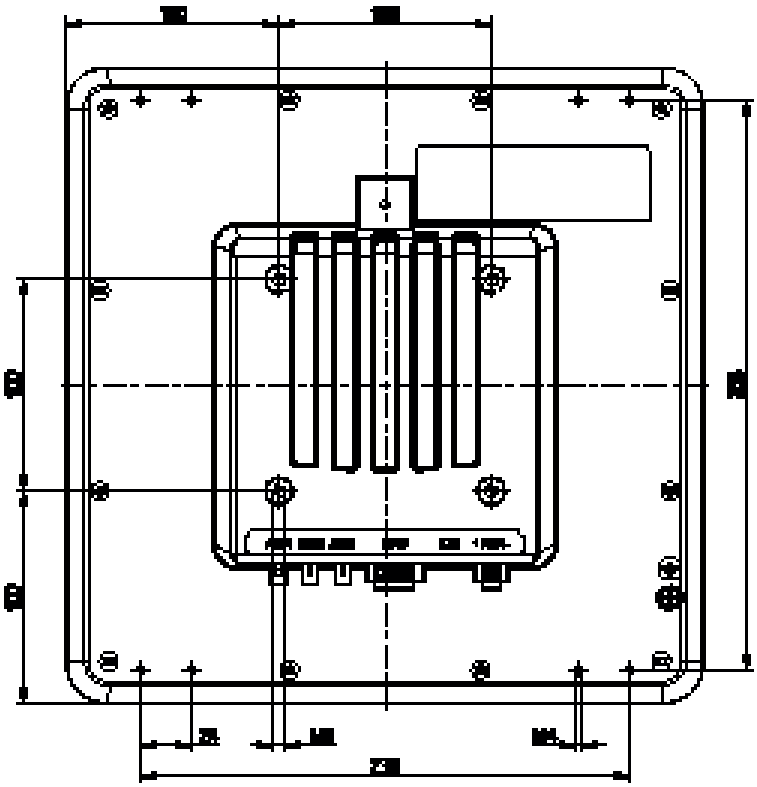

Fig 24: ARU 2400 dimensions, rear view

12 Inserting a SIM Card into the ARU 3570 Reader

The ARU 3500 reader has a 2G/3G connection option. This chapter describes how to insert a SIM card into the reader.

✓ You have a micro-SIM card available.

1. Open the screw at ①.
   ☒ A SIM card slot is seen:

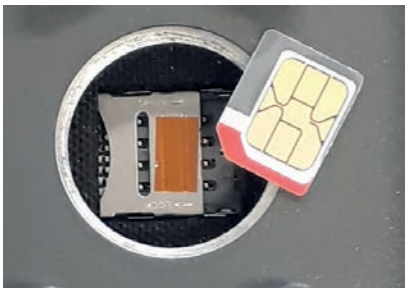

2. Open the SIM card slot in the direction shown.
3. Insert the micro-SIM card into the slot.
4. Lock the slot in the direction shown.
5. Close the screw to seal the SIM card slot.
   ☒ It is not possible to activate the SIM card in the *ReaderStart* software and use it.

13 Transmission Methods

13.1 UART transmission (RS232, RS422, RS485 or similar)

13.1.1 Physical Layer

A full or half-duplex connection such as RS232, RS422 or RS485 is used for the physical layer.

13.1.2 Data Link Layer

Transmission takes place in frames and blocks. A block comprises a maximum of 256 frames. A frame comprises a maximum of 256 bytes, of which a maximum of 250 bytes can be user data. The result is a maximum block size of 64000 bytes of user data.

The data link layer is used to safeguard the data between the sender and recipient. The sender receives a response from the recipient for each correct frame received. If the sender does not receive a response from the recipient within a time window of 350 milliseconds after sending a frame, the frame sent is repeated until the error counter signals the cancellation of the transmission.

Frame Structure

5A LL SS FF DD ... DD P1 P2

5A	start code for synchronisation
LL	number of bytes in the frame, not including the start code
SS	status byte
FF	frame number
DD	user data
P1	16-bit checksum, low-byte
P2	16-bit checksum, high-byte

Start Code and Synchronisation

The start code is used to synchronise the recipient to the sender. Furthermore, the recipient synchronises to the start of a frame when no data have been received for 100 milliseconds.

Status Byte

The status byte has the following meaning:

50	data packet
A0	response *OK*
LL	response *Memory error* (the recipient was unable to allocate any memory for the received data block)

A response is only 3 bytes long and is not CRC-checked.

OK	*5A 02 A0*
Memory error	*5A 02 A1*

Frame Number

The frame number shows how many more frames belong to this data block. Only the first frame in a data block can be shorter than 256 bytes. Each additional frame must have a length of 256 bytes (length byte LL is FF).

Therefore, it is possible to calculate the block size from the first frame number, see the example below.

A block with 700 bytes of user data is to be transmitted. For this purpose, the block is divided into three frames:

1st frame: *5A CD 50 02* — 200 bytes of user data follow — P1 P2

2nd frame: *5A FF 50 01* — 250 bytes of user data follow — P1 P2

3rd frame: *5A FF 50 00* — 250 bytes of user data follow — P1 P2

The receiver can use the frame number of the first frame (here *02*) and its length byte to calculate the block size (block size = frame number * 250 bytes + length byte -5) (here in the example: 2 * 250 bytes + 205 bytes - 5 bytes = 700 bytes), and reserve an appropriate amount of memory for the data.

User Data

User data are the bytes in a frame that flow into the block transmitted.

Checksum

The checksum is calculated using the polynomial x^16 + x^12 + x^5 + 1 with a pre-initialisation of 0x0000 from the start code to the last user data byte.

Network Layer

As the KBRP is a point-to-point protocol, there is no network layer.

Transport Layer, Session Layer, Presentation Layer,

Do not exist.

Application Layer

The application layer transmits data blocks from 1 to a maximum of 64000 bytes.

13.2 LLRP Protocol

Based on the TCP communication protocol, the Kathrein RFID reader with the Linux operating system can handle the so-called *Low Level Reader Protocol* (LLRP).

It is a communication interface between an RFID reader and a LLRP-enabled application software standardised by *EPCglobal* (http://www.epcglobalinc.org/standards/llrp). The default port for LLRP is 5084.

The LLRP protocol is roughly divided into the following parts:

- Automatic query of the reader functions via the application software
- Configuration of the reader functions via the application software
- Triggering of read and write operations on the air interface voa the application software
- Transfer of the found tag data to the application software

To start the LLRP application, use the *AppManager* of the *ReaderStart*. In the menu, it is possible to load the LLRP protocol engine by means of *Install App* and start it using *Start App*.

To test the Kathrein reader with the LLRP protocol, it is possible to use the open-source programming tool *Eclipse (IDE)*. By means of the so-called *LLRP Commander* it is possible to control and operate the reader.

> **!** *Eclipse (IDE)* and *LLRP Commander* are not part of the Kathrein RFID software.

13.3 Ethernet Transmission

A data transmission layer has been used for communication to our reader over Ethernet, just like in serial communication.

The data transmission layer over Ethernet is a much more simple solution here since the TCP/IP protocol already has a data security layer. As TCP/IP is a stream protocol, only the packet beginning and packet end are necessary.

There are 3 frame types in the protocol used in the Generation 3 readers.

If no data have been received for 100 milliseconds within a frame, the received part frame is dismissed. The payload (D1 to Dn) is identical to the Generation 2 payload.

13.3.1 Ethernet Transmission Generation 2 Readers

Frame Set-up

A frame looks as follows:

Start + data block + end

The start is made up of *0xAA 0xBB 0x01 0x01*, whereby the first 1 is the Datetransmit byte and the second 1 is a Stuff-byte. The end is made up of *0xAA 0xCC*. If the byte *0xAA* appears in the KBRP frame, it must be doubled (*0XAA 0xAA 0xAA*).

Port

The TCP communication port is the port 4007.

Example

The frame *ASyncGetEPCs* is shown here as an example. The ID for this command is *0x0111*, which makes the frame look as follows:

0xAA 0xBB 0x01 0x01 0x11 0x01 0xAA 0xCC

Extended Block Structure

If a data block to be transmitted exceeds 16 kB, it is necessary to subdivide into several 16-kB blocks. These blocks receive a block number, and the first block contains the total data length. It is necessary to confirm the reception of each block by means of an answer.

First block:

Start + block number always 0 + 4-byte total data length + data block + end

All other blocks:

Start + block number + data block + end

Answer to confirm the reception:

Start + block number + end

The start consists of *0xAA 0xBB 0x0E 0x01*. The end consists of *0xAA 0xCC*. If the *0xAA* occurs in the KBRP frame, it is necessary to double it: *0xAA → 0xAA 0xAA*.

13.3.2 Ethernet Transmission Generation 3 Readers

Frame Set-up

Data Frame

5A 50 L1 L2 L3 L4 D1 ... Dn A5

5A	start code
50	code for a data frame
L1 – L4	number of data bytes (D1 to Dn) in the data frame (32 bit; LSB first)
D1 – D4	data bytes to be transmitted (payload)
A5	end code

Ping

5A 5F A5

5A	start code
5F	ping code
A5	end code

Response to Ping

5A 5F A5

5A	start code
5F	ping response code
A5	end code

Port

The communication takes place via the TCP port 4007 as in case of Generation 2 readers.

Example

The frame *ASyncGetEPCs* is shown here as an example. The ID for this command is *0x0111*, which makes the frame look as follows:

0x5A 0x50 0x02 0x00 0x00 0x00 0x11 0x01 0xA5

Extended Block Structure

If a data block to be transmitted exceeds 16 kB, it is necessary to subdivide into several 16-kB blocks. These blocks receive a block number, and the first block contains the total data length. It is necessary to confirm the reception of each block by means of an answer.

First block:

Start + block number always 0 + 4-byte total data length + data block + end

All other blocks:

Start + block number + data block + end

Answer to confirm the reception:

Start + block number + end

The start consists of *0xAA 0xBB 0x0E 0x01*. The end consists of *0xAA 0xCC*. If the *0xAA* occurs in the KBRP frame, it is necessary to double it: *0xAA → 0xAA 0xAA*.

14 Connecting the Reader

14.1 Connecting Digital Inputs and Outputs of the RRU 4xxx, ARU 3xxx and ARU 8500 Readers Directly

The activation and evaluation of the inputs and outputs is carried out using the *ReaderStart V3* software, with the DLL supplied or by access to the reader protocol.

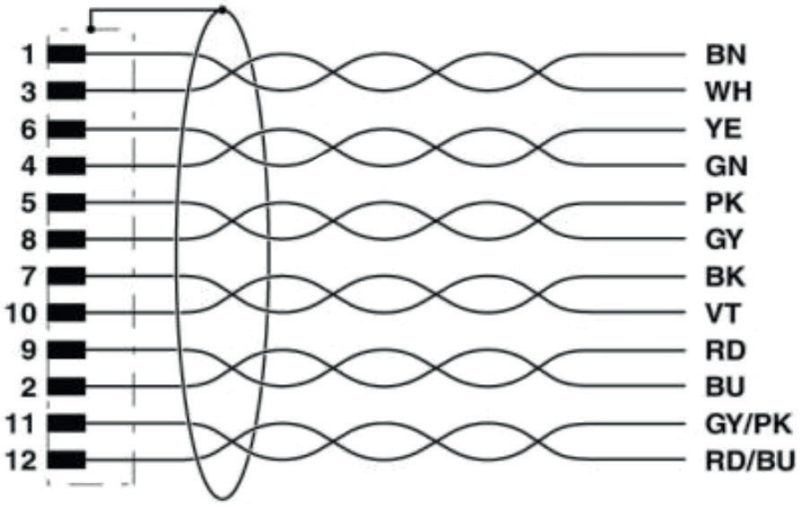

Fig. 25: Allocation of the GPIO interface cable

The digital inputs and outputs are provided via a 12-pin sockets in A-coding with M12 connection threads. The inputs are electrically isolated from the power supply of the reader and can be operated irrespective of the polarity of the input signal. For this reason, there is a common pin for the inputs (INP_CMN). The connection variants for the inputs are shown below.

If the electrical isolation is not required, the power to the input can also be supplied by the reader via pin 6 and 7 (see *GPIO, p. 30*).

The outputs are also DC-isolated from the power supply of the reader and have a common pin (OUT_CMN). If the electrical isolation is not required, the power supply can also be taken directly from the reader.

NOTICE

Risk of malfunction!

- ► Note that the load per channel is limited to a maximum of 0.5 A, and the total load across all the channels must not exceed 1.5 A. If the auxiliary voltage of the GPIO port of the reader is used, the load can be 1.1 A as a maximum. The inputs and outputs are designed for 30 V DC max.
- ► For further information, see the reader data sheet.
- ► Bear in mind that LPS or NEC Class 2 classified power supplied units can be used for the operation of the outputs.

ATTENTION

Risque de dysfonctionnement !

- ► Notez que la charge par canal est limitée à un maximum de 0,5 A et que la charge totale sur tous les canaux ne doit pas dépasser 1,5 A. Si la tension auxiliaire du port GPIO du lecteur est utilisée, la charge peut être de 1,1 A au maximum. Les entrées et sorties sont conçues pour 30 V DC max.
- ► Pour plus d'informations, voir la fiche technique du lecteur.
- ► Tenez compte du fait que les alimentations classées LPS (Limited Power Source, source d'alimentation limitée)) ou NEC classe 2 peuvent être utilisées pour le fonctionnement des sorties.

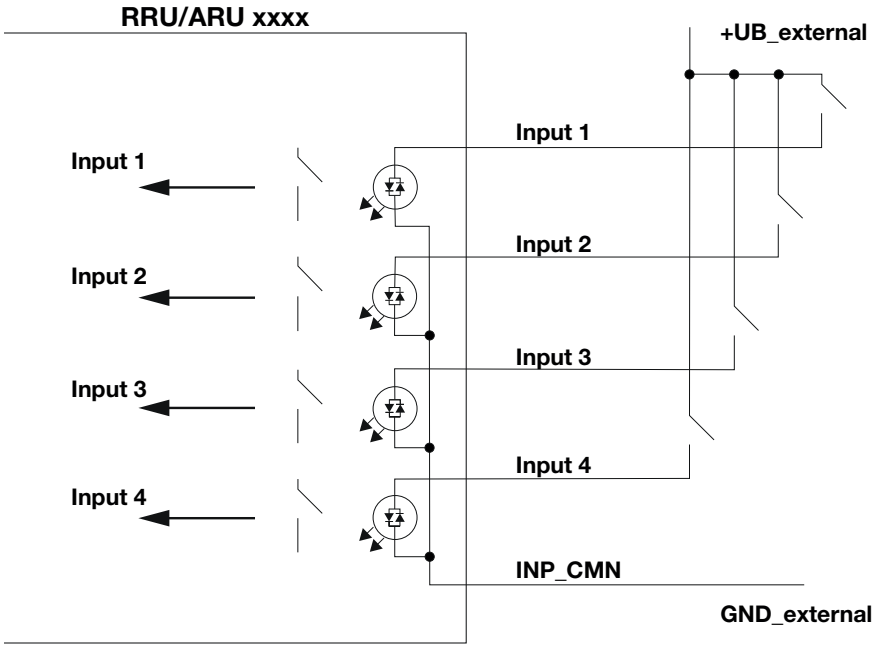

Fig. 25: DC-isolated inputs

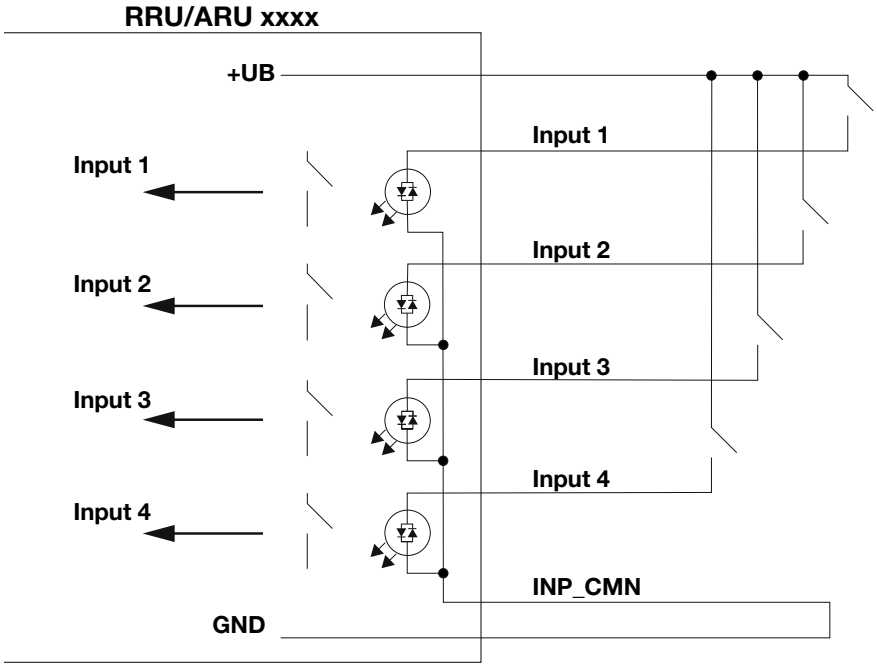

Fig. 27: Inputs, not DC-isolated

The connection examples for the outputs are shown in the next illustrations:

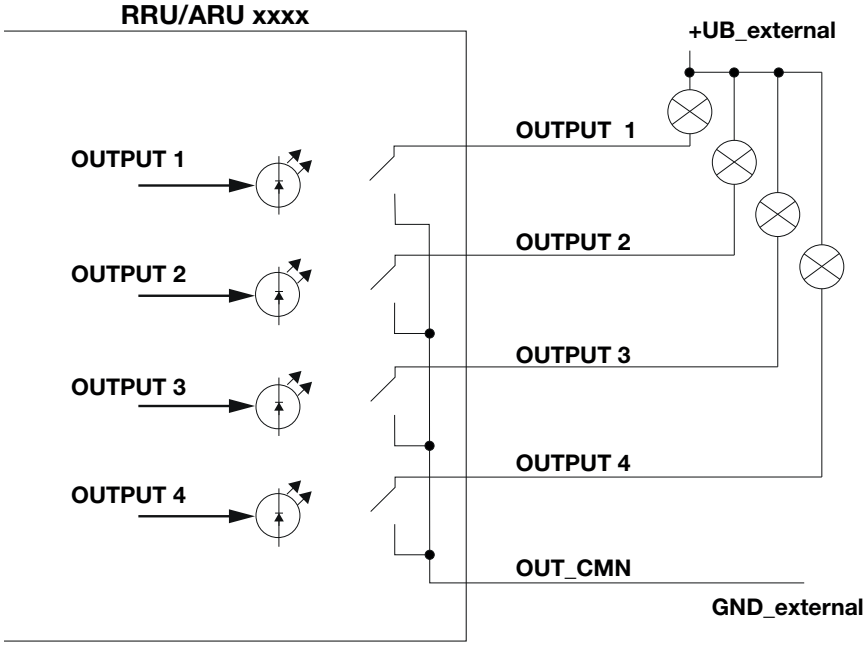

Fig. 26: DC-isolated outputs

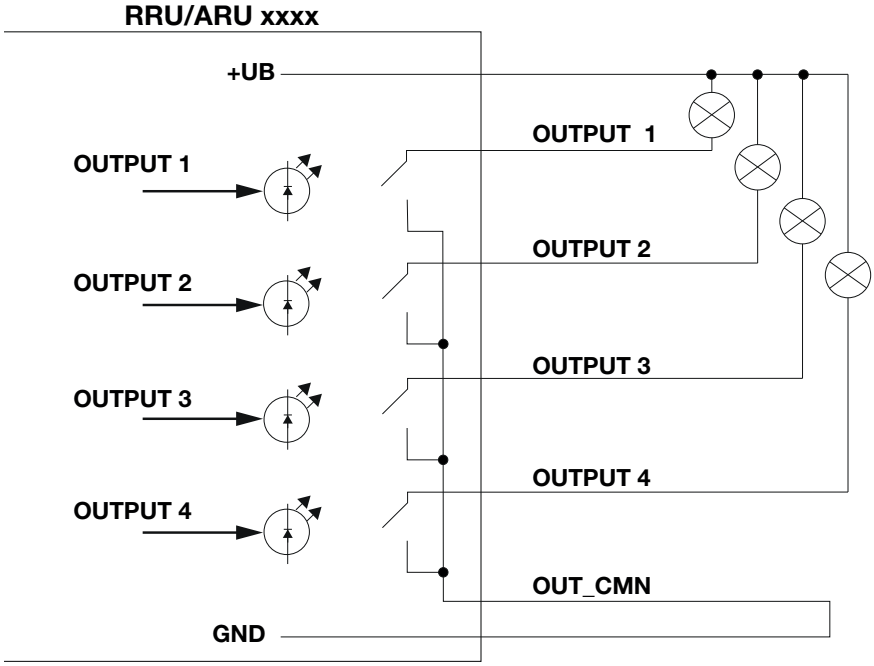

Fig. 28: Outputs, not DC-isolated

14.2 Connecting Digital Inputs and Outputs of the RRU 1400 and ARU 2400 Reader Directly

The activation and evaluation of the inputs and outputs is carried out using the *ReaderStart V3* software, with the DLL supplied or by access to the reader protocol.

Printed circuit board connector, 5-pole, screw connection with tension sleeve

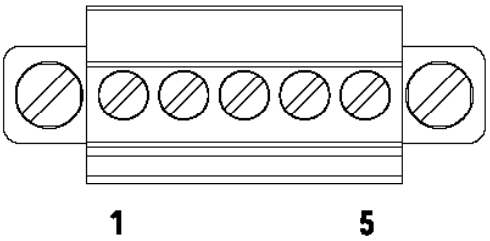

Pinout general purpose input output

Pin	Allocation
1	GND OUT_CMN
2	INPUT_1
3	INPUT_2
4	OUTPUT_1 (open drain)
5	OUTPUT_2 (open drain)

Fig. 29: Allocation of the GPIO interface cable

The digital inputs and outputs are provided via a printed circuit board connector, 5-pole with open screw connection with tension sleeve. It is possible to use an industrial isolated wire with a diameter of > 1mm².

The inputs are electrically isolated from the power supply of the reader. The outputs are also DC-isolated from the power supply of the reader and have a common pin (GND OUT_CMN).

NOTICE

Risk of malfunction!

- ► Note that the load per channel is limited to a maximum of 0.190 A. The inputs and outputs are designed for 30 V DC max.
- ► For further information, see the reader data sheet.

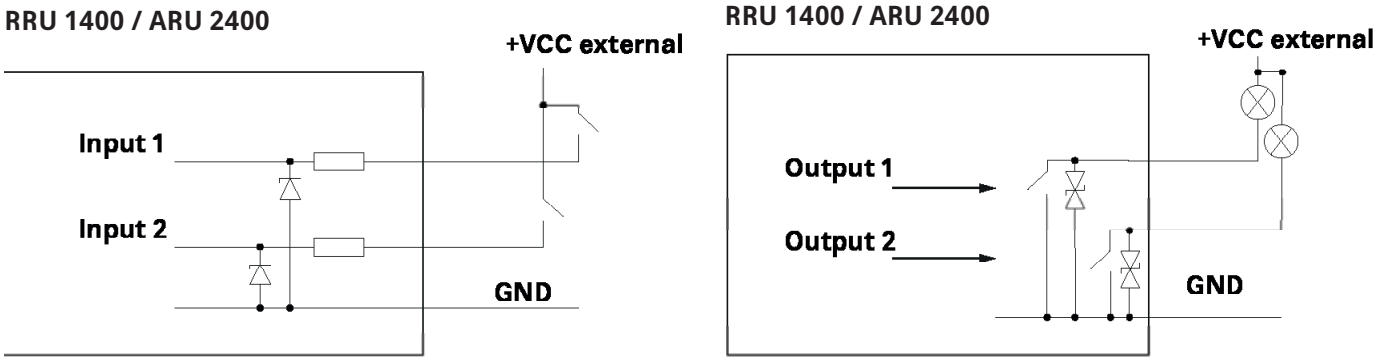

Fig. 30: Inputs and outputs, not DC-isolated

14.3 Connecting Digital Inputs and Outputs of the RRU 4xxx, ARU 3xxx, ARU 2400 and ARU 8500 Readers via the Connection Box

In addition to the direct connection of the readers (see *Connecting Digital Inputs and Outputs of the RRU 4xxx, ARU 3xxx and ARU 8500 Readers Directly, p. 51* and *Connecting Digital Inputs and Outputs of the ARU 2400 Reader Directly, p. 54*), it is possible to connect the readers using the connection boxes basis and acvanced. This connection type is recommended for connecting the readers in the outdoor applications or if there is a defined connection point. The objective of this connection point is to create a control panel for wiring all devices connected to the digital inputs and outputs of the reader and to provide a defined switch-off posibility for the DC supply of the reader.

14.3.1 Safety Instructions

WARNING

Danger to life from electric shock! Fire hazard!

Improper interventions in the device may jeopardise its electrical safety. Unauthorized changes to the unit and the use of spare parts and peripheral devices which are not sold or recommended by the manufacturer can result in fire, electric shock and injuries.

The manufacturer accepts no liability for accidents caused by the user opening or changing the device.

► Make sure that the connection of the area marked in ① in *Fig. 24* carried out by properly qualified and trained staff.

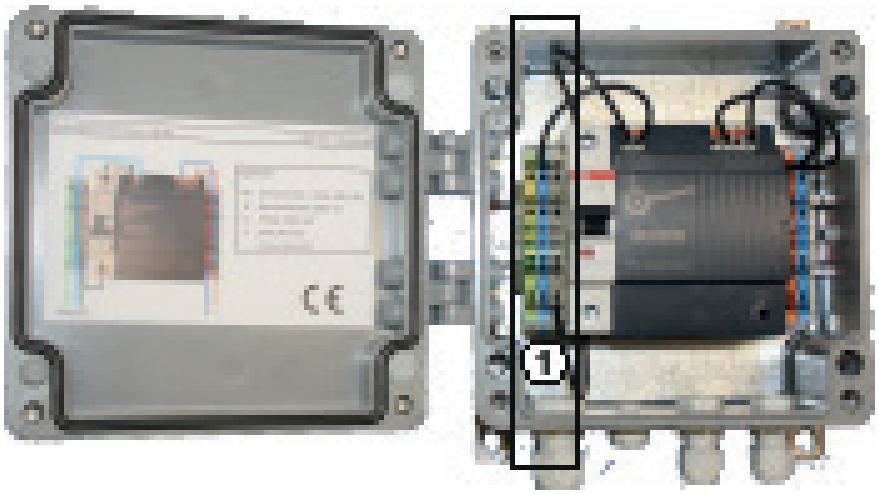

Fig. 31: Connection box, connections

14.3.2 Digital Inputs and Outputs

In addition to the information provided in *Connecting Digital Inputs and Outputs of the RRU 4xxx, ARU 3xxx and ARU 8500 Readers Directly, p. 51* and *Connecting Digital Inputs and Outputs of the ARU 2400 Reader Directly, p. 54*, this chapter describes the connection possibilities using the advanced connection box.

The activation and evaluation of the inputs and outputs is carried out using the *ReaderStart V3* software, with the DLL supplied or by access to the reader protocol.

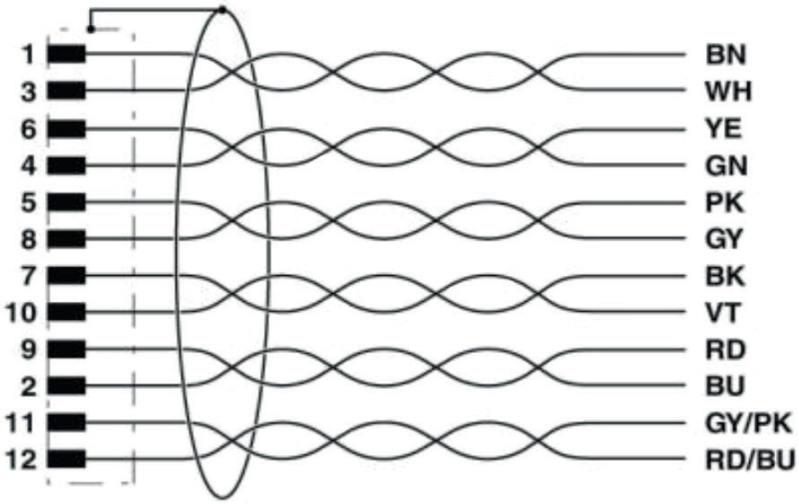

Fig. 32: Allocation of the GPIO interface cable

The digital inputs and outputs are provided via a 12-pin sockets in A-coding with M12 connection threads. The inputs are electrically isolated from the power supply of the reader and can be operated irrespective of the polarity of the input signal. For this reason, there is a common pin for the inputs (INP_CMN). The connection variants for the inputs are shown below.

If the electrical isolation is not required, the power to the input can also be supplied by the reader via pin 6 and 7 (see *GPIO, p. 30*).

The outputs are also DC-isolated from the power supply of the reader and have a common pin (OUT_CMN). If the electrical isolation is not required, the power supply can also be taken directly from the reader.

NOTICE

Risk of malfunction!

- ► Note that the load per channel is limited to a maximum of 0.5 A, and the total load across all the channels must not exceed 1.5 A. If the auxiliary voltage of the GPIO port of the reader is used, the load can be 1.1 A as a maximum. The inputs and outputs are designed for 30 V DC max.
- ► For further information, see the reader data sheet.
- ► Bear in mind that LPS or NEC Class 2 classified power supplied units can be used for the operation of the outputs.

ATTENTION

Risque de dysfonctionnement !

- ► Notez que la charge par canal est limitée à un maximum de 0,5 A et que la charge totale sur tous les canaux ne doit pas dépasser 1,5 A. Si la tension auxiliaire du port GPIO du lecteur est utilisée, la charge peut être de 1,1 A au maximum. Les entrées et sorties sont conçues pour 30 V DC max.
- ► Pour plus d'informations, voir la fiche technique du lecteur.
- ► Tenez compte du fait que les alimentations classées LPS (Limited Power Source, source d'alimentation limitée)) ou NEC classe 2 peuvent être utilisées pour le fonctionnement des sorties.

The connection examples for the inputs are shown in the next illustrations:

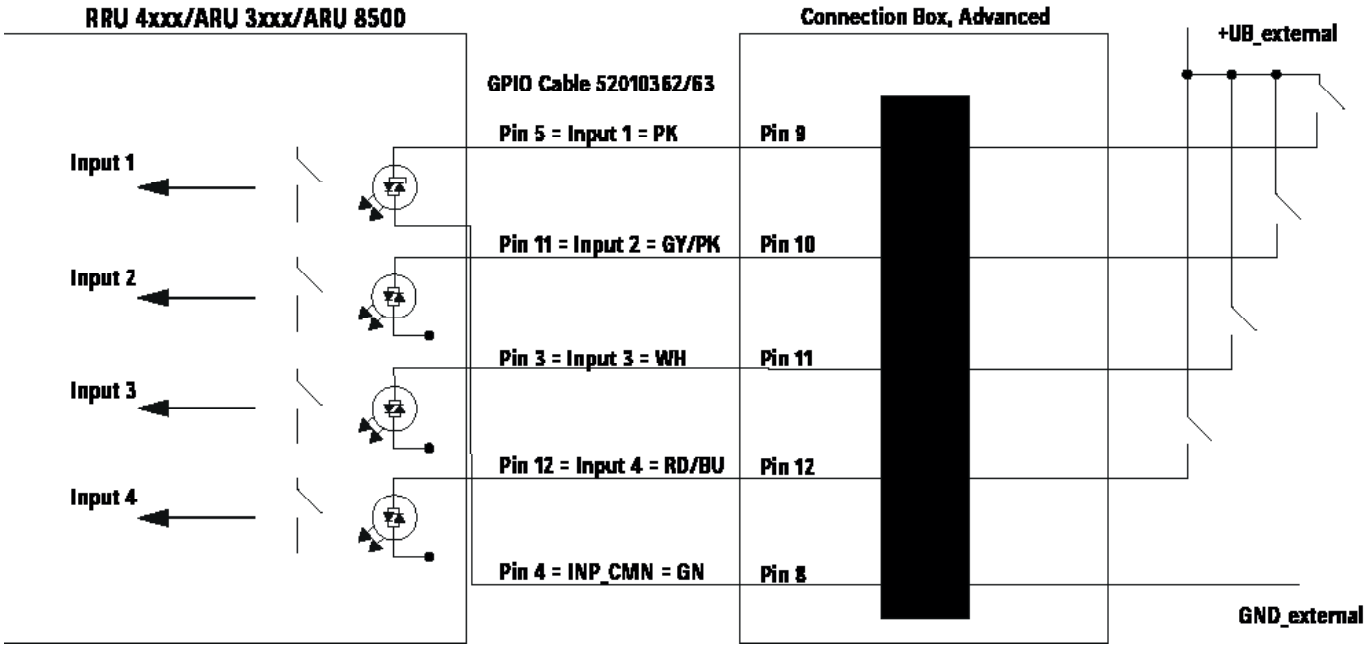

Fig. 33: DC-isolated inputs

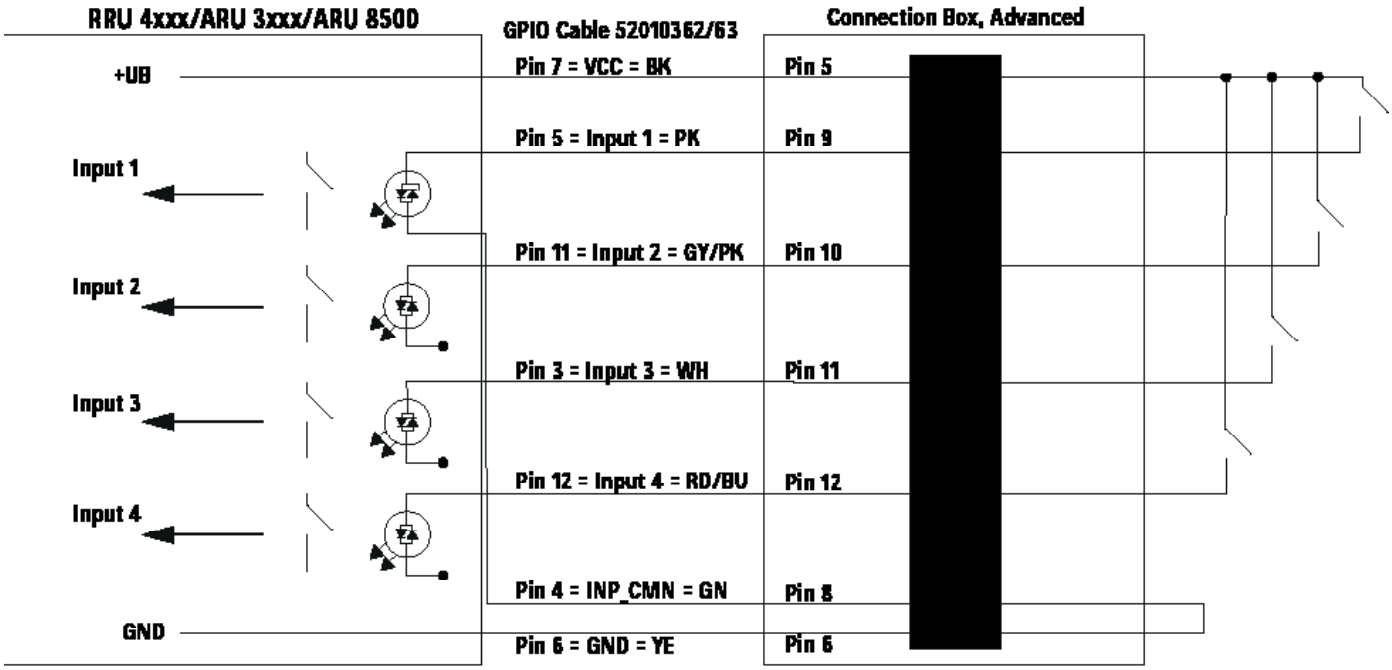

Fig. 34: Inputs, not DC-isolated

The connection examples for the outputs are shown in the next illustrations:

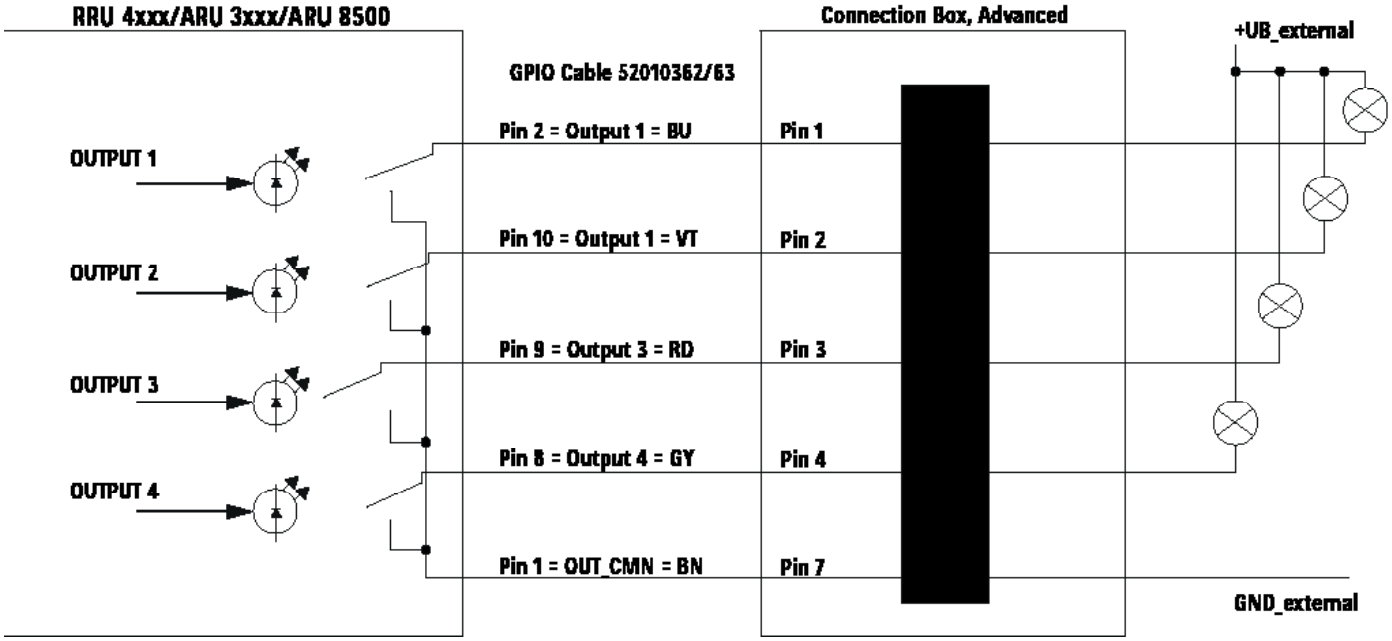

Fig. 35: DC-isolated outputs

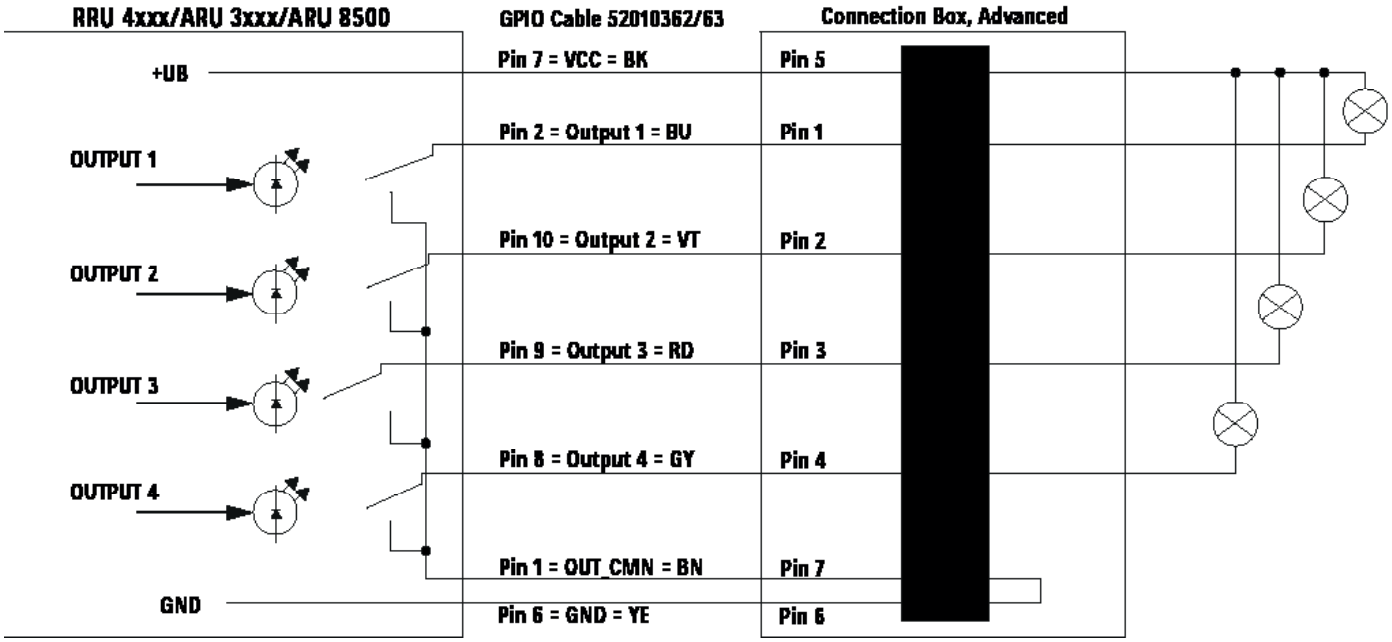

Fig: 36: Outputs, not DC-isolated

14.3.3 Connecting the Reader to the Power Supply

Using the basic and advanced connection boxes, it is possible to connect all the readers to the DC supply. This connection type is recommended in particular when using the readers outdoors or if there is a defined switch-off point. The following description is applied both for the basic and the advanced connection box. If it is only necessary to have the DC supply, it is possible to use the basic connection box. In case both the DC supply and the control panel for all the connected devices is necessary, the advanced connection box is required.

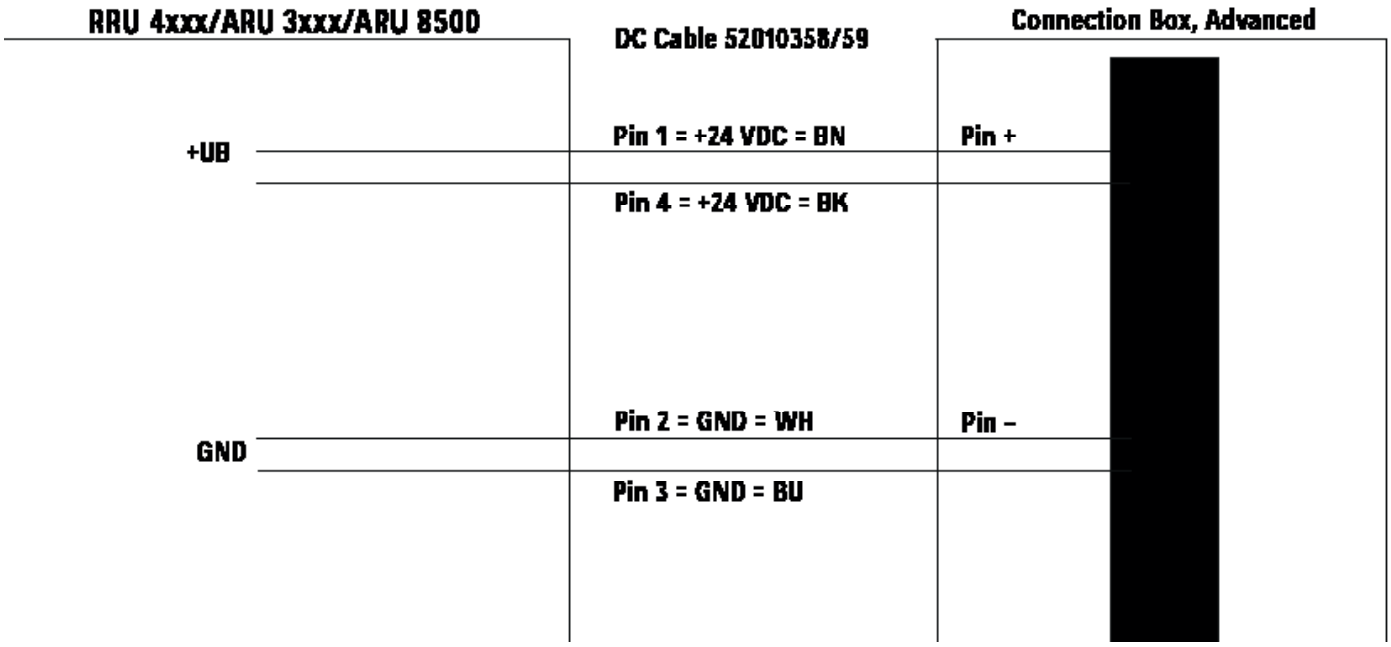

Fig. 37: DC connection

14.4 Connecting the Antenna

NOTICE

Risk of malfunction!

When using a cable not suitable for the impedance of 50 Ohm, the performance of the reader will be severely limited by the mismatch. If the mismatch is large, the reader may indicate a fault.

► Only use cable suitable for the impedance (50 Ohm).

For the connection to the RFID antennas, the RRU 4xxx/ARU 3xxx readers have four antenna connections that are of the reverse TNC design.

► Only use the cable from the accessories list or an equivalent cable for this connection.

For the connection to the RFID antennas, the ARU 2400 reader has three antenna connections that are of the FAKRA design.

► Only use the cables from the accessories list or an equivalent cable for this connection.

14.5 Turning the Reader On and Off

► Connect the reader to the power supply via a *PWR* or to a PoE source according to the 802.3at standard via *LAN / POE* input.

☒ The reader is on.

14.6 Reading the PWR LED Indications

The reader has a 2-colour LED for the indication of the operating state. The table below shows the colours used and the related operating state:

LED	Action	Meaning
yellow	on	the unit is booting
green yellow	on flashing approx. every 8 seconds	unit is on, normal operation with heartbeat
yellow green	on flashing approx. every 8 seconds	error during booting

Tip The ARU 3xxx readers have additional 4 LEDs (green/red/red/green) in the antenna cover which can be controlled by means of the software.

15 Operating *ReaderStart* Software

The reader can be operated using the *ReaderStart* software. The software provides all the necessary functionality of the reader for a test in a real environment. As an aid to configuration, various basic settings for application scenarios are available.

► For the current version of the *ReaderStart*, go to our support portal at https://support.kathrein-solutions.com/.

15.1 System Requirements

To ensure correct operation using the software on your PC/laptop, your PC/laptop should meet the following minimum requirements:

Processor	X86-compatible
Memory	512 MB RAM
Operating system	Windows 7 or higher
Free hard disk memory for:	
32-bit operating system	850 MB (including Microsoft .Net Framework 4)
64-bit operating system	2 GB (including Microsoft .Net Framework 4)

15.2 Installing the Software

Tip

The setup and the *ReaderStart* software might look different, depending on the operating system and the software version. The following images show the installation of the *ReaderStart V3*.

During the installation, it is checked whether the necessary requirements for the installation are met, i.e. whether all the dependencies, such as the necessary Windows Service Packs, the .NET Framework in the respective version together with the C++ redistributables are installed. If this is the case, the software and the DLL for controlling the reader are installed.

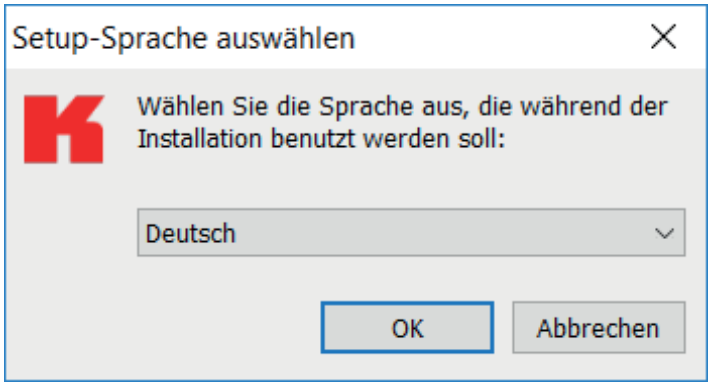

1. Download the ReaderStart software at https://support.kathrein-solutions.com.
2. Extract the downloaded zip file.
3. Double-click on the ReaderStart_v3_Setup.exe file.
   ⇨The following screen with the option to select the language used during the installation appears.
4. Select a language between *German* and *English*.

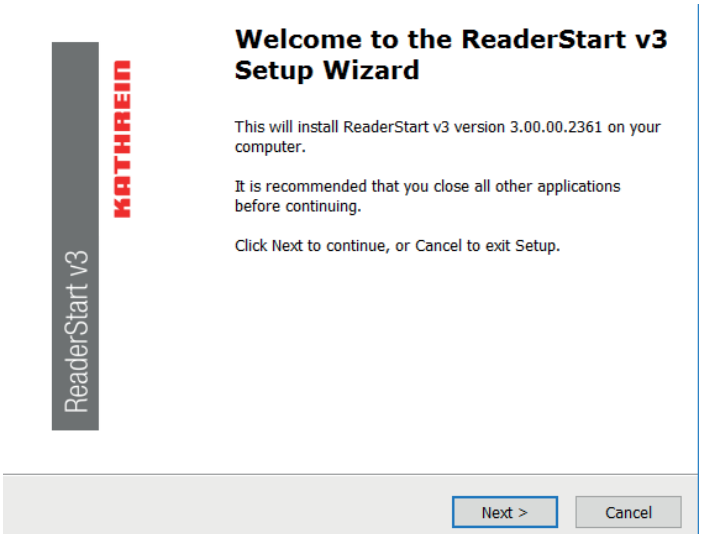

5. Click *OK* to confirm the selection.
6. The screen on the left appears. It shows additional information on the exact version of the *ReaderStart* software.

> **Tip** After the *ReaderStart* software has been installed, it is possible to access this information in the *Info* drop-down menu in the task bar.

7. Click on *Next* to continue or *Cancel* to exit the setup.

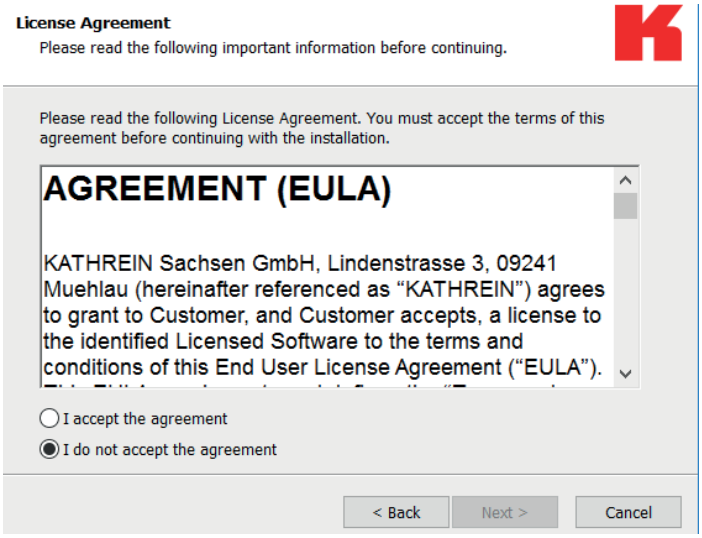

⇨The screen on the left with the licence agreement appears.

8. Select *I accept the agreement* to continue

   or

   I do not accept the agreement to exit the setup.

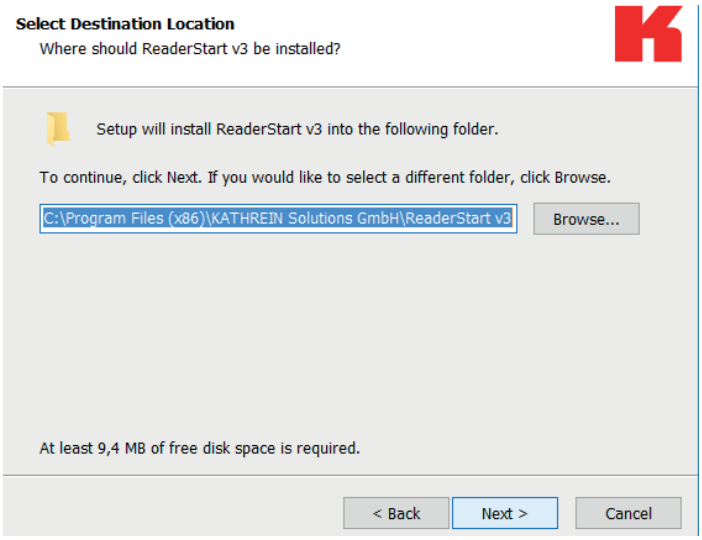

⇨If you have accepted the license agreement in Step *7*, the window on the left appears.

9. Select the destination file for the software to be installed.

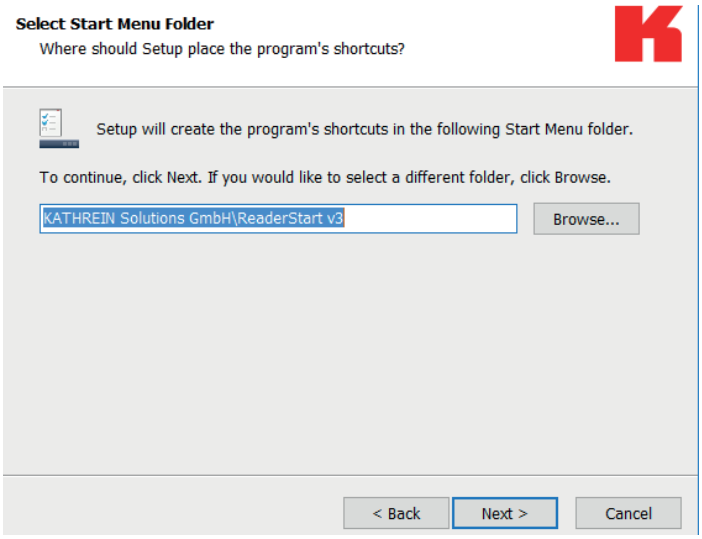

10. Click *Next*

    ⇨The screen on the left appears. The standard settings are displayed. It is possible to customise the folder in the Windows start menu.

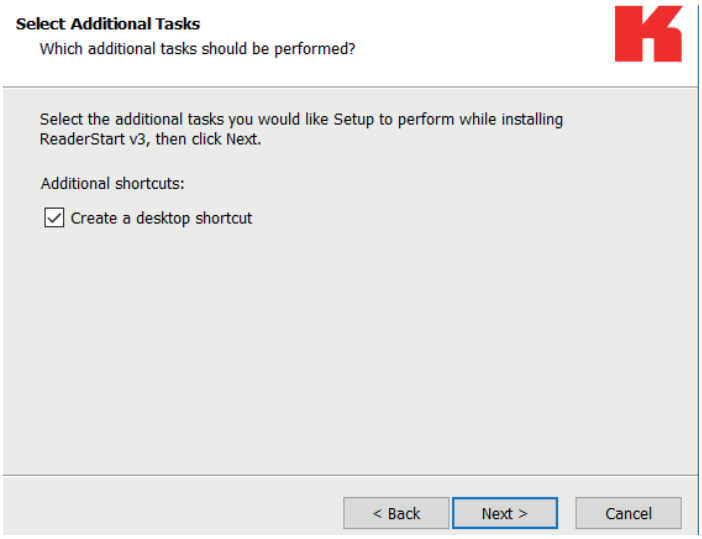

12. Click *Next.*

    ⇨The screen on the left appears.

13. Tick the box *Create a desktop icon* if you would like to include the icon in the Windows Quick Launch/on the desktop. The default setting is to create no icons.

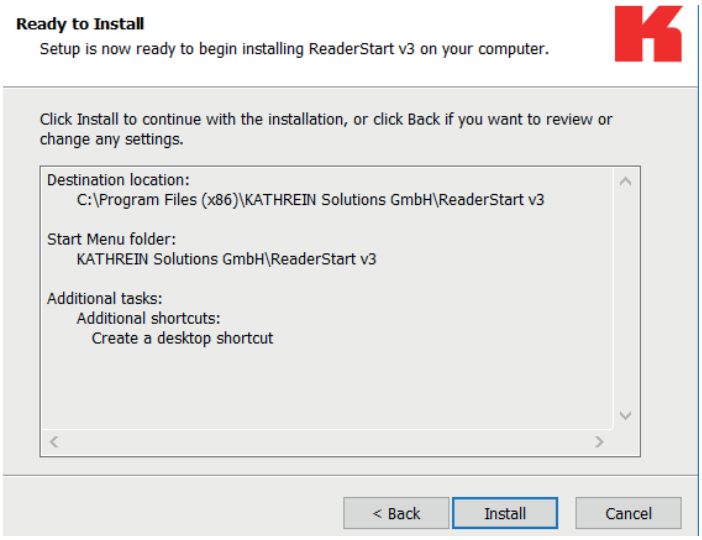

14. Click *Next.*

    ⇨The summary of all the installation tasks appears.

15. Click *Install* to start the installation.
16. If during the installation the software requests to restart the computer, do so.

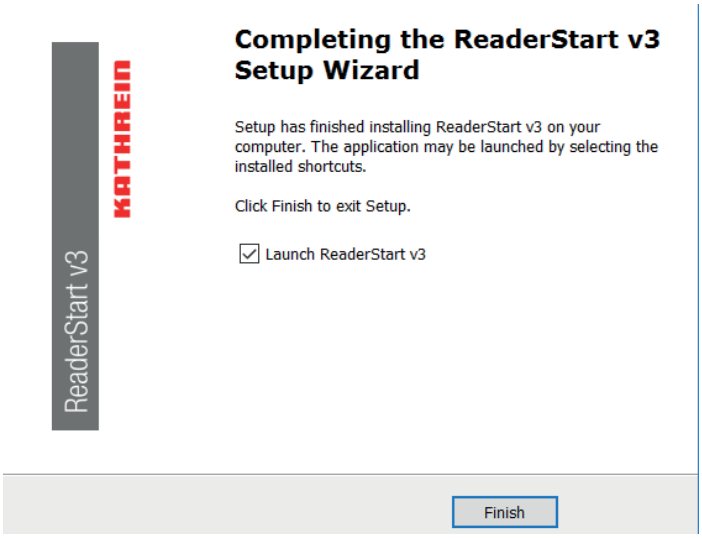

⇨If the *ReaderStart* has been installed, the screen on the left appears.

17. If you do not want to start the programme immediately, uncheck the *Launch ReaderStart v3* box. Otherwise, the programme will automatically start once clicking on *Finish*.

15.3 Connecting the Reader in the *ReaderStart* Software

15.3.1 Requirements

From reader firmware version 2.04, the reader in the ex-works condition has the IP address *192.168.0.1* and the network mask *255.255.255.0*. Earlier reader firmware versions are configured for DHCP.

► To integrate the reader into a corporate network, contact your administrator so that he can allocate you a spare IP address and assign the correct network mask.

Alternatively, it is possible to configure the reader to obtain an IP address automatically. For this service, referred to as DHCP, it is necessary to have an appropriate DHCP server operating in the network.

► For more information, contact your network administrator.

► Make sure that the IP addresses of the control computer and the reader are in the same IP range but are not the same. Ensure that the network mask is identical.

Establishing the Connection to the Reader

There are two ways to establish the connection to the reader:

- by entering the IP address to communicate directly with the reader; see *Establishing the Connection via an IP Address* or
- by using the reader's host name; see *Establishing the Connection Using a Host Name, p. 65*.

► Start the programme.

⇨The splash screen is shown until all the necessary DLLs have been loaded in the background (see figure on the left).

⇨After that, the user interface appears. It consists of the menu bar, the tabs and the status field:

Fig. 38: Establishing connection to the reader

Establishing the Connection via an IP Address

1. Click the *IP address* field (① in *Fig. 31*).
2. Enter the IP address.

Establishing the Connection Using a Host Name

1. Click the *Name* field (② in *Fig. 31*).
2. Enter the host name of the reader.
   If you do not know the name of the reader, click *Search for Readers*.
   ⇨The readers found in the network are shown with their names, see ⑤ in *Fig. 32*.

Tip ► To allow only secure SSH connection with an encrypted transmission to the reader, check the box next to the lock symbol (④ in *Fig. 31*); see also *Establishing a Secure Connection, p. 83*.

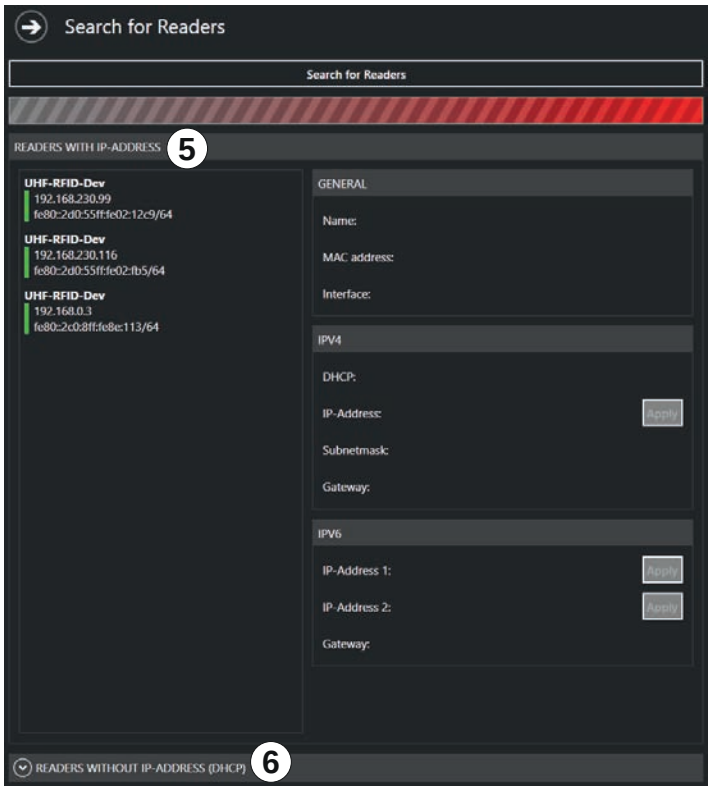

Fig. 39: Establishing connection to the reader: search for readers

! The following steps describe establishing the connection for readers with an IP address.

3. In the *Ethernet* block, click *Search for Readers* (③ in *Fig. 31*).
   ⇨The screen on the left appears.
4. Select a reader under *Readers with IP Address* (⑤ in the figure on the left).
5. If there have been 2 or more DHCP requests sent by the reader, the *Readers without IP Address (DHCP)* field (⑥) is expanded. Then it is possible to assign the IP address to the reader.

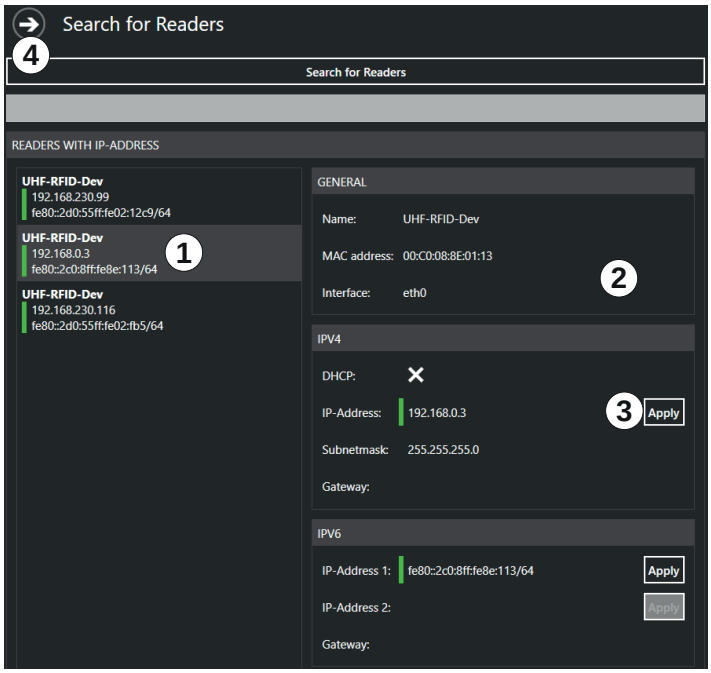

⇨The view on the screen changes. The selected reader has a grey background (① in the figure on the left) and on the right (②), the properties of the reader are shown.

6. To close this pop-up screen, click *Apply* (③) or on the arrow (④).

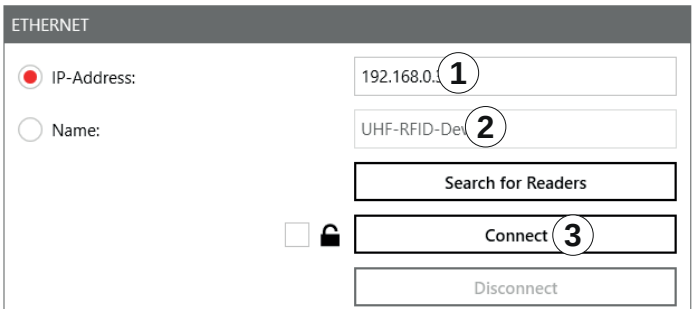

⇨The user interface returns to the main view. In the *Ethernet* block, the IP address (① in the figure on the left) and the reader type (②) are shown.

7. Click *Connect* to connect the reader.

⇨In the *Ethernet* block, the *Search for Readers* and *Connect* buttons are greyed out. It is possible to disconnect the reader by clicking *Disconnect* (① in the figure below). The *Communication Configuration Linux Module* (②) and status messages from the reader/programme are shown in the status field (③).

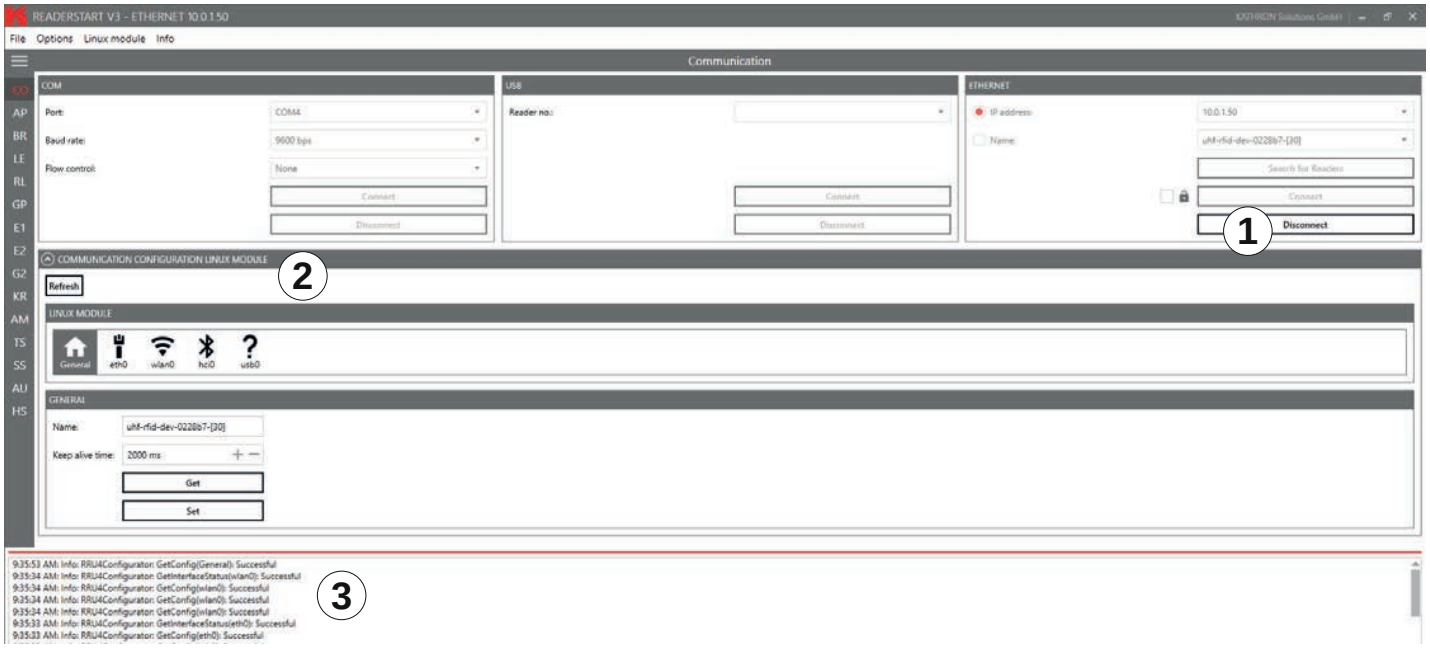

15.4 Navigating in the *ReaderStart* User Interface

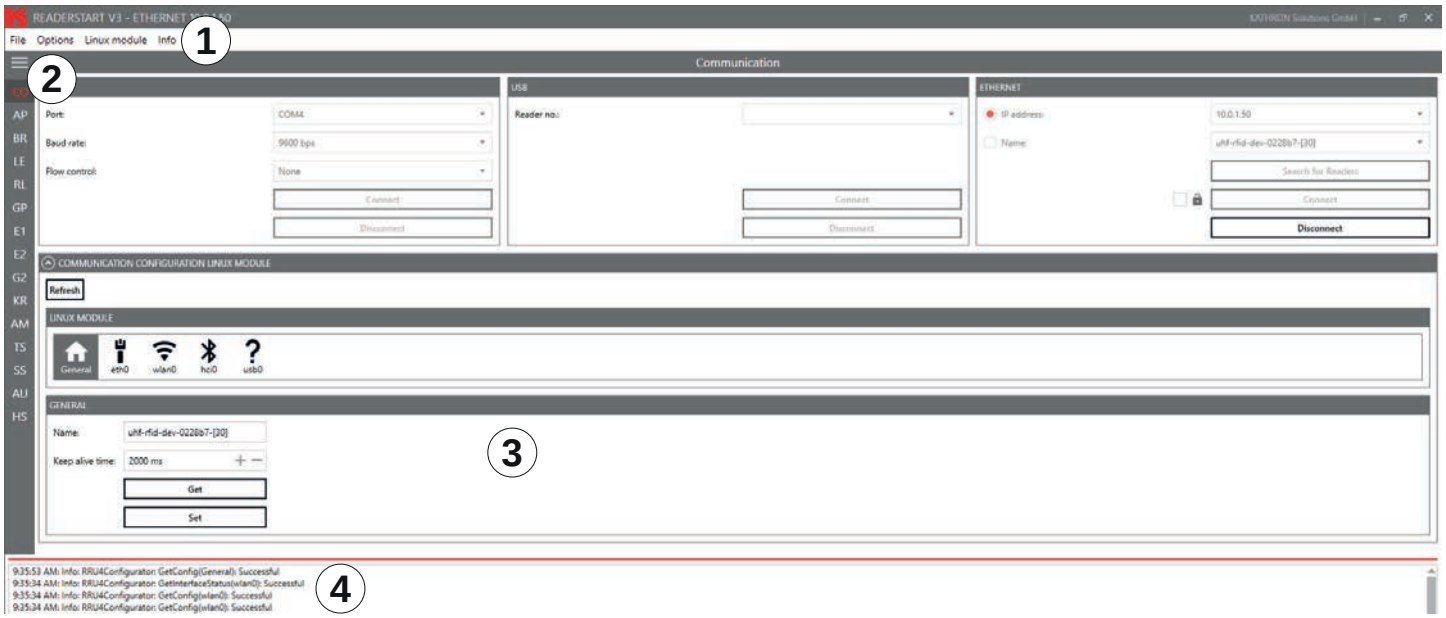

Fig. 40: *ReaderStart* user interface

The user interface of the *ReaderStart* consists of the following sections:

- menu bar (①); see *Menu Bar, p. 67;*
- settings and controls for the reader, divided into individual functional groups and situated under different tabs (②) and the contents of the tab (③), displayed in the central part of the screen; see *Operating the Reader Using the ReaderStart Software, p. 82,*
- status field containing messages from the reader and the program (④); see *Status Field, p. 81*

Tip The contents of the tabs are considerably large and are, therefore, described in a separate chapter; see *Operating the Reader Using the ReaderStart Software, p. 82.*

15.4.1 Menu Bar

By means of the menu bar, it is possible to customise the programme to the user's requirements.

File

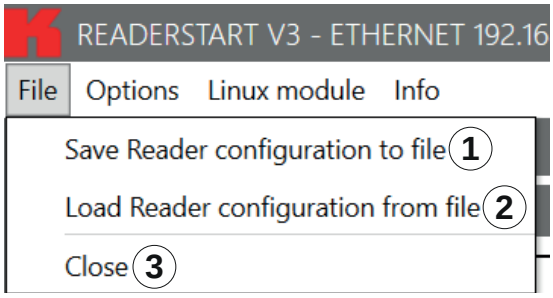

Fig. 41: Menu bar: file

①	*Save reader configuration to file*	saves reader configuration in an XML file
②	*Load reader configuration from file*	loads reader configuration from a previously saved XML file
③	*Close*	closes *File*

Saving Reader Configuration to File

There is a wide variety of parameters available for configuring the RF front end. It is possible to save the complete setting as a parameter set in an XML file under *File* ⇨ *Save reader configuration to file* and to load it later.

► Under *FIle*, click *Save reader configuration to file.*

⇨The following window appears:

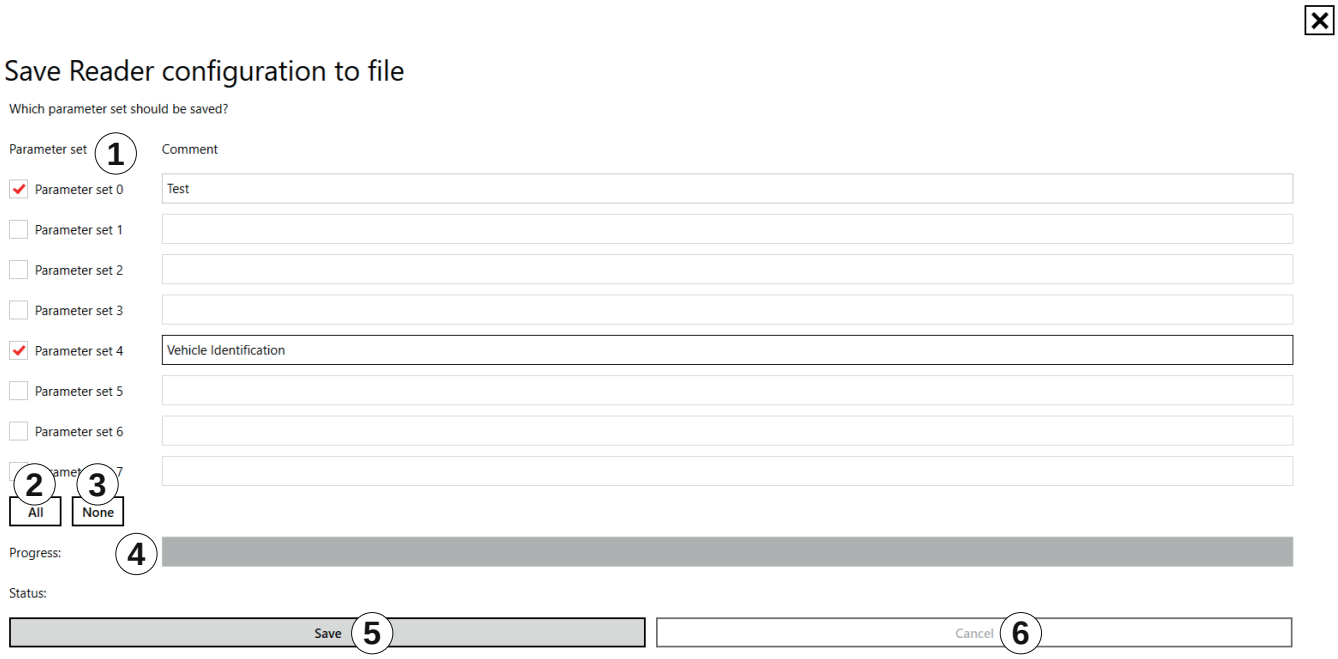

Fig. 7: File: save reader configuration to file

①	*Parameter set*	all available parameter sets from 0–7 ► Click the check box to select or unselect the parameter set. ⇨The selected parameter set is marked with a tick. If the parameter is not selected, the check box is empty.
②	*All*	selects all parameter sets from 0–7
③	*None*	unselects all parameter sets from 0–7
④	*Progress*	shows the progress of the save operation by means of the progress bar; see also *Save, p. 69*

⑤	*Save*	opens a pop-up window to select the directory in which the configuration file in the XML format will be saved and the file name for it To save reader configuration to file: ✓ The parameter sets have been selected/unselected and described. 1. Click *Save*. ⇨A dialogue appears. 2. Select the file name and the directory in which the configuration file will be saved. 3. Click *OK*. ⇨The progress bar (④) shows the progress of the save operation: 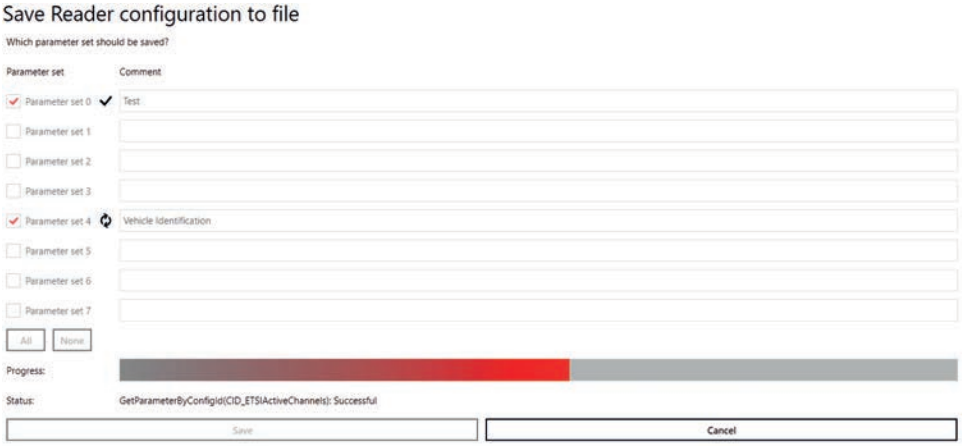 ⇨After the file has been saved, a pop-up message *Save reader configuration to file Saving done* appears. 4. Click *OK* to close the pop-up message. ⇨The software returns to the view shown in *Fig. 35, p. 68*. 5. Click the *X* at the top right-hand corner or press *Escape* on your PC keyboard to leave the dialogue.
⑥	*Cancel*	cancels the saving process

Loading Reader Configuration from File

▶ Under *FIle*, click *Load reader configuration from file.*

⇨The following window appears:

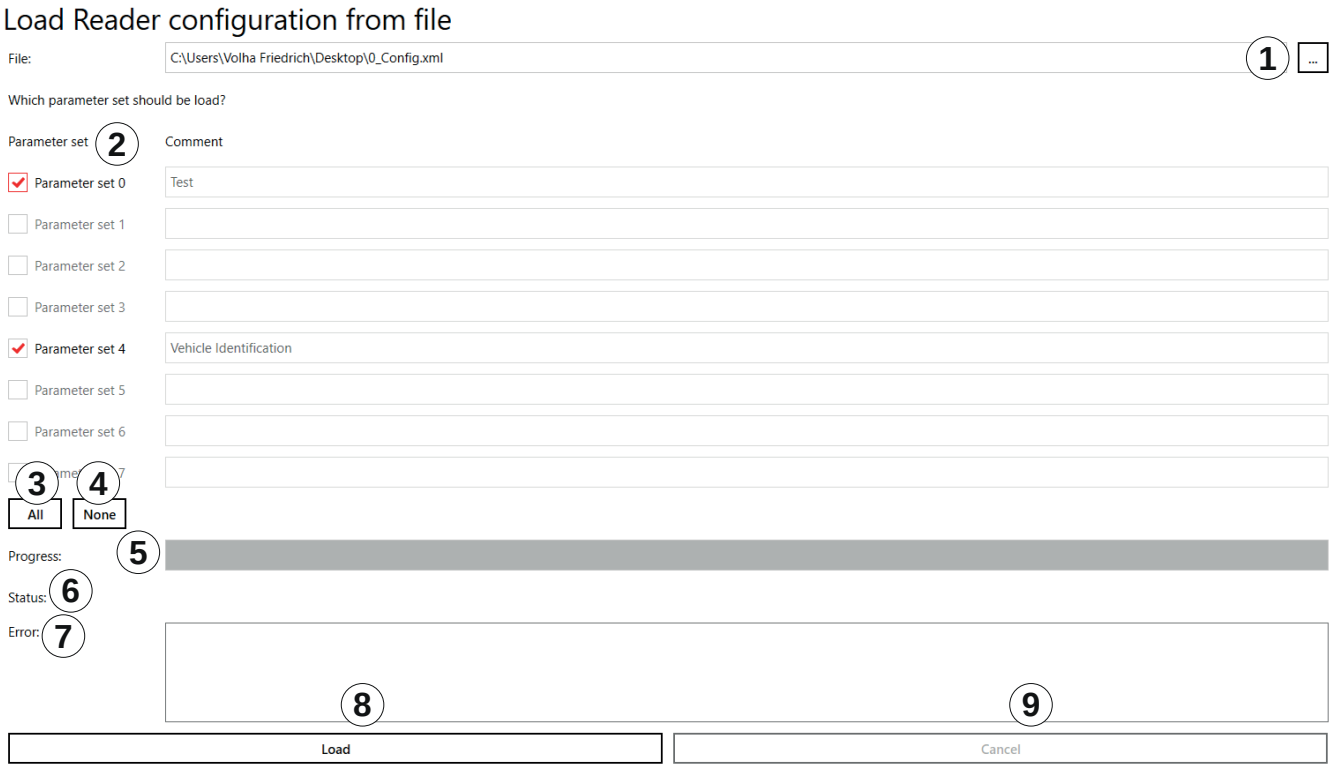

Fig. 42: File: load reader configuration from file

①	*File*	opens a dialogue to select the configuration file To load reader configuration to file: 1. Click *File* (④ in *Fig. 36*). ⇨A dialogue appears. 2. Select the directory and the configuration file from which the parameter sets will be loaded. 3. Click *Open*. ⇨The parameter sets saved in the configuration file are loaded and are marked with a red tick. ⇨The progress bar (⑤) shows the progress of the save operation.
②	*Parameter set*	see *Parameter set, p. 68*
③	*All*	see *All, p. 68*
④	*None*	see *None, p. 68*
⑤	*Progress*	shows the progress of the load operation by means of the progress bar
⑥	*Status*	shows the status of the SetParameterByConfigID parameter
⑦	*Error*	shows errors in the SetParameterByConfigID parameter

⑧	*Load*	loads the selected parameter sets to the reader ✓ The parameter sets to be loaded have been selected/unselected. 1. Click *Load*. ⇨The progress bar (④) shows the progress of the save operation: 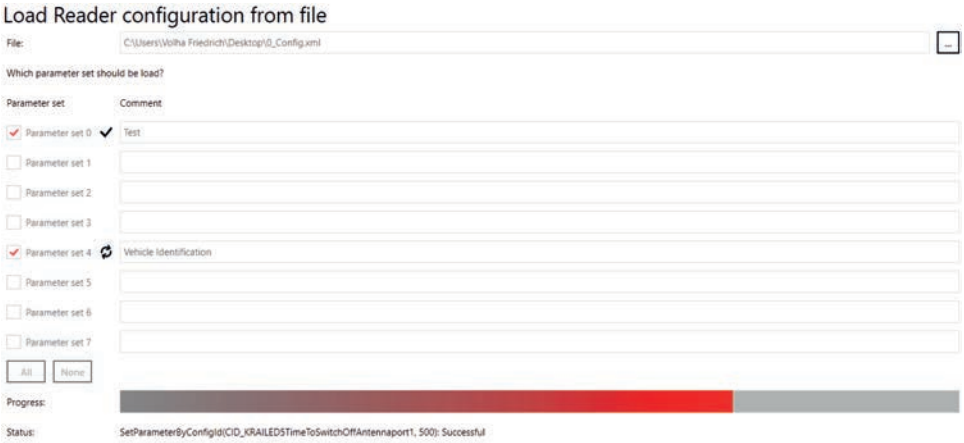 ⇨After the configuration has been loaded, a pop-up message *Load reader configuration from file Loading done* appears. 2. Click *OK* to close the pop-up message. ⇨The software returns to the view shown in *Fig. 36, p. 72*. 3. Click the *X* at the top right-hand corner or press *Escape* on your PC keyboard to leave the dialogue.
⑨	*Cancel*	cancels the loading process

Close

► Click *Close* to close the *ReaderStart*.

Options

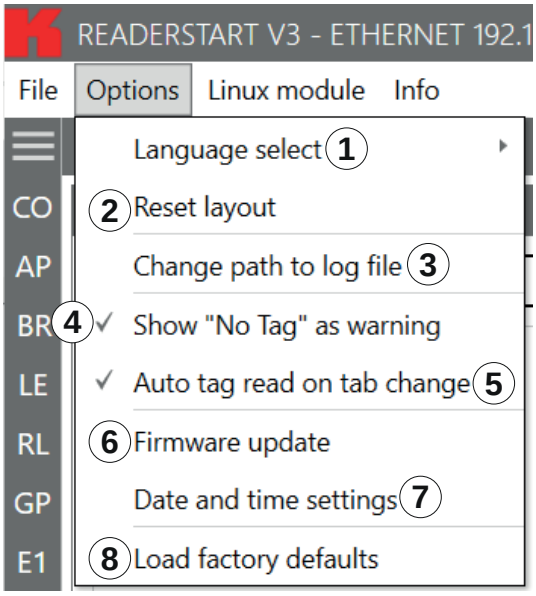

Fig. 43: Options

①	*Language select*	selects the user interface language between *English/German/Spanish/French* 1. Click *Language select* (① in *Fig. 37*). ⇨The four languages are shown. The language applied in the user interface is marked with a tick. 2. Click on the desired language. ⇨A pop-up message appears: *Question. Please restart the programme to apply changes. Restart now?* 3. Click *Yes* to restart the programme and change the language or Click *No* to cancel the changes. ⇨If you have pressed *Yes*, the programme restarts and the language of the user interface has been changed.
②	*Reset layout*	resets the sequence of the tabs to default settings and reduces the size of the programme to the window size
③	*Change path to log file*	opens a dialogue to create a new folder/select a new directory to save logs
④	*Show "No Tag" as warning*	activates or deactivates the warning (yellow) in the status field if no tag has been detected in the antenna field; see *Status Field, p. 81* If this parameter is not checked, the absence of the tag is shown as error (red) in the status field; see *Status Field, p. 81*
⑤	*Auto tag read on tab change*	activates or deactivates reading tags after the tab change
⑥	*Firmware update*	updates the reader firmware; see *Updating Firmware, p. 73*
⑦	*Date and time settings*	sets date, time and time zone on the reader; see *Changing Date and Time Settings, p. 74*
⑧	*Load factory defaults*	loads factory default settings onto the reader; see *Loading Factory Default Settings, p. 75*

Updating Firmware

1. Click *Firmware update*.

   ⇨A dialogue appears. ① shows the current firmware version.

   Firmware update

   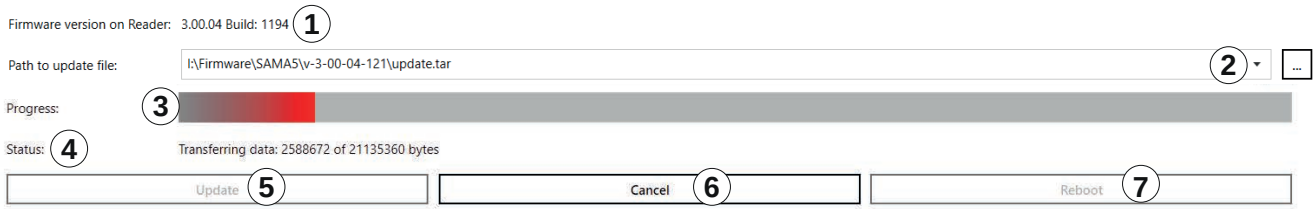

2. Click on the box at *Path to update file* (②).

   ⇨A dialogue opens to select the file with the current firmware.

3. Having selected the update file, click *Update* (⑤).

   ⇨The reader firmware is being updated. The update progress is shown by means of the progress bar (③). The status (④) shows what the software is currently performing, e.g. *Preparing*, *Transferring data: 2588672 of 211353360 bytes*, *Flashing* .

   Click *Cancel* (⑥) to stop the update process.

4. After the update has been completed, click *Reboot* (⑦) to restart the reader.

Changing Date and Time Settings

The reader has an integral clock which can deliver the time stamp for a tag operation. It is possible to set the clock using *Date and time settings* under *Options* in the menu bar. When this menu item is opened, it automatically reads the current date and time from the reader and compares this with the date and time from the host computer. The date and time of the host computer can now be loaded to the reader by pressing the *Set system date and time on Reader* button.

1. Click *Date and time settings*.

   ⇨A dialogue appears. It automatically reads the current date and time from the reader (③ and ④) and compares them with the date and time from the host computer (①).

Date and time settings

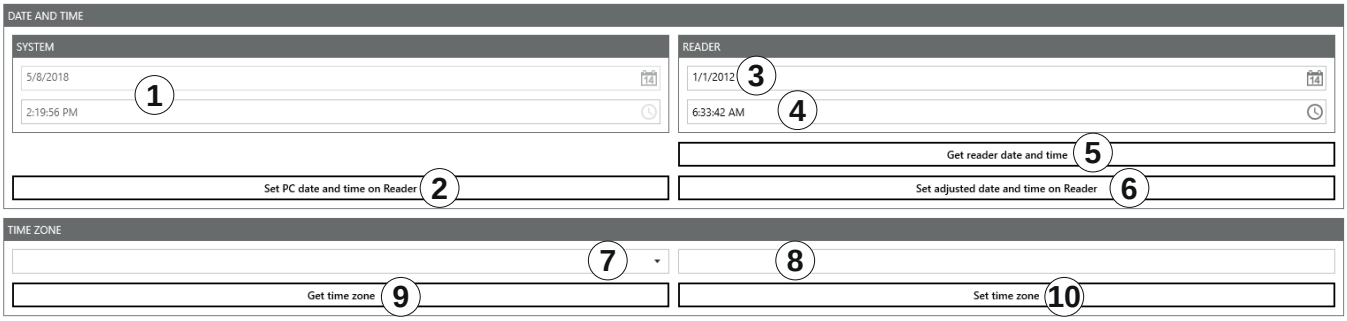

Status: RRU4Configurator: GetTimeZone: Successful

①	Date and time of the *ReaderStart* software	shows the date and time of the *ReaderStart* software; cannot be changed
②	*Set PC date and time on reader*	loads the system date and time shown in ① onto the reader
③	Current date of the reader	shows the current date of the reader 1. To change the reader's date, either type the new date into the line or click on the calender symbol in the line and select the date. 2. Click *Set adjusted date and time on reader*.
④	Current time of the reader	shows the current date of the reader 1. To change the reader's time, either type the new time into the line or click on the clock symbol in the line and select the time. 2. Click *Set adjusted date and time on reader*.
⑤	*Get reader date and time*	reads the current date and time from the reader and displays them in ③ and ④
⑥	*Set adjusted date and time on reader*	sets the adjusted date and time on reader; see ▯ and ▯
⑦	Time zone selection	selects the time zone 1. Click on the drop-down menu symbol (⑦). 2. Select the continent and the city. ⇨The time zone is displayed at (⑧).
⑧	*Get time zone*	reads the time zone currently set in the system
⑨	*Set time zone*	sets the time zone selected at ⑦

Loading Factory Default Settings

1. Click *Load factory defaults*.
   ⇨A pop-up message appears: *Are you sure to load factory defaults?*
2. Click *Yes* to load factory default settings or
   Click *No* to cancel the operation.

Linux Module

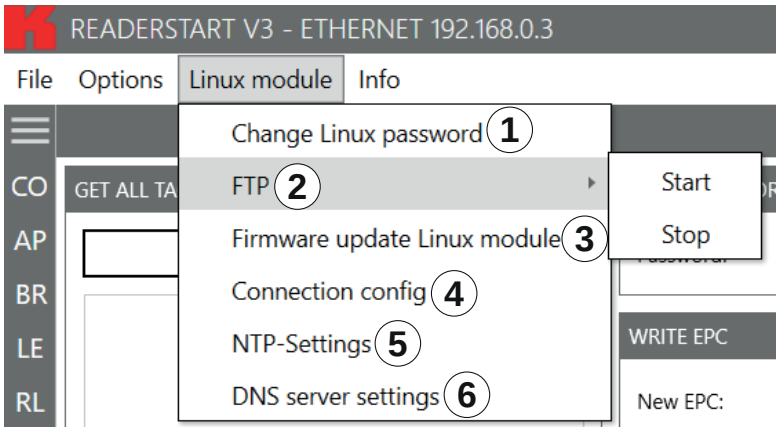

①	*Change Linux password*	changes the Linux password 1. To change the password, click *Change Linux password*. ⇨The following pop-up window appears: 2. Type in the old password. 3. Type in the new password. 4. Confirm the new password. 5. Click *OK* to change the password or Click *Cancel* to stop the process.
②	*FTP*	*Start* starts FTP server
		Stop stops FTP server
③	*Firmware update Linux module*	updates Linux module firmware ► Proceed as described in *Updating Firmware, p. 73*. Make sure to select the file to update the Linux module firmware at *Path to update file* (②). 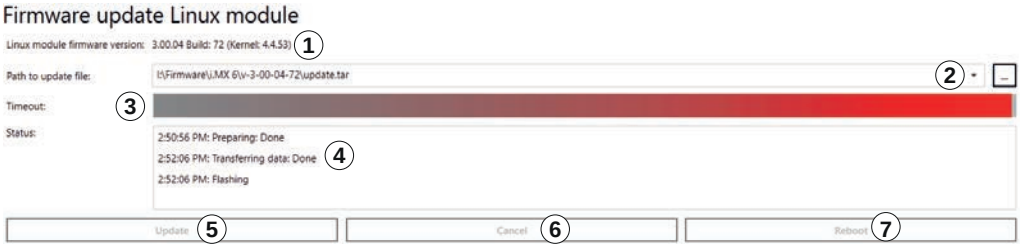

④	*Connection config*	configures the secure connection and the backward compatibility Connection config Allow only secure connection: ① Backward compatibility: ② Only settable with secure connection. Available from firmware version 3.00.04 onwards Get configuration ③ Set configuration ④ ① ► Check *Allow only secure connection* so that all connections are secure. ② activates or deactivates compatibility to Generation 2 KBRP ③ reads the current secure connection and backward compatibility configuration ④ sets the secure connection and backward compatibility configuration
⑤	*NTP settings*	enters a preferred NTP[1)] server; see *Changing NTP Settings, p. 76*
⑥	*DNS server settings*	changes DNS server settings; see *Changing DNS Server Settings, p. 77*

Changing NTP Settings

To simplify the time setting, it is possible to enter a preferred NTP server. This way, in a defined interval, the reader retrieves the information from the NTP server and gets the time from the network, thus setting the internal time settings of the reader.

► Click *NTP settings* (②).

⇨The following dialogue opens.

NTP-Settings

NTP server: ①

Interval: 0 s ② + −

Time: 1/1/2012 4:25:30 AM ③

Status: RRU4Configurator: GetNTPInterval: Invalid data ④

⑤ Get NTP server ⑥ Set NTP server

Get interval ⑦ Set interval ⑧

Get time ⑨ Set time via NTP ⑩

①	*NTP server*	enters an NTP server address, e.g. 0.pool.ntp.org
②	*Interval*	sets the interval in the range 0–4204967295 s to synchronise the time with the NTP server
③	*Time*	shows the current date and time of the reader
④	*Status*	shows the status of the last performed operation in the *NTP settings* dialogue
⑤	*Get NTP server*	reads the NTP server settings currently set in the system
⑥	*Set NTP server*	sets the NTP server selected at ①
⑦	*Get interval*	reads the interval currently set in the system
⑧	*Set interval*	sets the interval selected at ②
⑨	*Get time*	gets the current time of the reader
⑩	*Set time via NTP*	manually synchronises the time with the NTP server

[1)] *Network Time Protocol*

Changing DNS Server Settings

► Click *DNS server settings* (②).

⇨The following dialogue opens.

DNS server settings

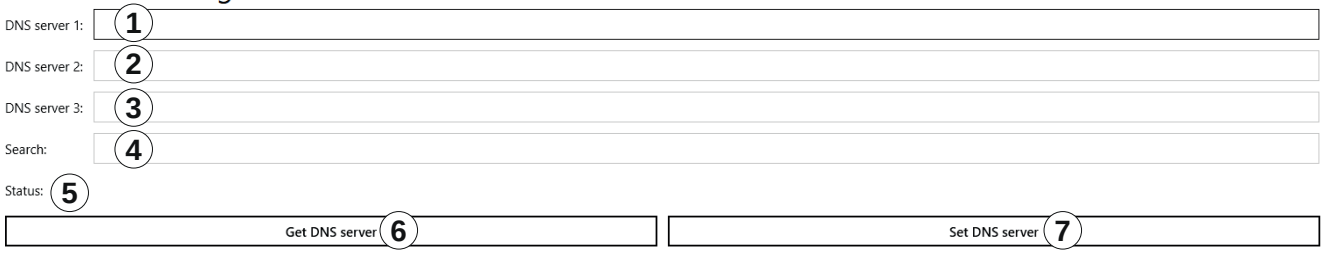

①	*DNS server 1*	enters the DNS server address
②	*DNS server 2*	enters the DNS server address
③	*DNS server 3*	enters the DNS server address
④	*Search*	contains the local domain name
⑤	*Status*	shows the status of the last performed operation in the *DNS server settings* dialogue
⑥	*Get DNS server*	reads the DNS server settings currently set in the system
⑦	*Set DNS server*	sets the DNS server

Info

This menu item provides information about the *ReaderStart* software and the reader.

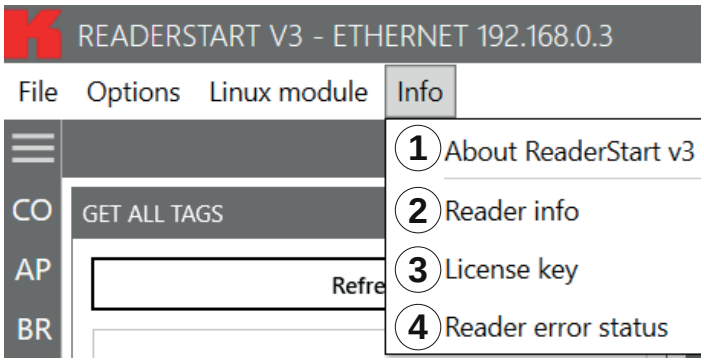

Fig. 43: Info

①	*About ReaderStart v3*	shows the version number of the software and links to the licenses
②	*Reader info*	shows information about the reader; see *Showing Reader Information, p. 79*
③	*License key*	automatically reader the license key and show various factory-set reader parameters; see *Showing License Key Information, p. 80*
④	*Reader error status*	reads the error status of the reader and shows all errors that are outstanding in the status field

Showing Reader Information

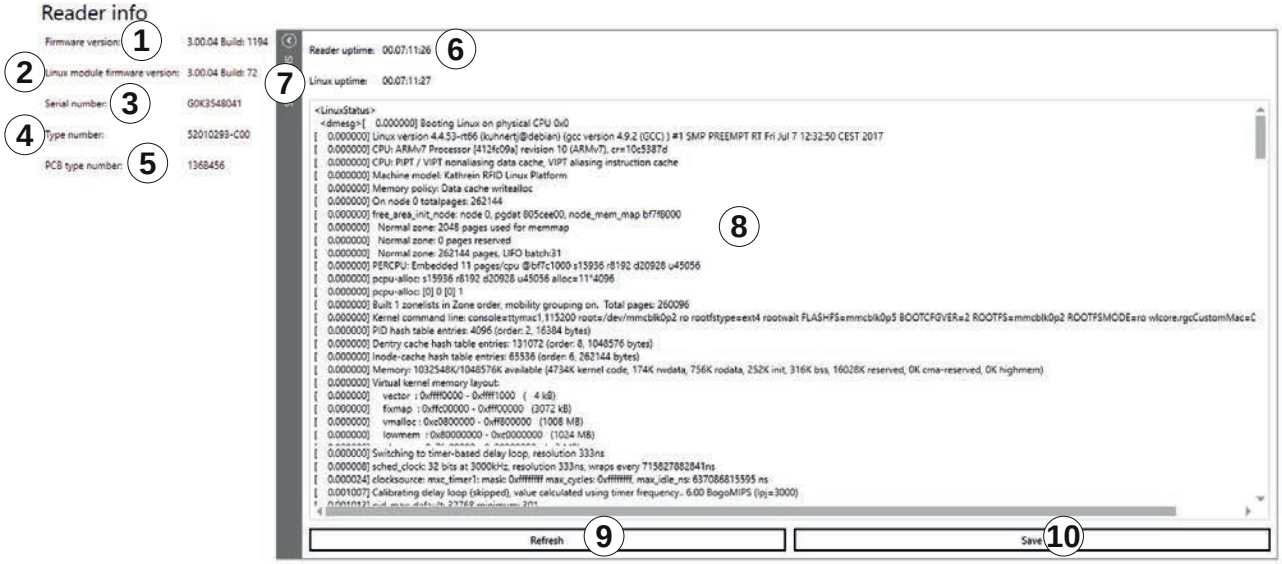

Fig. 44: Info: reader info

①	*Firmware version*	shows reader firmware version
②	*Linux module firmware version*	shows Linux module firmware version
③	*Serial number*	shows the reader's serial number
④	*Type number*	shows the reader's type number
⑤	*CPU module*	shows the CPU module number
⑥	*Reader uptime*	shows time during which the reader has been running
⑦	*Linux uptime*	shows time during which the Linux module has been running
⑤	Details	shows details about the reader
⑨	*Refresh*	updates the reader and Linux uptime
⑩	*Save*	saves the reader info in an XML file

Showing License Key Information

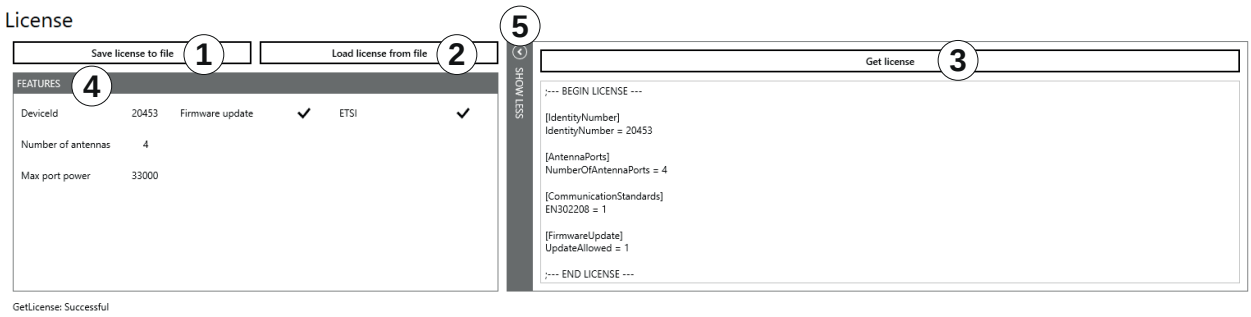

Fig. 45: Info: license key

①	*Save license to file*	saves the license key in a license file
②	*Load license from file*	loads a license key from a license file
③	*Get license*	shows the current license key details
④	*Features*	shows factory-set parameters of the reader
⑤	*Show less/ Show more*	shows/hides the information shown in the right part of the screen under *Get license*

In certain cases, it is necessary to send the license key to KATHREIN Solutions GmbH.

1. To do so, click *Save license to file* (① in *Fig. 40*).
2. Select the file name and the destination directory.
3. Send the file to KATHREIN Solutions GmbH.

To send the file to KATHREIN Solutions GmbH:

1. Go to the support portal of the KATHREIN Solutions GmbH at https://support.kathrein-solutions.com/.
2. If you do not have an account yet, create an account.
3. After the successful registration, click *Ticket Tracking*.
4. Click *Add Ticket*.
   ⇨A new mask appears in which you can describe your question and attach files.
5. Attach the file with the license key by clicking *Browse*.
6. Click *Save* to send the file to the KATHREIN Solutions GmbH support team.

15.4.2 Status Field

3 message types are defined, see the example below:

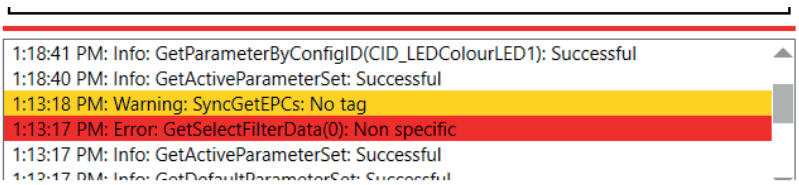

Fig. 46: Status field

①	*Info*	shows which action has been recently performed
②	*Warning*	indicates possible problems in the structure and configuration
③	*Error*	indicates that the required action could not be executed

Every status message has a time stamp next to it. The status messages are arranged such that the most current one is always at the top of the list.

Tip

- ▶ To expand the status field section and see more status messages, click on the boundary line between the sections (red line in *Fig. 41*) and drag it upwards.
- ▶ To minimise the status field section, drag the line downwards.

The status field has a context menu which allows to deactivate warnings, information and errors in the status field. It is also possible to delete status messages.

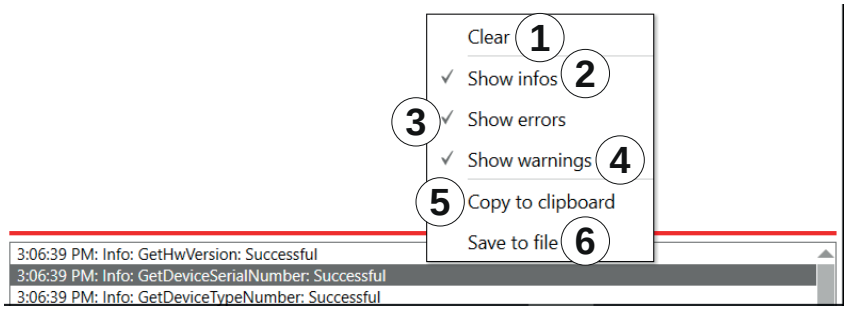

Fig. 47: Status field context menu

①	*Clear*	deletes all status messages
②	*Show infos*	shows/hides infos
③	*Show errors*	shows/hides errors
④	*Show warnings*	shows/hides warnings
⑤	*Copy to clipboard*	copies the status field entries to the Windows clipboard

⑥	*Save to file*	saves status messages in the txt. format 1. Click *Save to file*. ⇨A pop-up windows appears requiring to select the location of the file. 2. Select the directory/folder. 3. Click *Save*. ⇨A pop-up message *Saving done* appears. 4. Click *OK* to close the pop-up message.

16 Operating the Reader Using the *ReaderStart* Software

16.1 Communication

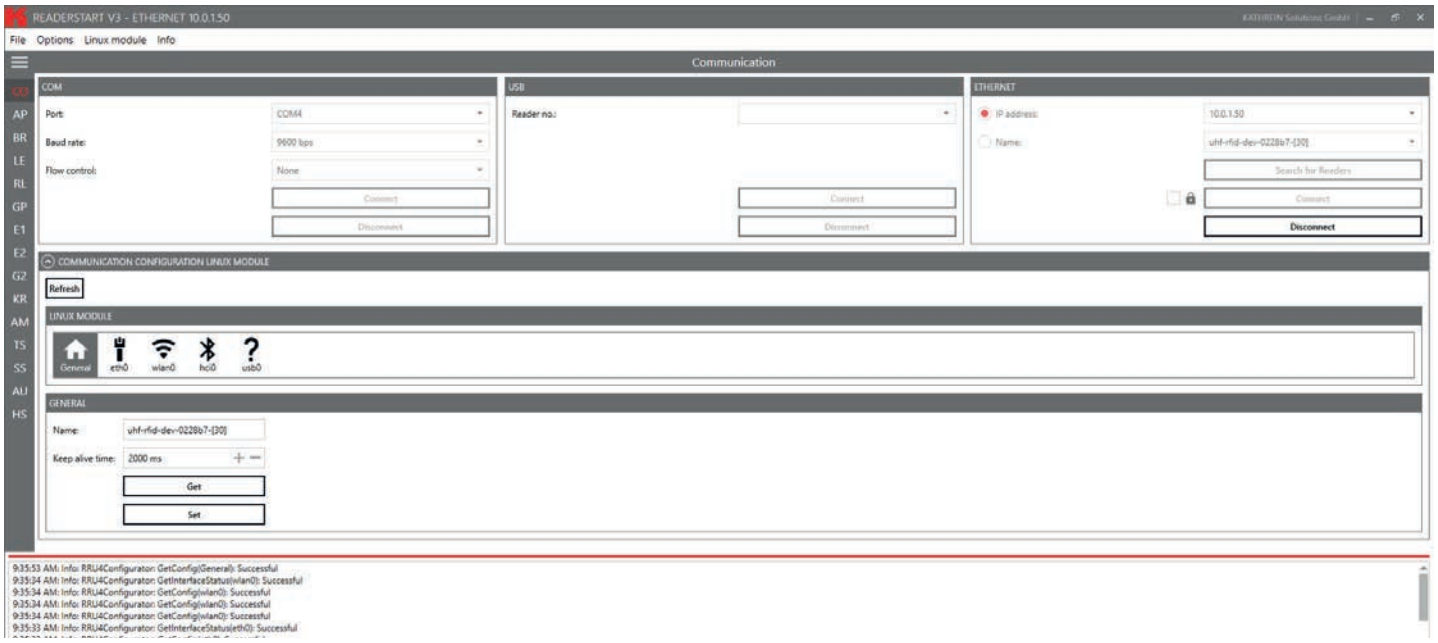

Fig. 48: Communication Tab

The communication tab groups together all the functions for establishing connections and configuring the Linux module. The various communication connections are grouped in 3 sections:

- *COM* for serial connections via the COM port (RS232/485/422); only available in the M-ARU-ETH-E6 reader (order number 52010198);
- *USB* for connections up to version USB 2.0; only available in the ERU-ETG-E4 (order number 52010190) and ERU-ETG-U4 reader (order number 52010191);
- *Ethernet* for connections via TCP/IP;
- *Communication Configuration Linux Module* section to change the Ethernet setting; see *Communication Configuration Linux Module, p. 85*

When the connection has been established, the program retrieves the information about the installed Linux module. It is possible to view and change the configuration information via the *Communication Configuration Linux Module*.

16.1.1 Ethernet Section

The Ethernet connection is established by linking the reader into an existing network or by directly connecting the reader and the control computer. To directly connect the reader to the PC, a cross-link cable is required, unless the LAN interface on the PC supports *auto-mdi-x*. Alternatively, it is possible to use two standard patch cables and a switch.

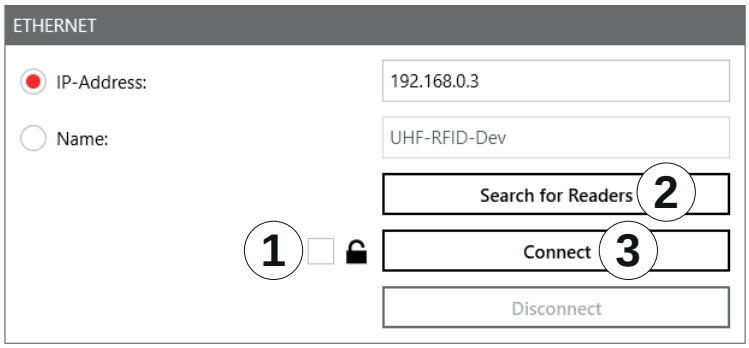

Fig. 47: Ethernet section

Establishing a Secure Connection

✓ The connection to the reader has not yet been established.

1. In the Ethernet section, click the box next to the lock symbol (① in *Fig. 44*).
2. Click *Search for Readers* (②) or *Connect* (③).
   ⇨The following pop-up window appears:

3. Type in the user name at *User* (①). The default user name is *root*.
4. Enter the default password *UHF-RFID-Dev* at *Password* (②).

> **Tip** You can change the password under *Linux module* ▸ *Connection config*; see *Linux Module, p. 75.*

5. If you want to use the key file instead, click the box at *Key file* (③).
   ⇨A pop-up window to select the key file opens.
6. Select the key file.
7. Click *OK* to establish the secure connection.
   ⇨It is possible to configure the secure connection under *Linux module* ▸ *Connection config*; see also *Linux Module, p. 75.*

Loading Factory Default Settings

When resetting the reader to factory default, the *ReaderStart* sends out a UDP broadcast cmd. It is only possible 30 seconds after power rebooting.

> **!** Note that this command also resets the Linux module settings, such as Linux password, network name, IP address, deactivates the auto start of the apps etc.

1. In the Ethernet section, click *Search for Readers*.
2. Select the reader onto which you would like to load the factory default settings.

3. Right-click on the reader.
   ⇨The following pop-up message appears:

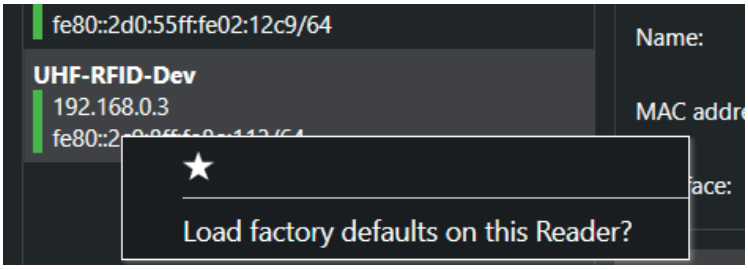

4. Click *Load factory defaults on this Reader*.
   ⇨The pop-up message *Are you sure to load factory defaults on this reader* appears.
5. Click *Yes* to set the reader to the factory default settings.
   Click *No* to cancel.
   ⇨If you have clicked *Yes*, another pop-up window appears:

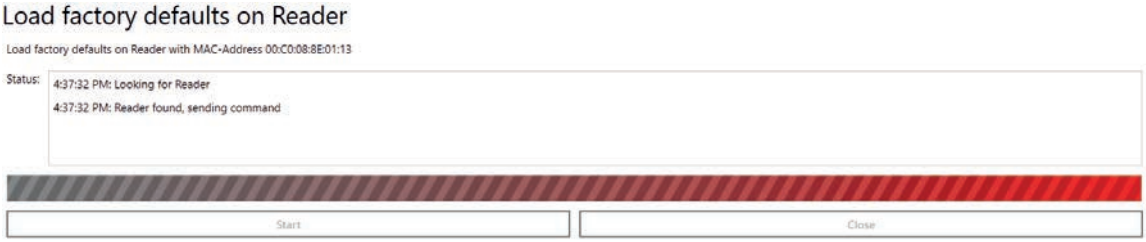

6. Click *Start*.
   ⇨A pop-up message *Are you really sure to load factory defaults on this reader* appears.
7. Click *Yes* to set the reader to the factory default settings.
   ⇨The status messages informing about the progress of the reset process are shown in the *Status* field of the pop-up window, see examples in the figure above.
8. After the factory default settings have been loaded onto the reader, click *Close*.

Selecting a Favourite Reader

If there are many readers in the system and the user establishes connection to one reader more frequently than to the others, it is possible to select the preferred reader as a favourite reader, placing it at the top of the reader list.

1. In the Ethernet section, click *Search for Readers*.
2. Select the preferred reader.
3. Right-click on the reader.
   ⇨The following pop-up message appears:

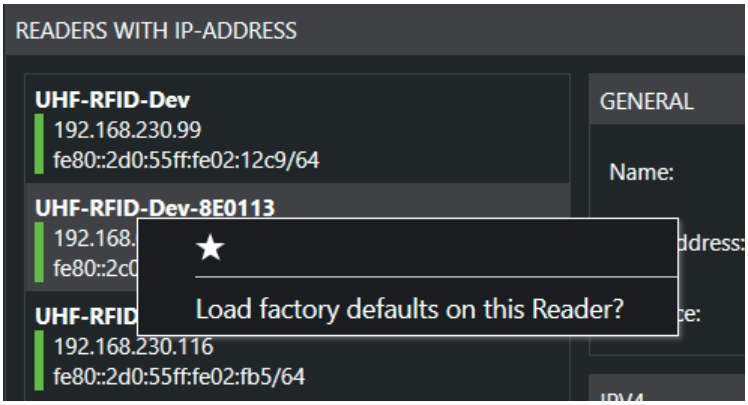

4. Click on the star.

   ⇨The preferred reader is now placed at the top of the list, making it easier for the user to select it:

16.1.2 Communication Configuration Linux Module

> **!** Communication Configuration Linux Module has different options, depending on the reader type.

Selecting a Linux Module Option

1. Click on the arrow symbol next to *Communication Configuration Linux Module*.

   ⇨The following options appear:

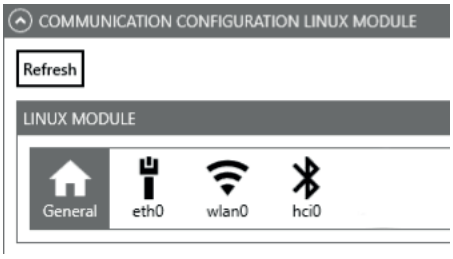

2. Click on one of the four options (*General*, *Ethernet*, *Wi-Fi*, *Bluetooth*) to change the settings.

General

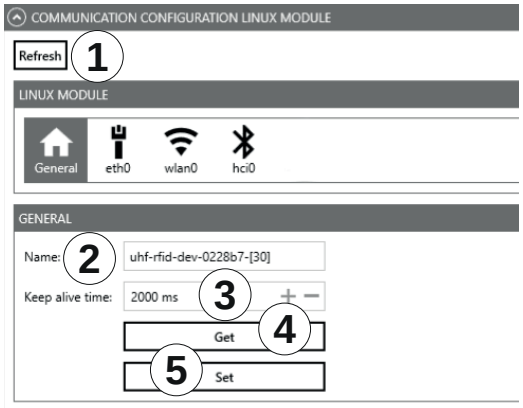

Fig. 49: Communication configuration Linux model: general

①	*Refresh*	reads the current settings of the communication configuration Linux module
②	*Name*	shows the host name of the reader which is logged onto the DNS server It is possible to address the reader using this name as an alternative to the IP address.
③	*Keep alive time*	specifies the intervals of time at which the reader sends a data packet to check whether the receiver is still available If the connection to the reader is broken, the reader shuts down the connection. If this parameter is deactivated (0 ms), the socket is shut down only when the reader is restarted. ! If no keep-alive time is set, it may happen that the reader cannot take up any further connections because the existing connections have not been properly shut down, e.g. following a breakage in the wire. In this case, it is necessary to restart the reader. It is recommended to use the keep-alive time to check the connection between the reader and PC.
④	*Get*	reads the configured general settings
⑤	*Set*	saves new general settings

Ethernet

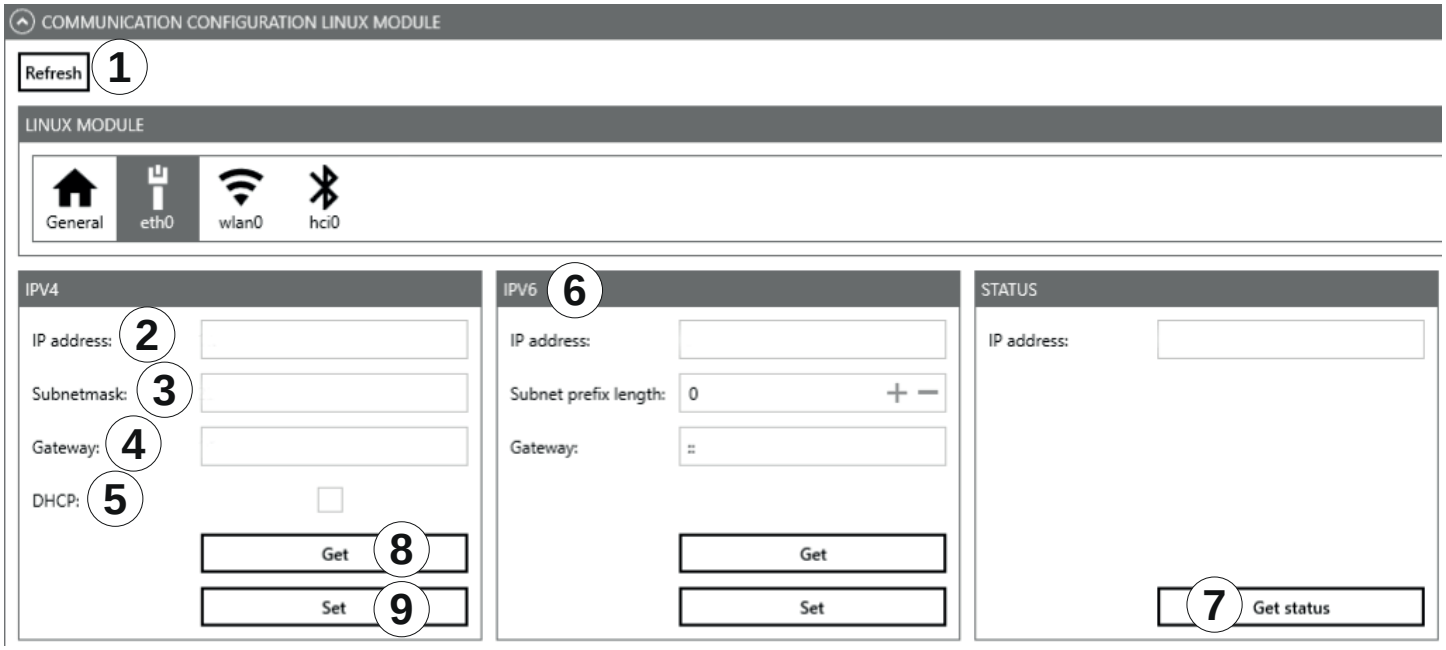

Fig. 50: Communication configuration Linux model: Ethernet

①	*Refresh*	reads the current settings of the communication configuration Linux module
②	*IP address*	manually issues the address **Tip** It is only possible to use this parameter if the DHCP (⑥) is deactivated.
③	*Subnet mask*	manually issues a network mask **Tip** It is only possible to use this parameter if the DHCP (⑥) is deactivated.
④	*Gateway*	enters the gateway
⑤	*DHCP*	activates/disactivates the automatic issuing of an IP address by a DHCP server; if the network has a configured DNS server, it is also possible to use the host name of the reader.
⑥	*IPv6*	enters the second IPv6 address (the first IPv6 address is the link local address)
⑦	*Status*	shows the current reader IP address (eth0)
⑧	*Get*	gets the current status
⑨	*Set*	saves changes

! If the data relevant to the current connection (e.g. IP address) are changed, it may cause an error and the connection is lost.

If the interface has been configured incorrectly, it is not possible to establish a connection to the reader.

► Note the following default configuration settings:

Name	UHF-RFID-Dev
IP address	192.168.0.1
Subnet mask	255.255.255.0
Keep-alive time	2000 ms
DHCP	deactivated

Wi-Fi

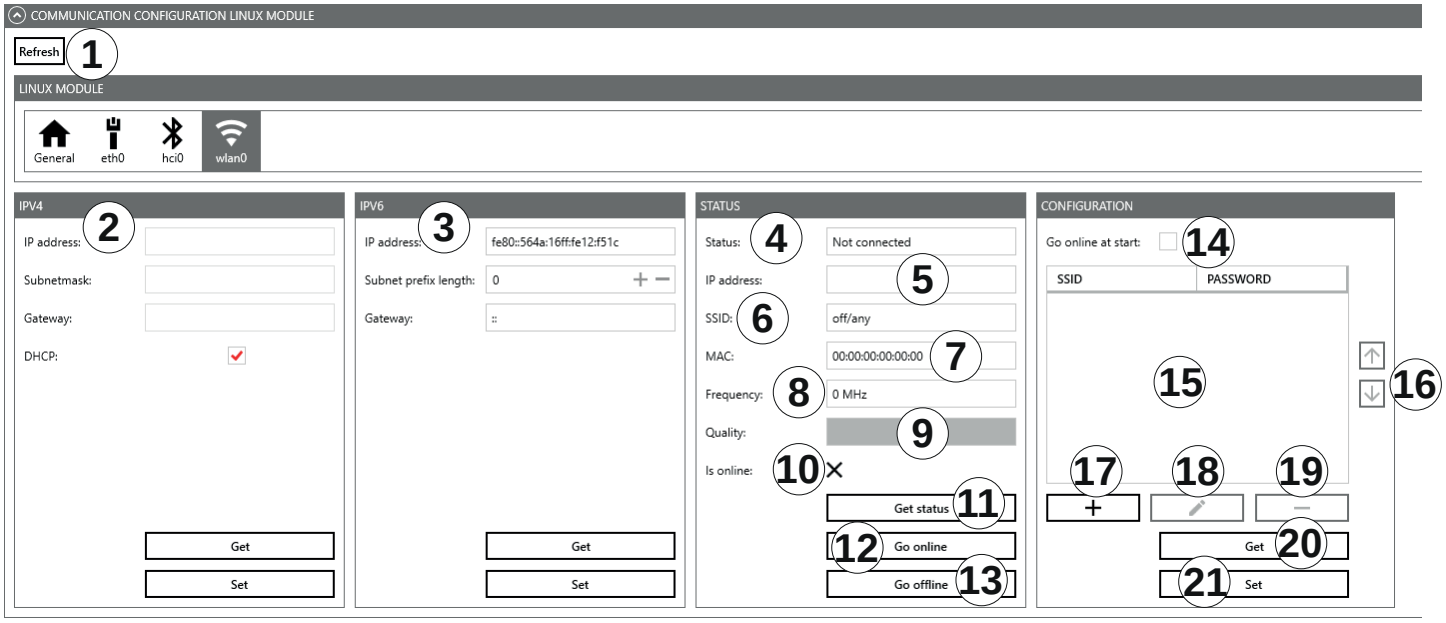

Fig. 8: Communication configuration Linux model: Wi-Fi

①	*Refresh*	reads the current settings of the communication configuration Linux module
②	*IP4*	see *Fig. 46, p. 87*
③	*IP6*	enters the second IPv6 address (the first IPv6 address is the link local address)
④	*Status*	shows the status of the Wi-Fi connection
⑤	*IP address*	shows the current IP address
⑥	*SSID*	shows the name of the access point
⑦	*MAC*	shows the MAC address of the access point
⑧	*Frequency*	shows the frequency of the Wi-Fi connection
⑨	*IsOnline*	shows whether the Wi-Fi module is online
⑩	*Quality*	#zeigt die Qualität von was? der Verbindung?
⑪	*Get status*	reads the current status of the Wi-Fi module
⑫	*Go online*	establishes the Wi-Fi connection

⑬	*Go offline*	interrupts the Wi-Fi connection
⑭	*Go online at start*	activates or deactivates the Wi-Fi connection as soon as the reader starts
⑮		shows the list of the configured access points with SSID and password; the access points are shown in the priority order
⑯		changes the priority of the selected access point
⑰	+	adds an access point 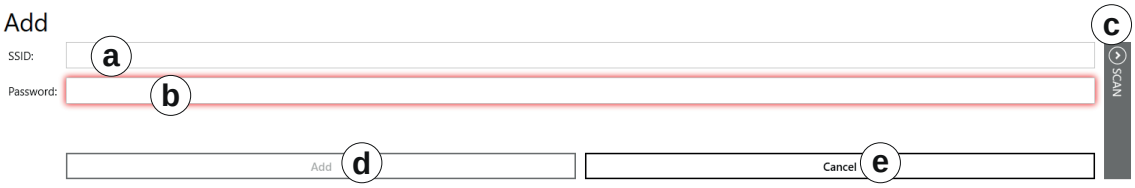 ⓐ enters the SSID of the access point ⓑ enters the password for the access point ⓒ opens the list with available access points ⓓ adds an access point ⓔ cancels the operation ► Click *Scan* to open the list with available access points: 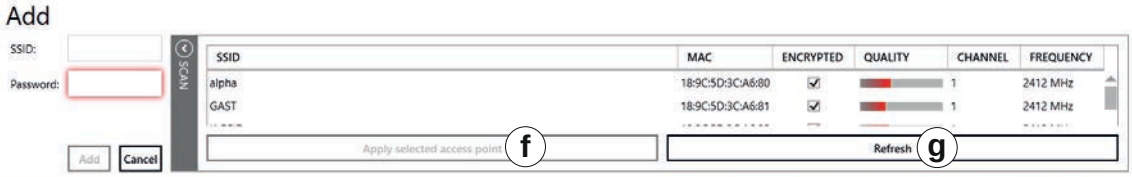 ⓕ adds the SSID of the selected access point to ⓐ ⓖ updates the list of available access points
⑱		edits the selected access point 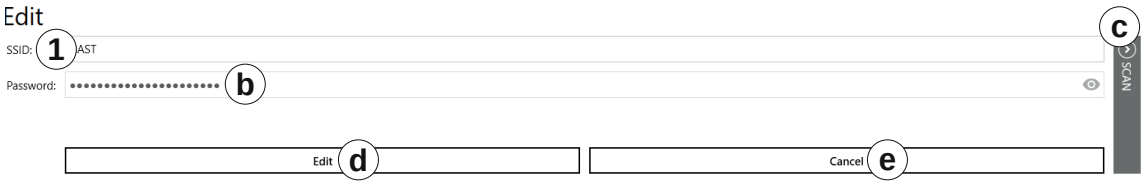 ⓐ changes the SSID of the access point ⓑ changes the password of the access point; only active when securely connected ⓒ opens the list with available access points ⓓ edits the access point ⓔ cancels the operation
⑲	–	deletes the selected access point

⑳	*Get*	reads the configured access points
21	*Set*	sets the access points; only active when securely connected

Bluetooth

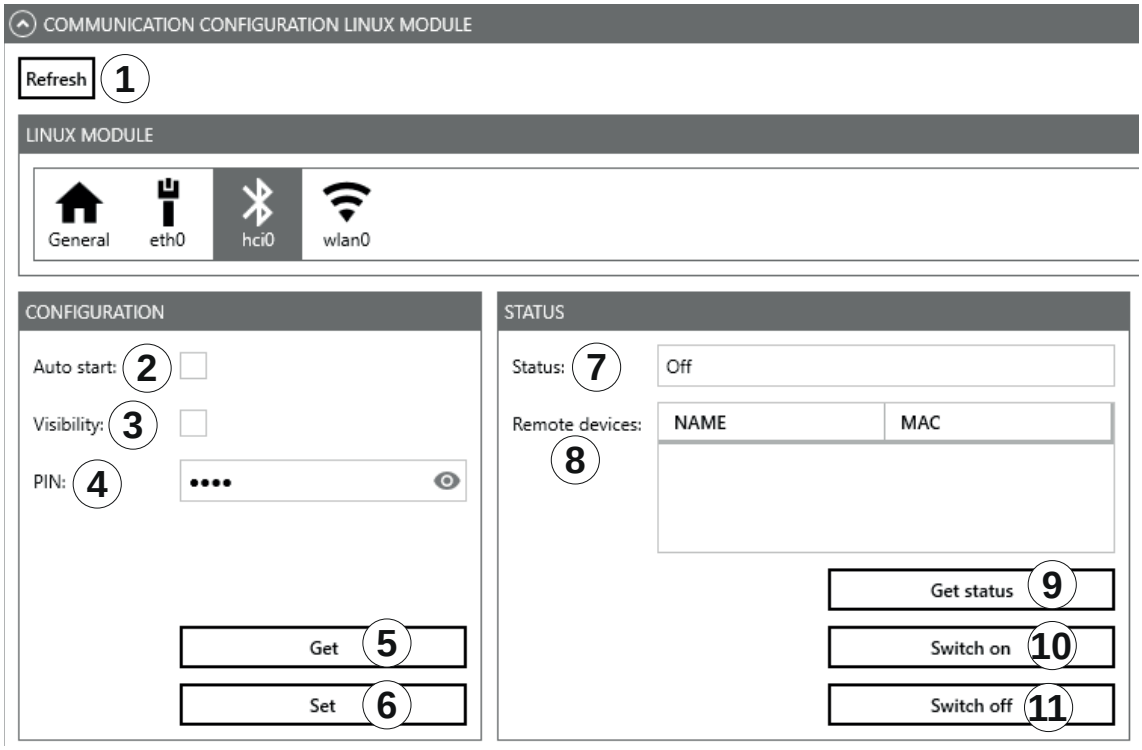

Fig. 9: Communication configuration Linux model: Bluetooth

①	*Refresh*	reads the current settings of the communication configuration Linux module
②	*Auto start*	activates or deactivates Bluetooth as soon as the reader starts
③	*Visibility*	activates or deactivates the Bluetooth visibility of the reader for other devices
④	*PIN*	sets the PIN for the Bluetooth connection; the default PIN is 4007
⑤	*Get*	reads the current Bluetooth configuration
⑥	*Set*	sets the configuration of the Bluetooth connection; only active when securely connected
⑦	*Status*	shows the status of the Bluetooth connection
⑧	*Remote devices*	shows the remote devices connected to the reader
⑨	*Get status*	shows the status of the Bluetooth connection
⑩	*Switch on*	activates the Bluetooth module
⑪	*Switch off*	deactivates the Bluetooth module

Mobile Communication Interface (2G/3G)

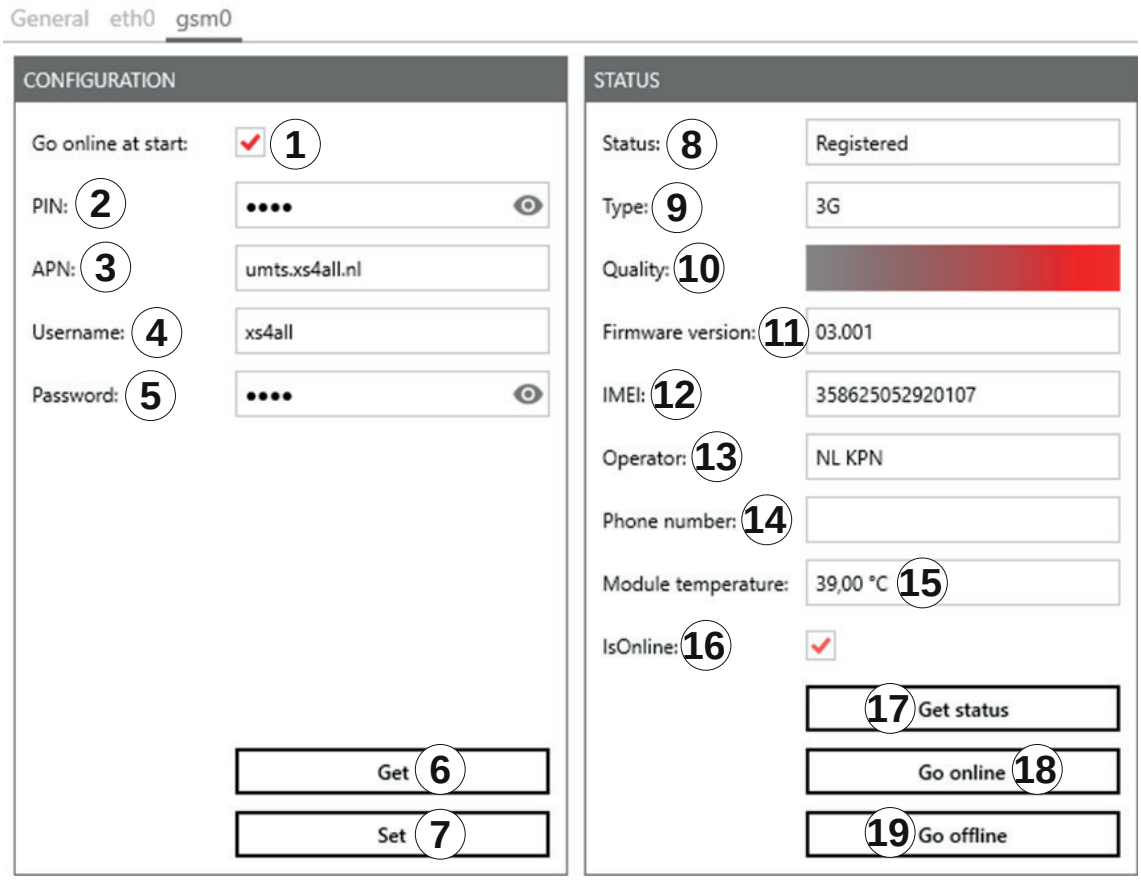

Fig. 10: Communication configuration Linux model: mobile communication interface (2G/3G)

①	*Go online at start*	activates or deactivates the GSM connection as soon as the reader starts
②	*PIN*	enters the PIN code for the SIM card
③	*APN*	enters the access point name from the provider
④	*User name*	enters the access point name from the provider
⑤	*Password*	enters the access point name from the provider
⑥	*Get*	reads the current configuration of the GSM module
⑦	*Set*	sets the configuration of the GSM module; only active when securely connected
⑧	*Status*	shows the status of the GSM connection
⑨	*Type*	shows the GSM connection type
⑩	*Quality*	shows the quality of the GSM connection
⑪	*Firmware version*	shows the firmware version of the GSM module
⑫	*IMEI*	shows the serial number of the GSM module
⑬	*Operator*	shows the operator of the GSM connection
⑭	*Phone number*	shows the phone number of the SIM card

⑮	*Module temperature*	shows the temperature of the GSM module
⑯	*IsOnline*	shows whether the GSM module is online
⑰	*Get status*	reads the current status of the GSM module
⑱	*Go online*	establishes the GSM connection
⑲	*Go offline*	interrupts the GSM connection

16.2 Application

The Application tab enables quick and easy configuration of the Kathrein RFID Reader for a selected application.

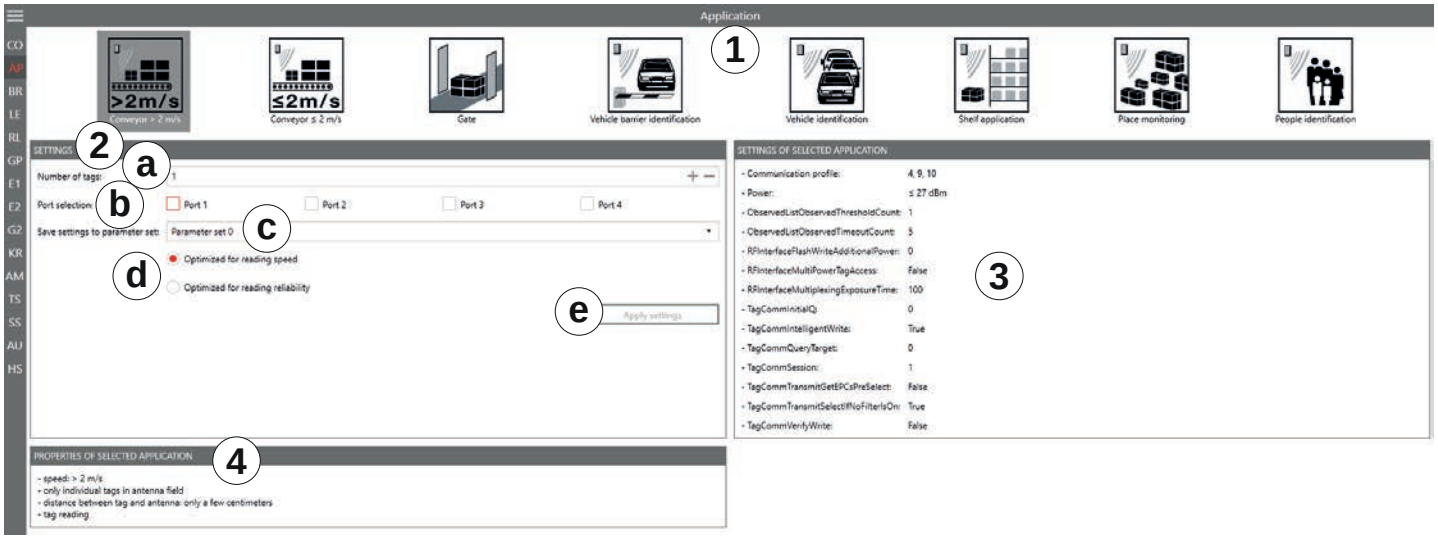

Fig. 51: Application Tab

①	*Application*	selects between the available applications represented visually by means of labelled pictograms ► Click on a pictogram to select the application. ⇨The selected pictogram is marked in a darker colour, in *Fig. 50* it is *Conveyor > 2 m/s.*

②	*Settings*	changes setting of the selected application	
		ⓐ	number of the expected tags
		ⓑ	selects the antenna to be used ► Check Ports 1-4 to select the antenna port. It is possible to select one, several or all ports.
		ⓒ	selects the parameter set in which the configuration is saved
		ⓓ	sets the values for max. reading speed or max. reading reliability ► Click *Optimised for reading speed* or *Optimised for reading reliability*. ⇨The values in *Settings of selected application* (③ in *Fig. 50*) change. When the max. read frequency is set (*Optimised for reading speed* is activated), the number of readings is maximised. In this case, the same tag can be read several times, because all tags will be reset in the inventory so that they will respond again. Because of reading the same tag multiple times, in a scenario of moving tags it could happen that not all the tags crossing the antenna field are read. The frequency of detection of the same tag is increased. In some cases, the time allowed for detecting the tags may be insufficient, so that some transponders are not detected. When the max. read reliability is set (*Optimised for reading reliability* is activated), tags that have already been read are not read again in the next inventory, provided they are still being supplied with power. This means that only the tags which have not yet been registered are detected. This way, the probability that all tags are read is increased.
		ⓔ	saves the settings that have been made as the settings for the selected application in the selected parameter set. The programme resets the settings to the factory settings first, thus overwriting the previous configuration. If the settings have been reset, the *Apply settings* button briefly glows green and a success message is displayed in the *Status* field of the programme interface. If case of a fault, the *Apply settings* button briefly glows orange to indicate a warning or red to indicate an error. If the fault has been caused by a missing entry, the field lacking the entry also glows red. A warning/error description is displayed in the *Status* field. After the settings have been loaded, it is possible to go to the *Basic reading* tab and to start the read process.
③	*Settings of selected application*	shows the settings that have been made for the selected application in the selected parameter set	
④	*Properties of selected application*	shows the properties of the selected application	

Tip

The read rate is influenced by many parameters. In addition to the selected broadcasting profile with the respective data rates, there are also application-specific data, e.g. how many tags the reader should expect in the field. You can optimise these parameters using the *Expert settings 1* and *2*.

► If you are unsure whether the settings you have chosen are best suited for your application, contact KATHREIN Solutions support at https://www.kathrein-solutions.com/support.

16.2.1 Available Applications

When the application is selected, the properties and the settings of the selected application are displayed in the respective fields.

The applications available for selection in version 3.00 of the *ReaderStart v3* are shortly described in the following chapters.

Conveyor belt > 2 m/s

- for detecting individual tags in the antenna field on a conveyor belt moving at more than 2 m/s
- the distance between the tags and the antenna must be only a few centimetres

Conveyor belt ≤ 2 m/s

- for detecting and describing individual tags in the antenna field on a conveyor belt moving at a speed less than or equal to 2 m/s
- the distance between the tags and the antenna must be only a few centimetres

Gate

- for detecting multiple tags in the antenna field as they pass through a gate

Vehicle Barrier Identification

- for detecting and describing individual tags in the antenna field which are not moving
- the distance between the tags and the antenna must be less than a few metres

Vehicle Identification

- for detecting and describing multiple tags in the antenna field which are moving at a speed of more than 14 m/s
- the distance between the tags and the antenna must be less than a few metres

Shelf Application

- for detecting and describing individual tags in the antenna field which are not moving
- the distance between the tags and the antenna must be less than 1 m

Place Monitoring

- for detecting and describing multiple tags in the antenna field which are not moving
- the distance between the tags and the antenna must be less than 1 m

Personal Identification

- for detecting multiple tags in the antenna field which are moving at a speed of not more than 3 m/s
- the distance between the tags and the antenna must be less than 1 m

16.3 Basic Reading

This tab is divided into two parts, the left part contains a table with information about the read tags (Ⓐ in the figure below), the right part (Ⓑ) shows the statistics as well as options to control the reading process, described in the chapters to follow.

The appearance and disappearance of a tag is shown in colour for better visual effect. When a tag appears in the field, the row is represented by the green tag information, when it disappears, the row is red.

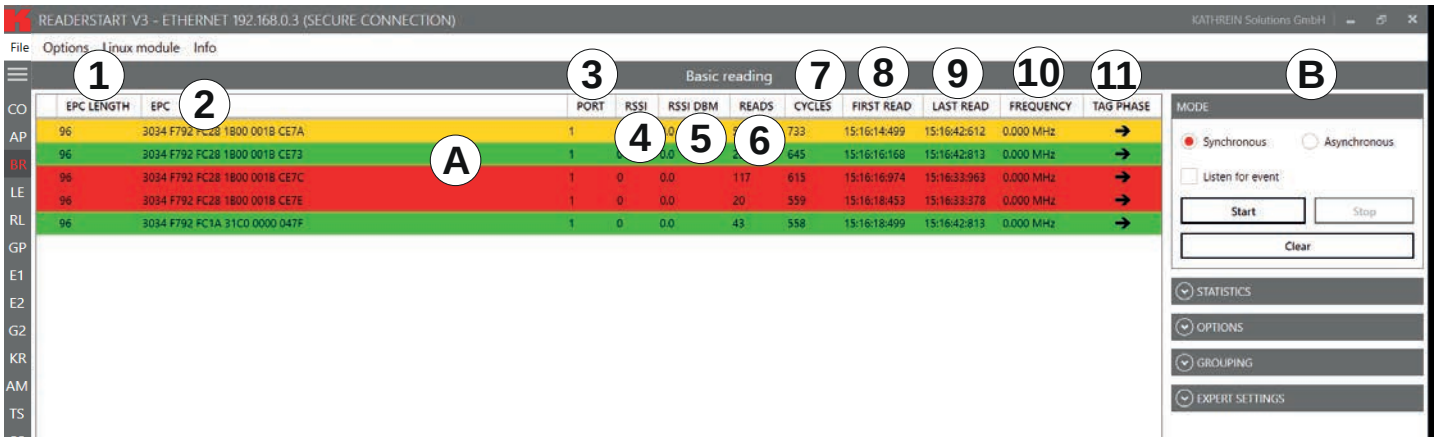

Fig. 52: Basic reading

①	*EPC length*	indicates the length in bits of the EPC; valid lengths 0–496
②	*EPC*	EPC of the tag in the hexadecimal representation
③	*Port*	antenna port at which the tag is read; valid values 1–4
④	*RSSI*	unitless (shown as having no units) signal strength of the tag response
⑤	*RSSI DBM*	shows the RSSI value in dBm
⑥	*Reads*	shows how many times this tag has been read successfully
⑦	*Cycles*	indicates how often an inventory has been started
⑧	*First read*	timestamp of the first tag reading
⑨	*Last read*	timestamp of the last tag reading
⑩	*Frequency*	shows the used transmission frequency
⑪	*Tag phase*	shows the tag phase in form of a rotating pointer This parameter is used to distinguish between stationary and moving transponders. If the transponder is moving away from the antenna, the pointer rotates counterclockwise, and clockwise, if the transponder is moving towards the antenna. The movement speed is directly proportional to the rotational speed of the pointer. In a full rotation of 360°, the transponder travels a distance of 17 cm. **!** Note that the reader has to change the transmission frequency every 4 seconds, causing a phase jump. The tag phase is also shown in the TagScan monitor; see *TagScan, p. 136*

16.3.1 Mode

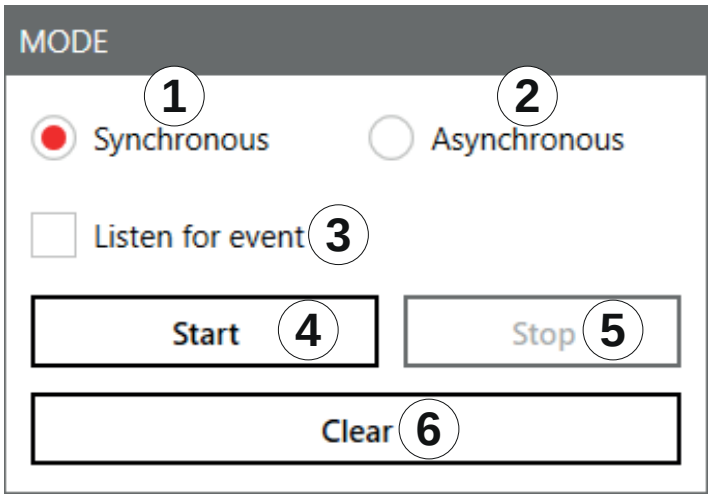

Fig. 53: Basic reading: mode

①	*Synchronous*	allows the facility to switch the carrier off during the idle times, saving power This mode is intended for applications in which the requirements for timing are not very demanding. The inventory of the tags is performed across all the antennas that are configured. Once all the tags in the field have been read on the last antenna, data are sent to the PC. The PC automatically retriggers the inventory of the tags.
②	*Asynchronous*	is intended for applications for which maximum performance is required The reader starts the inventory as quickly as possible, and at the end of an inventory it does not deliver every tag that was read to the PC, but only those that have recently appeared in the field or left it. This way, the time required for communication between the reader and the client is minimised. The timing of when a tag was reliably read in the field and when the tag no longer appears in the field can be defined more precisely using parameters. ► For more details of the ObservedThresholdCnt and ObservedTimeoutCnt parameters, refer to the *Configurational manual reader*.
③	*Listen for event*	deactivates or activates waiting for the result of the command executed by an external trigger and shows the result in Ⓐ in *Fig. 30* When deactivated, there is no waiting process and it is possible to start the reading process at any time.
④	*Start*	starts the reading
⑤	*Stop*	stops the reading
⑥	*Clear*	deletes the reading results from the table on the left (Ⓐ in *Fig. 51, p. 97*)

16.3.2 Starting and Stopping the Reading

✓ All the settings have been applied and the mode selected.

► Click *Start* (④ in *Fig. 52*) to start the reading.

► Click *Stop* (⑤) to stop the reading.

► Click *Clear* (⑥) to remove all tag entries from the table (Ⓐ in *Fig. 51, p. 97*).

16.3.3 Statistics

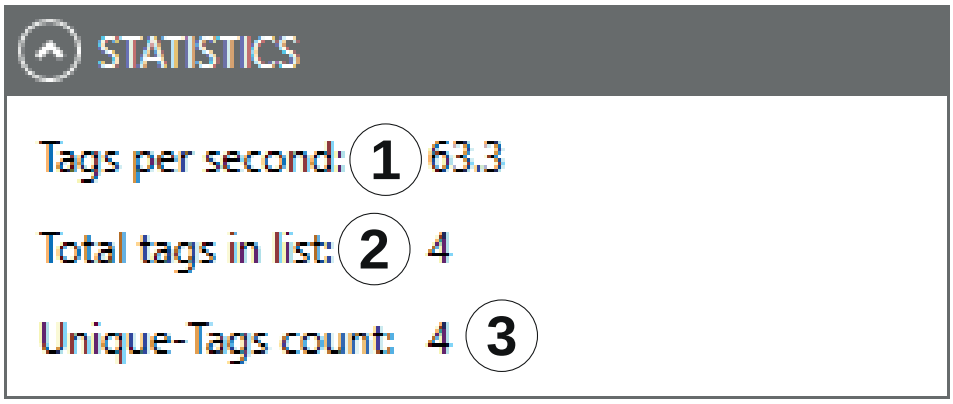

Fig. 54: Basic reading: statistics

①	*Tags per second*	displays the current reading performance
②	*Total tags in list*	shows the total number of tags in the list
③	*Unique Tags count*	shows the number of unique tags detected in the inventory

16.3.4 Options

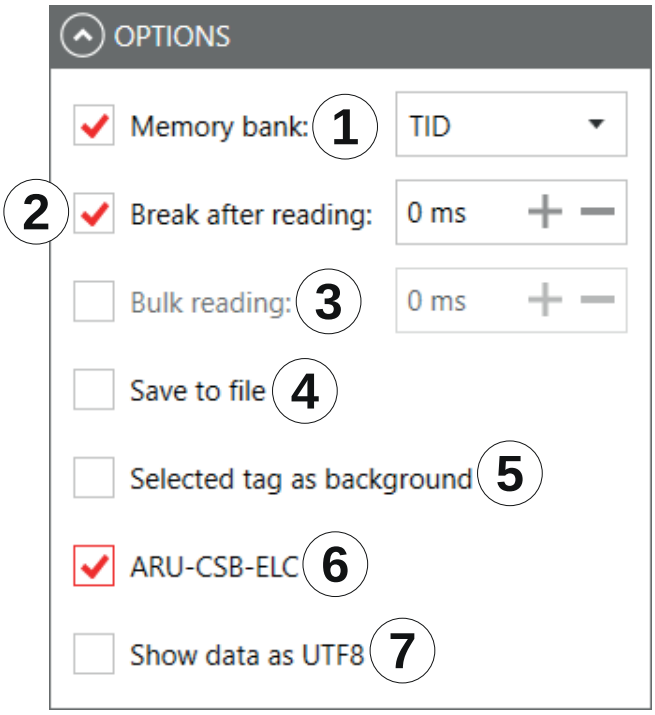

Fig. 55: Basic reading: options

①	*Memory bank*	selects between *RFU*, *EPC*, *TID* and *User* memory banks ► Click on the arrow to open a drop-down list to select a memory bank. ► Click *Save to file* (④) to store the values *RFU*, *EPC*, *TID* and *User* in a CSV file.
②	*Break after reading*	specifies the duration of the break between two inventories in milliseconds During the break, the carrier can be deactivated. ► For more information about switching off the carrier, refer to *Configuration Manual for Kathrein RFID UHF Readers*.
③	*Bulk reading*	sets the time in milliseconds after which the result lists of an inventory is sent to the PC To keep the time between inventories as short as possible in the synchronous mode, data transmission between the inventories can be dispensed with. That means that the reader saves all the tags that it finds in the field in its internal RAM and sends them to the PC after the time set in *Bulk reading*.
④	*Save to file*	saves the data displayed at (Ⓐ in *Fig. 51, p. 97*) ► Click *Change path to log file* to select or change the location where the information is saved. ► Right-click on *Save to file* to open or delete the file.
⑤	*Selected tag as background*	changes the basic reading interface background to the colour of the selected tag row
⑥	*ARU-CSB-ELC*	activates the additional presentation for an ARU-CSB-ELC antenna
⑦	*Show data as UTF8*	shows tag data in the UTF8 format

16.3.5 Grouping

Fig. 56: Basic reading: grouping

It is possible to sort the read result by means of unique tags. This is useful in multi-antenna applications.

If, for example, in a gate application with 4 antennas, a palette of 100 tags is read, the maximum number of the read results is 400. However, not all tags are read by all antennas, therefore, the read result will be about 250.

► Check *Group by unique tags* to find out how many different tags have been read.

16.3.6 Expert settings

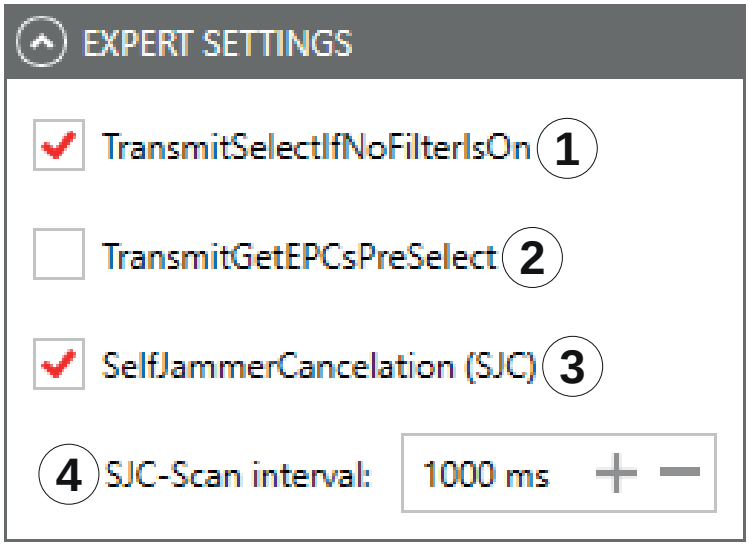

Fig. 57: Basic reading: expert settings

①	*TransmitSelectIfNoFilterIsOn*	resets all the tags that are defined in the field at a given time When the tag count is very high (> 200), it is possible to speed up the detection of the tags by commanding the reader to change to new *Select command*; see *EPCglobal Gen2 Specification*. It is possible to test it in the menu *Expert Settings*. ► Check *TransmitSelectIfNoFilterIsOn*. ☒ ⇨A "select" is sent in each inventory, i.e. all the tags that are defined at this time in the field are reset. However, it can happen that the tags that have been read already are reset and re-recorded again. To capture only new tags, it is necessary to to prevent a renewed "select". ► Uncheck *TransmitSelectIfNoFilterIsOn*. ⇨The tags are read once. This way, no time is lost due to a reread. ! Note that it is not possible to retrieve tags in which the read operation had been interrupted. This way, it may happen that not all the tags are read. Keep that in mind when unchecking this parameter in order to achieve top results.

②	*Transmit-GetEPCsPre-Select*	see Chapter TransmitGetEPCsPreSelect in *Configuration Manual for Kathrein RFID UHF Readers*
③	*SelfJammer-Cancelation (SJC)*	activates/deactivates the optimal receiver sensitivity of the reader This process might be necessary in an industrial environment with increased reflection, e.g. due to metallic structures. However, this process is very time-consuming and slows down the tag detection.
④	*SJC Scan interval*	sets the interval after which the *SelfJammerCancelation* process is executed

16.3.7 ARU-CSB-ELC Antenna Reader Unit

The ARU-CSB-ELC antenna reader unit with the integrated 30° wide-range antenna is controlled by the @KRAI reader. The antenna can be switched to three different beam positions.

Each individual position can be selected fix or all selected positions are exchanged dynamically. The user will get a read result with an indication of the position for the run of a tag (left, centre, right).

Using the time sequence of the reading results of these positions, it is possible to determine the direction of a transponder. Tags which do not change their position are captured as well.

The ARU-CSB-ELC antenna is used, e.g. in gate applications. In addition to the "simple" detection that a tag has passed the gate, the direction of the movement is displayed as well. This can be used, for example, to book a delivery of goods as an input or output immediately.

Having selected the *ARU-CSB-ELC* (⑥ in *Fig. 54, p. 100*) under *Options*, the lower part of the screen shows the spatial allocation of a transponder:

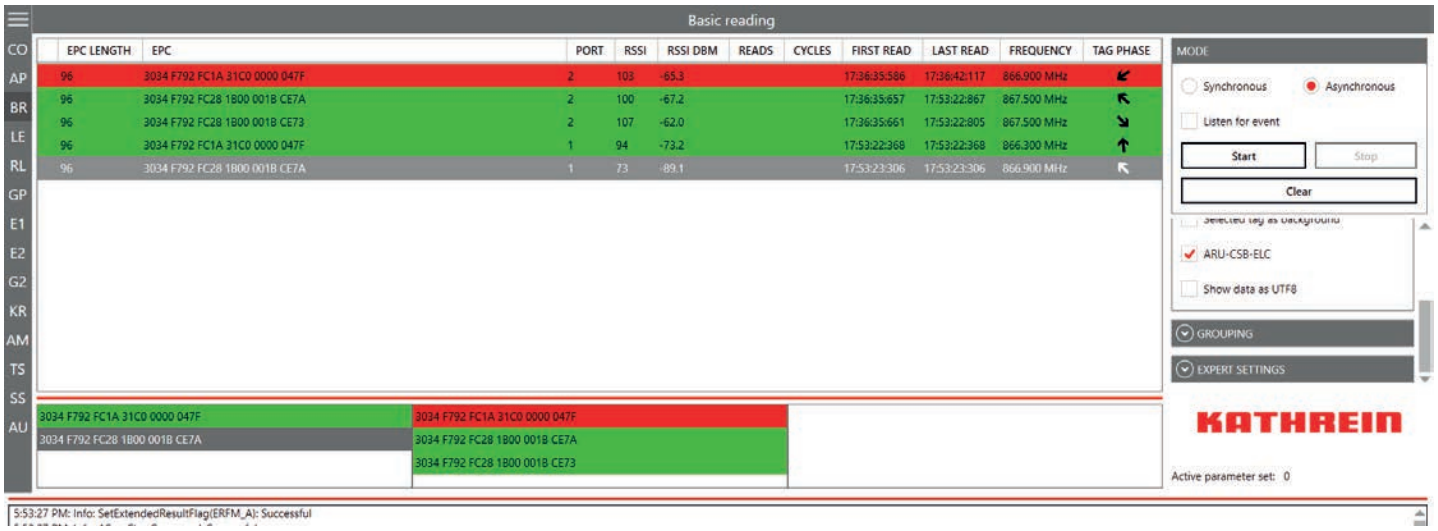

Fig. 58: Basic reading: ARU-CSB-ELC

Tip The WIRA-30-CSB-KRAI antenna is presented in a similar way and is shown under *Options* when connected.

16.4 LED

> **!** Not all readers support the functionality with 12 LEDs; all readers have at least 4 LEDs. Please check the reader data sheet for information.

In this tab, it is possible to assign various functions to the 12 LED channels. It is possible to activate other parameters, depending on the selected function.

> **Tip** As supplied to customer, the first 4 LEDs are allocated to antennas 1–4, LED 5 is allocated to GSM, LED 6 to KRAI, LED 11 and LED 12 to Bluetooth and Wi-Fi, respectively. It is possible to customise this allocation.

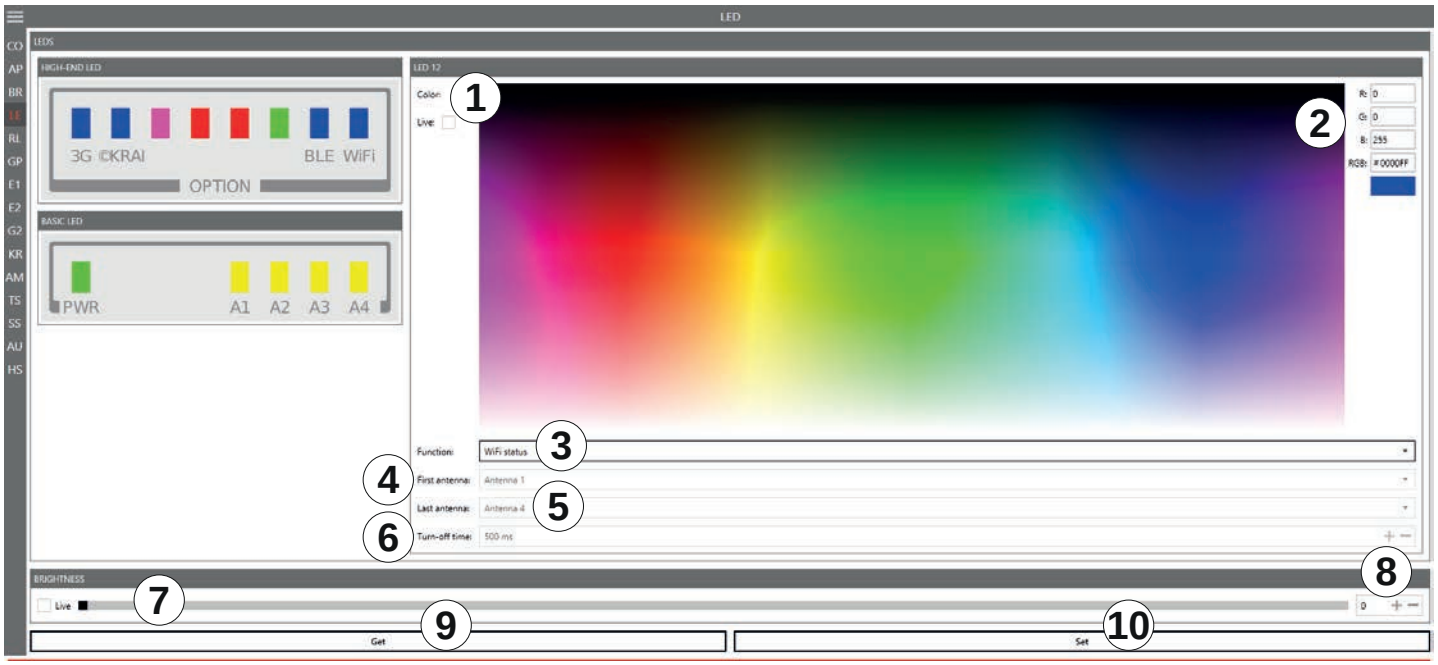

Fig. 59: LED

①	*Live*	shows the changed LED colour in real time
②		enters and shows RGB values
③	*Function*	selects between the functions described in *Selecting Functions, p. 104*
④	*First antenna*	the first antenna for the selected function
⑤	*Last antenna*	the last antenna for the selected function
⑥	*Turn-off time*	sets the time for how long LED is on for the selected function
⑦	*Brightness (live)*	changes the LED brightness for all active LEDs (between 0 (auto brightness determined by the integrated light sensor) and 100) ► Move the brightness position along the bar to change the brightness of the LED. ⇨The number at ⑧ changes.
⑧		changes the LED brightness (between 0 and 100) ► Click + or – to change the brightness of the LED.
⑨	*Get*	shows the current settings for all LEDs
⑩	*Set*	sets the new settings for all LEDs for which the settings have been altered

16.4.1 Selecting Functions

► Click on the arrow (③ in *Fig. 58, p. 105*) to select between the following functions:

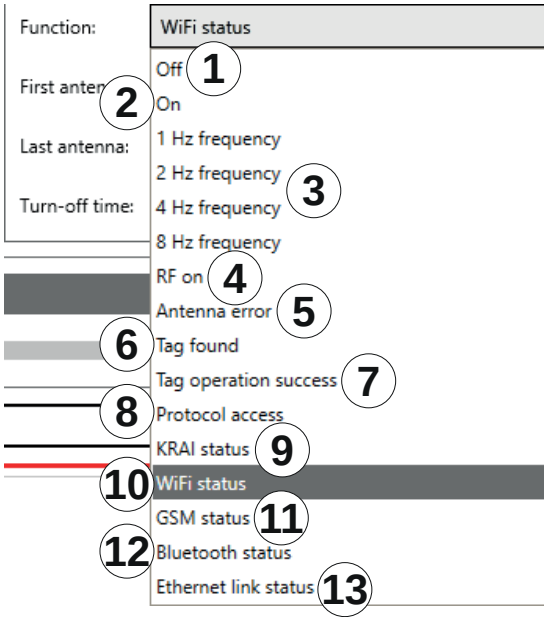

Fig. 60: LED: functions

①	*Off*	deactivates the LED
②	*On*	activates the LED (always on)
③	*1 Hz – 8 Hz frequency*	LED flashes at a frequency of 1/2/4/8 Hz
④	*RF on*	LED lights up for *Turn-off time* milliseconds if a radio frequency is present at the antenna *First antenna* to *Last antenna* has been successful
⑤	*Antenna error*	LED lights up for *Turn-off time* milliseconds if a error occurs at the antenna *First antenna* to *Last antenna*
⑥	*Tag found*	LED lights up for *Turn-off time* milliseconds as soon as a tag has been found at the antenna *First antenna* to *Last antenna*
⑦	*Tag operation success*	LED lights up for *Turn-off time* milliseconds if a tag operation at the antenna *First antenna* to *Last antenna* has been successful
⑧	*Protocol access*	enables the protocol to switch the LED on and off
⑨	*KRAI status*	shows whether a @KRAI antenna is connected to the reader
⑩	*Wi-Fi status*	shows the Wi-Fi status flashing: trying to connect permanently lit: connected off: Wi-Fi disabled
⑪	*GSM status*	shows the GSM status flashing: trying to connect permanently lit: connected off: Wi-Fi disabled
⑫	*Bluetooth status*	shows the Bluetooth status flashing: trying to connect permanently lit: connected off: Wi-Fi disabled

⑬	*Ethernet link status*	shows the Ethernet connection status

16.5 RSSI LED Bar (received signal strength indicator)

This menu is used to determine the strength of the received signal.

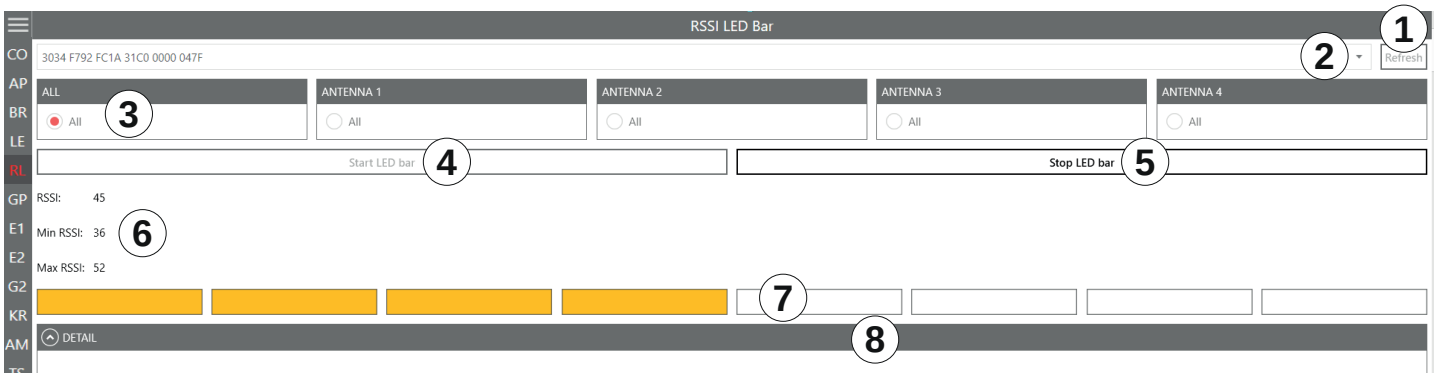

Fig. 61: RSSI LED Bar

①	*Refresh*	updates the number of detected tags
②		selects a tag from the number of the detected tags by means of the drop-down menu
③	*All/Antenna 1–4*	selects whether the tag has to be read on all antennas or only one antenna
④	*Start LED bar*	measures the signal strength
⑤	*Stop LED bar*	stops the measurement
⑥	*RSSI, Min. RSSI, Max. RSSI*	shows the current RSSI value as well as the minimum and the maximum RSSI values
⑦		shows the read range by means of the coloured bars
	green	signal strength is high (high RSSI value)
		signal strength is medium (medium RSSI value)
	red	signal strength is low (low RSSI value)
⑧	*Details*	shows detail information about RSSI for each antenna and property

16.6 GPIO Functions

Readers with GPIO functionality[1)] offer the possibility to set up small controls which trigger the reader, for instance by means of a light barrier, or which trigger an action at the outputs of the reader by reading specific tags. Such an action can switch an output to control the flow of goods.

The GPIO tab allows the reader to interact with its environment. The GPIO function tab allows the user to manually read or switch inputs and outputs of the respective application. For more complex procedures, it is possible to create action lists which execute a sequence of commands on the reader. This list can then be linked to various inputs.

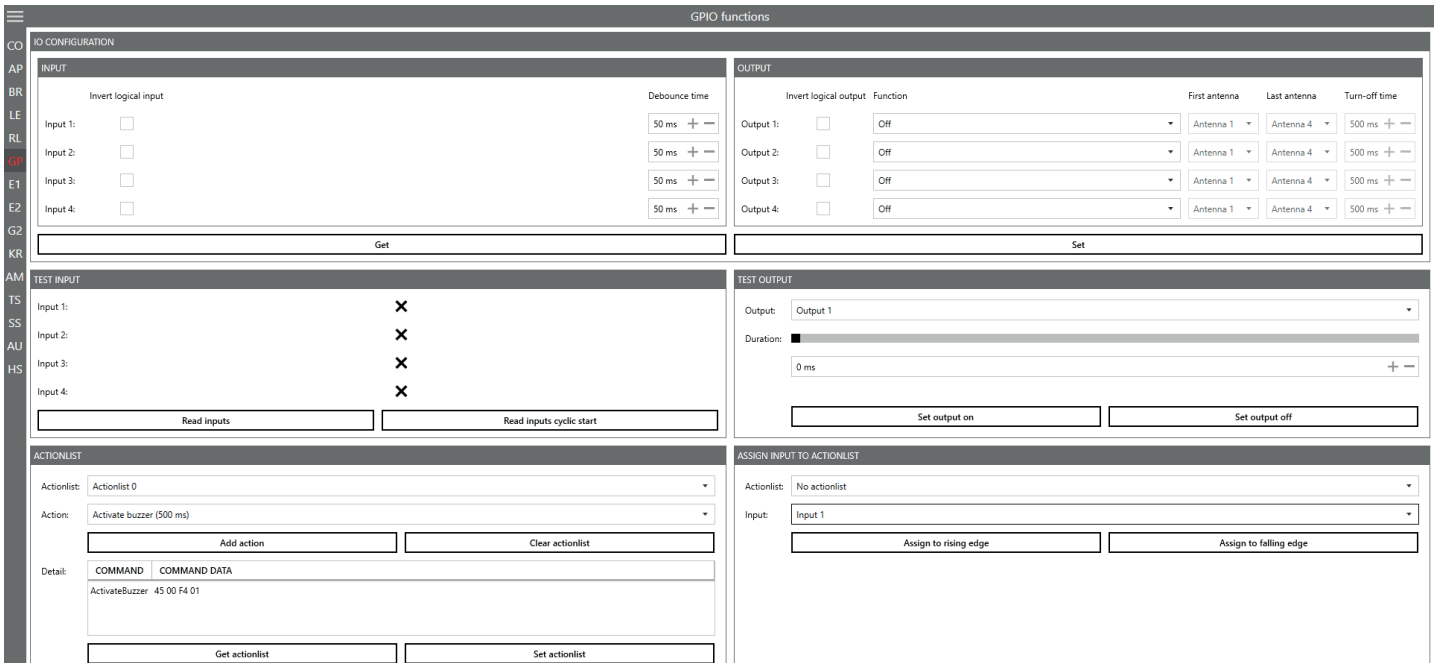

Fig. 62: GPIO

The GPIO tab is divided into 3 sections, *IO Configuration*, consisting of *Input* and *Output*, *Test Input* and *Test Output*, *Action List* and *Assign Input to Action List* which are described in the following chapters.

16.6.1 IO Configuration

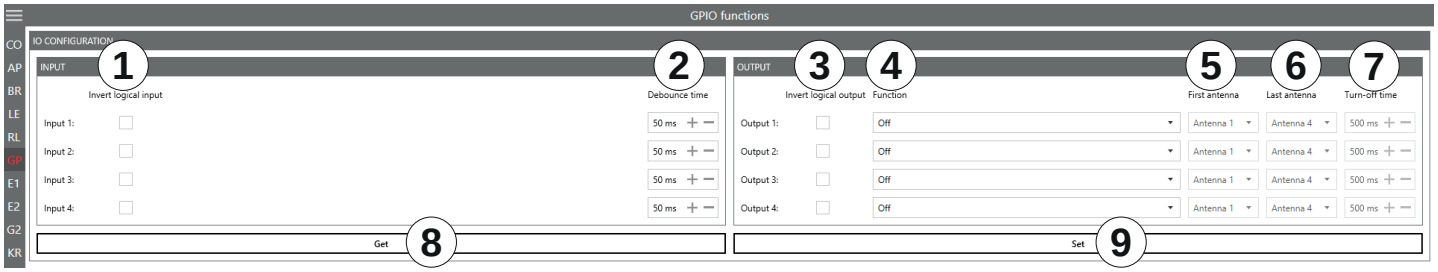

Fig. 63: GPIO: IO Configuration

①	*Invert logical input*	negates the electrical input signal and uses this state for processing in the reader; if the parameter is not checked, the signal is used
②	*Debounce time*	assigns a debounce time in milliseconds to each channel depending on the sensor being used (mechanical or electrical switch)
③	*Invert logical output*	negates the electrical output signal
④	*Function*	selects between the functions described in *Selecting Functions, p. 104*
⑤	*First antenna*	the first antenna for the selected function

[1] All Generation 3 readers have GPIO.

⑥	*Last antenna*	the last antenna for the selected function
⑦	*Turn-off time*	sets the time for how long the output is on for the *Tag found* and *Tag operation successful* function
⑧	*Get*	reads the current IO configuration settings
⑨	*Set*	sets the output settings

16.6.2 Test Input and Output

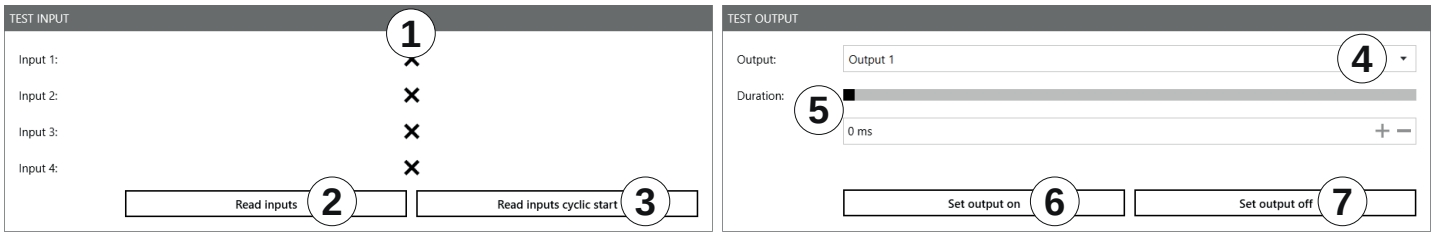

Fig. 64: GPIO: Test Input and Test Output

Test Input

Each input channel has two configuration parameters available:

①	*Input 1–4*	shows logical input 1–4; will only be shown if *Invert logical input* for the respective input has been checked at *IO Configuration* (① in *Fig. 62, p. 106*)
②	*Read inputs*	reads the inputs once
③	*Read inputs cyclic start/ stop*	reads the inputs in a loop/stops the reading

Test Output

④	*Output*	selects output 1–4 by means of the drop-down menu ► In order to use this function, select the *Protocol access* function for the respective output (see *IO Configuration, p. 106* and *Selecting Functions, p. 104*).
⑤	*Duration*	sets time in ms after which the output automatically returns to its idle mode either by moving the bar or by entering the value If the duration is set to its maximum value (65535), the output is permanently on.
⑥	*Set output on*	switches on the output
⑦	*Set output off*	switches off the output

16.6.3 Action List and Assign Input to Action List

To automate the processes, it is possible to store command sequences on the reader in the form of action lists. These are triggered by a change of edge at the selected input.

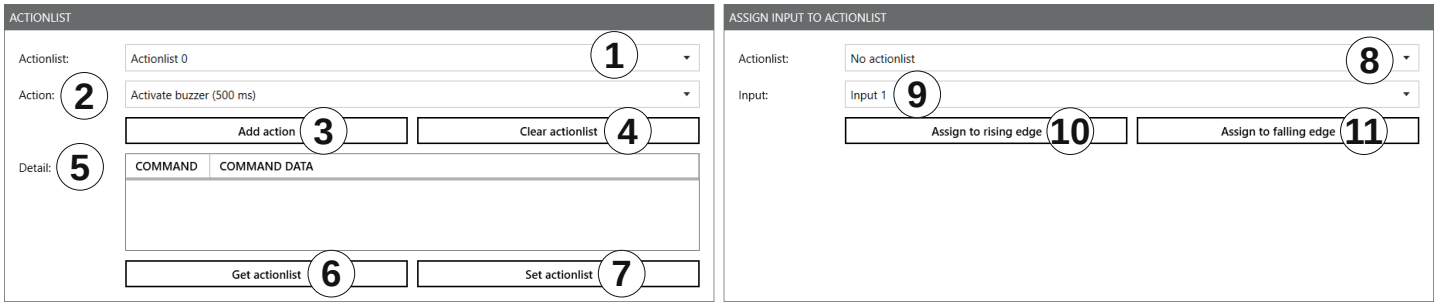

Fig. 65: GPIO: Action List and Assign Input to Action List

Action List

Each input channel has two configuration parameters available:

①	*Action list*	selects an action list (0–127) from the drop-down menu to save the action in
②	*Action*	selects an action from the drop-down menu, e.g. *Activate buzzer (500 ms)*, *SyncGetEPCs*, *ASyncGetEPCs*, *ASyncStopCommand*; see also *Adding Actions to the Programme, p. 109* ► To see the commands contained in the current action list, type in %userprofile%\Documents\KATHREIN Solutions GmbH\ReaderStart v3 into the Windows search field.
③	*Add action*	adds action; the action is shown under *Details* (⑤)
④	*Clear action list*	deletes actions; no actions are seen under *Details* (⑤) **Tip** **To remove only one action from the list:** 1. Select an action from the list shown under *Details.* 1. Right-click on the selected action. ☒ The pop-up message *Remove entry* appears. 2. Click on *Remove entry* to delete the action. ☒ The action is deleted from the list.
⑤	*Details*	shows added actions in the chronological order as they have been selected
⑥	*Get action list*	shows the current action list
⑦	*Set action list*	saves the set action list (flashes blue after having added an action to the *Details* (⑤)

Assign Input to Action List

⑧	*Action list*	selects an action list (0–127) from the drop-down menu to assign to the input in (⑨)
⑨	*Input*	assigns the action list to input 1–4 from the drop-down menu
⑩	*Assign to rising edge*	assigns the action list to the rising edge
⑪	*Assign to falling edge*	assigns the action list to the falling edge

Tip

► If you would like to assign the action list to both the rising and the falling edge, click *Assign to rising edge* and then *Assign to falling edge*.

To cancel the assignment:

► Restart/reset the reader or select *No action list* under *Action list* (⑧).

Adding Actions to the Programme

The action lists consist of a sequence of individual actions which can be loaded in the form of an XML file in the *Action* context menu:

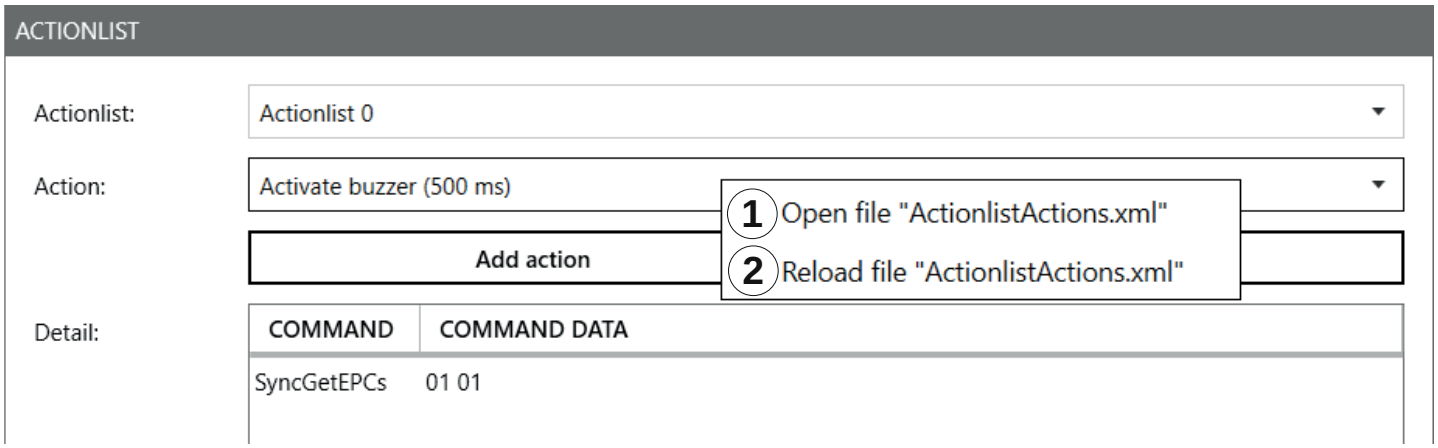

Fig. 66: GPIO: action list, action context menu

①	*Open file "ActionlistActions.xml"*	opens the actions list in the XML format in a text editor
②	*Reload file "ActionlistActions.xml"*	reloads the action list; it is necessary to reload the action list after a new action has been added to the XML file containing the actions or some changes have been made in it

The ReaderStart creates a directory in which the system variables are stored in the folder %userprofile%\Documents\KATHREIN Solutions GmbH\ReaderStart v3. It is possible to edit the ActionlistActions.xml file manually using a text editor.

► To see the individual actions, refer to the *Configuration Protocol*.

The approximately 150 reader commands with corresponding variance of the parameters do not allow for a uniform list. A selection of all options is extensive. Therefore, it is recommended to only list commands required in the application.

The following example demonstrates the syntax of the actions:

```
<ActionlistActions>
        <!--Activate buzzer for 500 ms, CommandID: 0x0045, Parameter: 0x01F4-->
        <Action>
                <Description>Activate buzzer (500 ms)</Description>
                <CommandID>0045</CommandID>
                <!--LSB first-->
                <Parameter>F4</Parameter>
                <Parameter>01</Parameter>
        </Action>
```