KALEE

CHEVY SILVERADO

12V POWER TRUCK

model #KL-7018F

Age:3-7 30 Kg /66lbs 12V BC

Support email: serviceusa@kalee.com
Support Phone: 800 213 6378

CONSUMER ASSISTANCE

If you have any missing or damaged parts or need assembly assistance, please contact our service center directly. Do not return this product to the retailer, they do not stock replacement parts.

CHEVROLET

Assembly Instruction Video

www.kaleeproducts.com

OFFICIAL
LICENSED PRODUCT

Please read this instruction manual before assembling the product. All assembly should be completed by an adult.
12V battery and charger included. 12V battery must be fully charged before use.
General Motors Trademarks used under license to Kalee Children's Products Co., Ltd.

BATTERY WARNINGS:

⚠ DANGER:

To prevent electric shock, do not immerse in water; wipe clean with a damp cloth.

⚠ CAUTION:

Use the charger in dry locations only.

BATTERY CARE:

- The battery must be handled by adults only. The battery is heavy and contains sulfuric acid.
- If the battery begins to leak, avoid contact with the leaking acid and place the battery in a plastic bag. If acid comes in contact with skin, eyes, or is internally ingested contact a physician immediately. See section titled “Battery Disposal” for proper disposal instructions.
- Never allow the battery to discharge completely. Battery should be charged before it is completely drained.
- Charge the battery before storing the vehicle.
- Fully charge the battery at least once per month, even if the product hasn’t been used. Leaving the battery in a discharged state can shorten the life of the battery.
- Charge the battery after each use, regardless of how long the vehicle was used.
- Store the battery in temperatures between 35 °F (1.7 °C) and 77 °F (25.0 °C) for optimal performance.
- Never charge the battery longer than 12 hours.

⚠ DANGER/POISON:

- The battery contains corrosive acid that can cause blindness or burns. Contact physician immediately if exposed.
- Keep out of reach of children.
- Do not open battery.

⚠ WARNING:

TO PREVENT FIRE, EXPLOSIONS OR SERIOUS INJURY

- Read the safety instructions on the battery.
- Examine the battery, charger, and all connections for excessive wear or damage before each use. Do not use if damage or wear is found. Replace immediately.
- Always secure the battery using the battery retainer.
- Only carry the battery by holding onto the main casing.
- Never modify the electrical system.
- Use only Kalee battery and charger specifically meant for this product.
- Do not use Kalee components in other battery operated vehicles/toys.
- Do not touch motor after prolonged periods of use. Motor housing may be hot. Handle carefully.
- Rechargeable batteries are only to be charged by adults.
- This product can expose you to chemicals including Lead, which is known to the State of California to cause cancer and birth defects or other reproductive harm. For more information go to: www.P65Warnings.ca.gov

BATTERY DISPOSAL:

1. Recycle or dispose of non-spillable sealed lead-acid battery in an environmentally sound manner.
2. Do not dispose of your lead-acid battery in a fire. The battery may explode or leak.
3. Do not dispose of your lead-acid battery in your regular household trash. The incineration, landfilling, or mixing of sealed lead-acid batteries with household trash is prohibited by law in most areas.
4. Return an exhausted battery to a federal or state approved lead-acid battery recycler, such as a local seller of automotive batteries. Contact your local waste management officials for other information regarding the environmentally sound collection, recycling and disposal of lead-acid batteries. If you live in the State of Florida or the State of Minnesota, it is prohibited by law for anyone to throw away lead-acid batteries in the municipal waste stream.

⚠ ATTENTION: TO CONSERVE BATTERY LIFE:

Power vehicle OFF after every use.

ON / OFF Switch

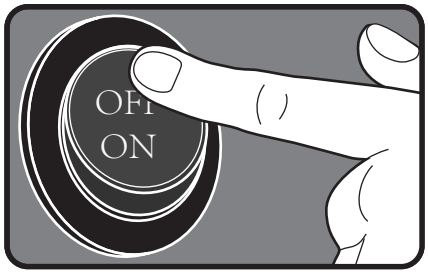

BATTERY CHARGING:

To recharge battery

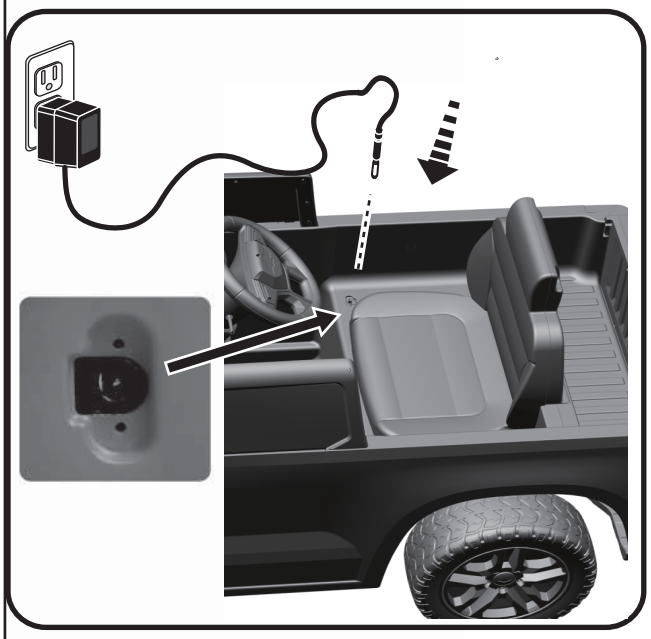

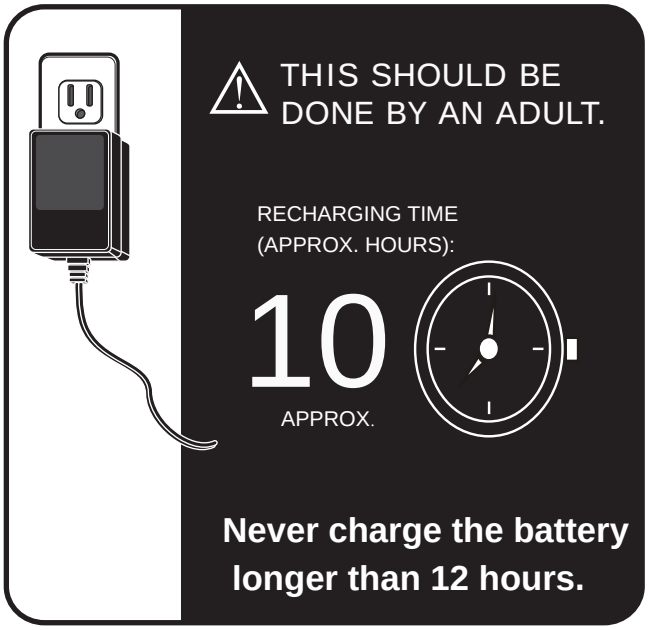

1. Only use the provided Kalee 14 volt charger to charge the 12 volt battery. Power source or wall outlet must be 120 VAC and 60Hz. If the wall outlet is controlled by an on/off switch ensure that the switch is on.
2. Charge the battery after every use.
3. Never charge the battery longer than 12 hours. Failure to follow these instructions may damage your battery.
4. Once the battery is completely charged, disconnect the charger from the wall outlet and remove the charger plug from the battery.
5. The battery does not need to be removed from the vehicle. Keep the battery in the rear compartment when charging.
6. Before charging the battery, examine the battery case for cracks and other damage which may cause sulfuric acid to leak. If damage is detected, please call Customer Service immediately and do not use the product any further.

BATTERY SPECIFICATION:

12V/7AH

INPUT
100-240V~50-60Hz

IMPORTANT! THIS PRODUCT SHOULD ALWAYS BE USED UNDER ADULT SUPERVISION.
This item may only be used with a rechargeable 12V/7Ah. battery and 14V battery charger.
Battery Type: Sealed lead-acid rechargeable, 12 Volt 7Ah
Power input for Charger: A/C 100-240 Volts, 50/60 Hz
Power output to Battery: DC 14Volts, 1000mA

•NOMINAL VOLTAGE: 12V ⎓ ONLY CHARGE THE BATTERY IN A WELL-VENTILATED AREA AWAY FROM HEAT SOURCES AND FLAMMABLE MATERIALS.

1 BOM

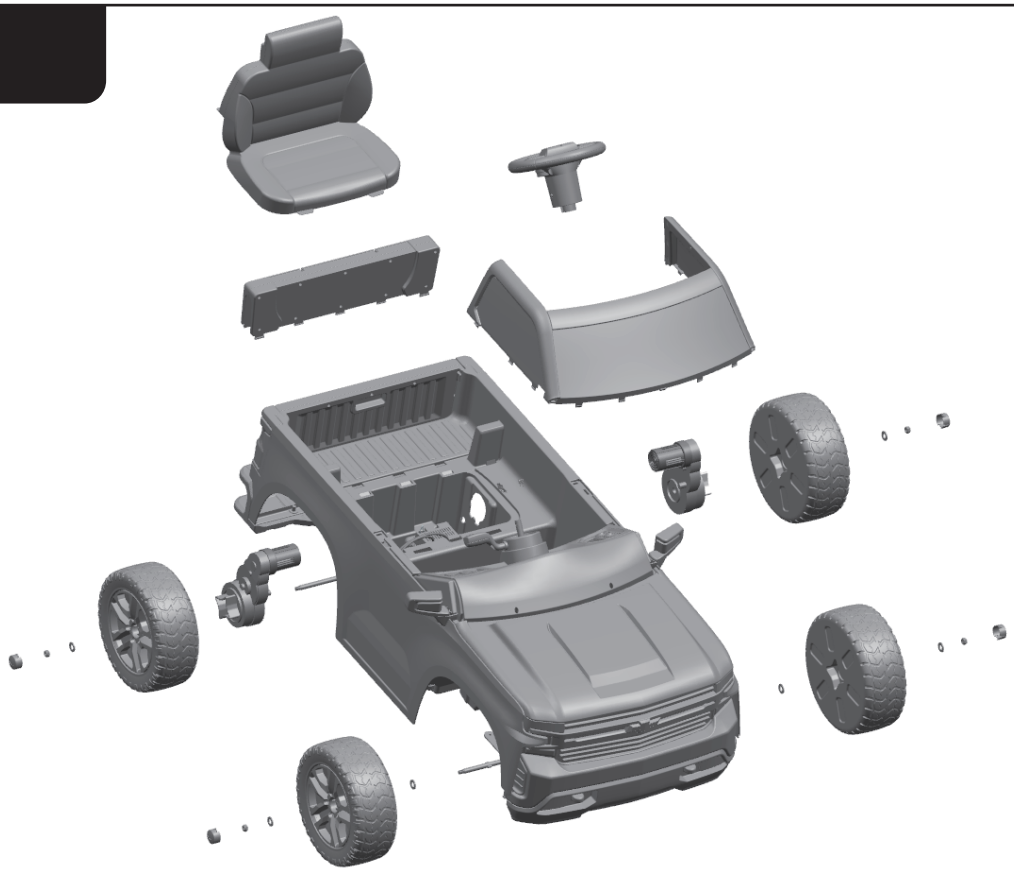

2 Tools Required: not included

screwdriver

coin

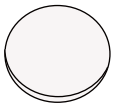

Included:

701817 (x2)

3

701801 (x1)

701802 (x1)

701803 (x1)

701804 (x1)

701805 (x1)

701806 (x4)

701807 (x4)

701808 (x2)

701809 (x4)

701810 (x4)
M8

701811 (x1)
M5

701812 (x1)
PM5*47*8

701813 (x2)
PT3.5*12*6.5

701814 (x1)

701815 (x1)

Spare Hardware (for future use) : Please keep them away from small children.

701809 (x2)

701810 (x1)
M8

701811 (x1)
M5

701813 (x1)
PT3.5*12*6.5

4 ⚠ WARNING:

ADULT ASSEMBLY REQUIRED.

Choking hazard to children under the age of 3 years – contains small parts prior to assembly. All fasteners should be fully tightened. Children should not handle parts, including the battery and electrical components, or help with assembling the vehicle.

Please keep instructions for future reference.

5

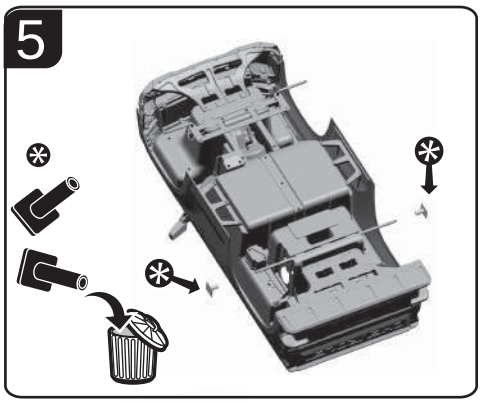

6

701817 (x2)

701806 (x2)

701808 (x2)

701809 (x2)

701810 (x2)

M8

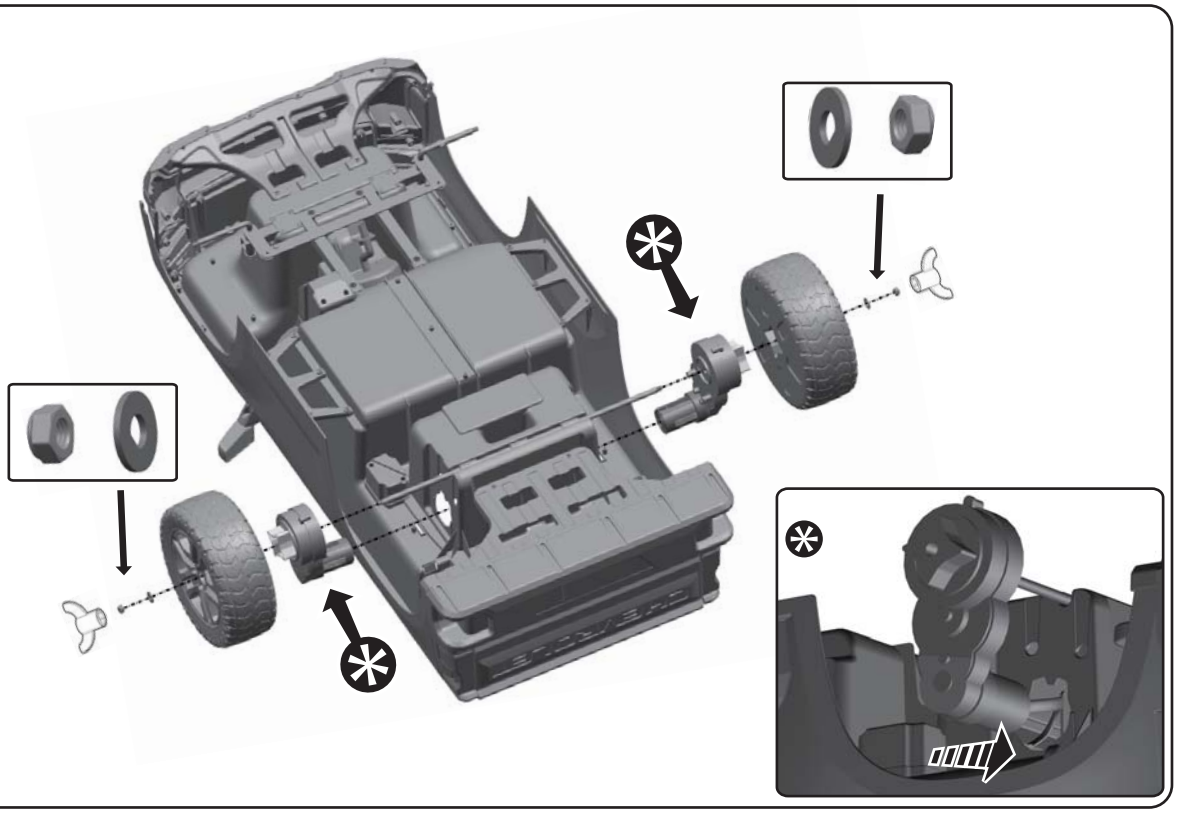

7

701817 (x2)

701806 (x2)

701809 (x2)

701810 (x2)

M8

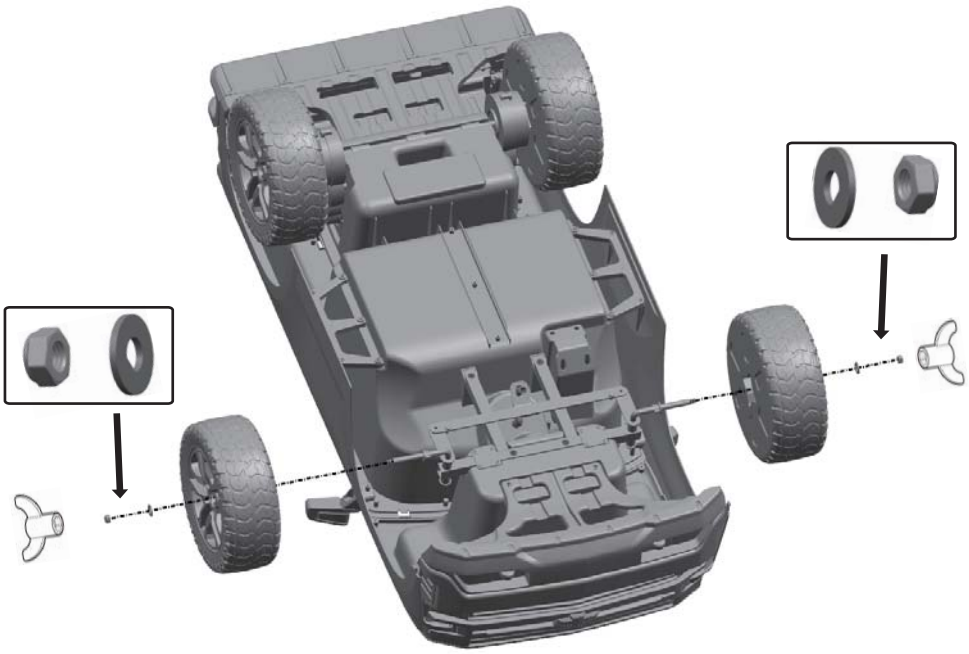

8

SNAP!
701807 (x4)

9

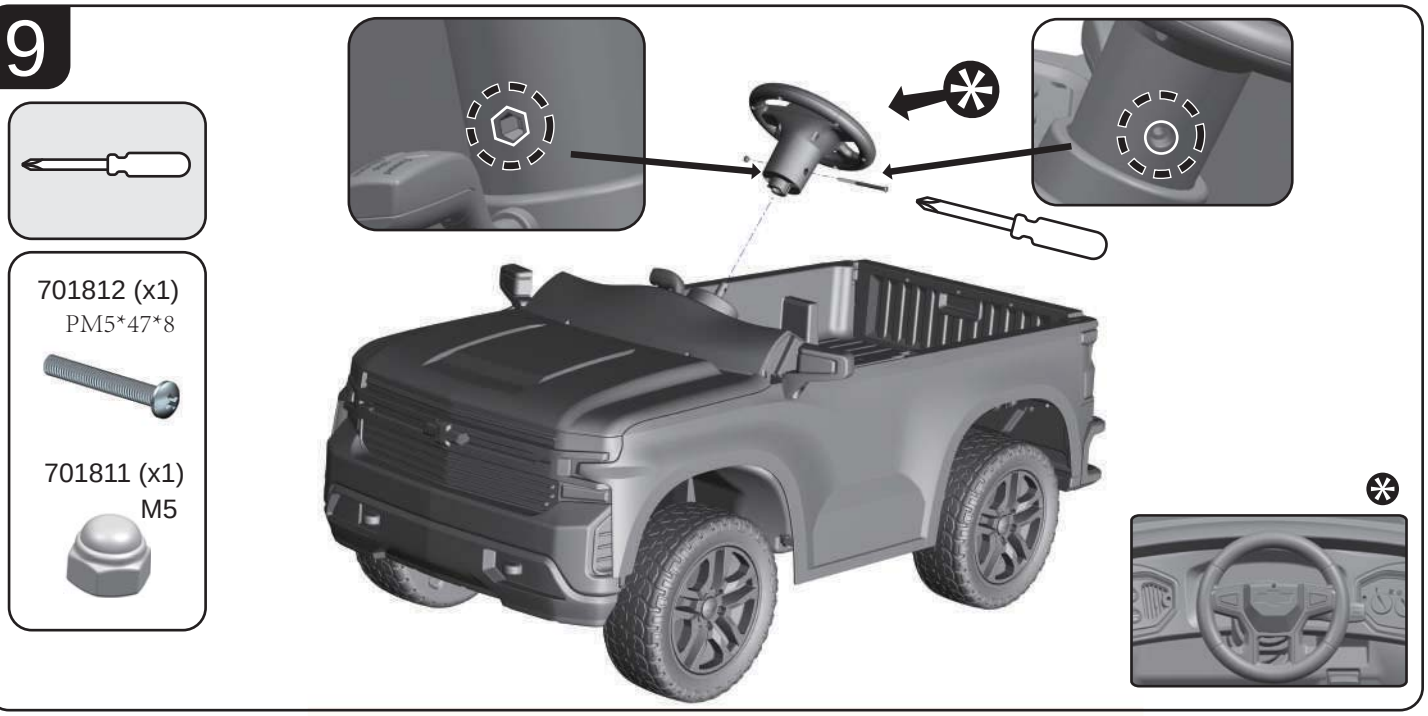
701812 (x1)
PM5*47*8
701811 (x1)
M5

10

SNAP!

11

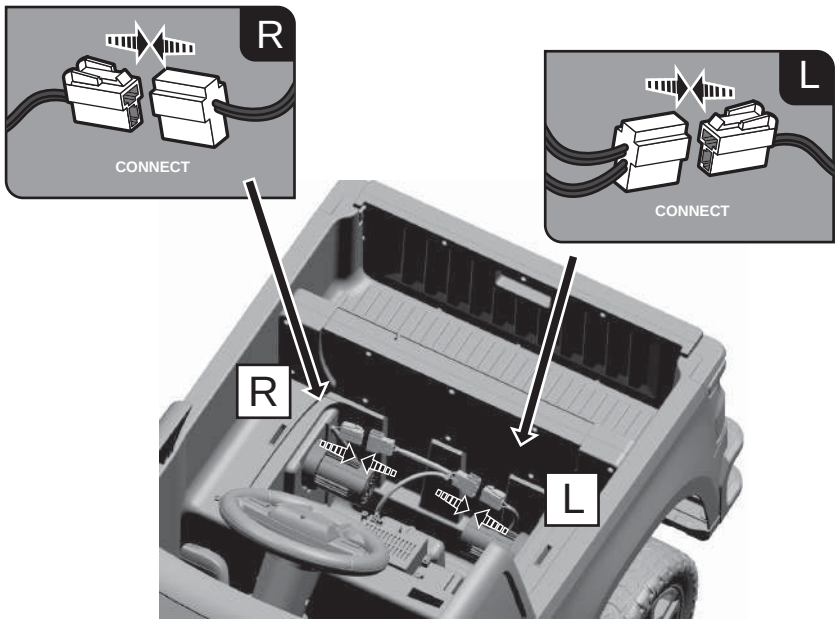
R
CONNECT
L
CONNECT
R
L

12

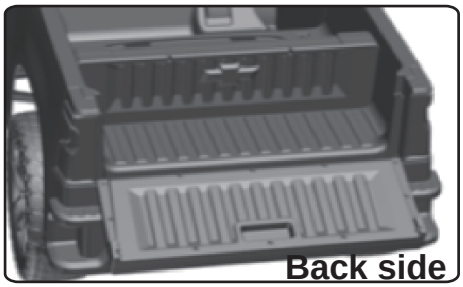

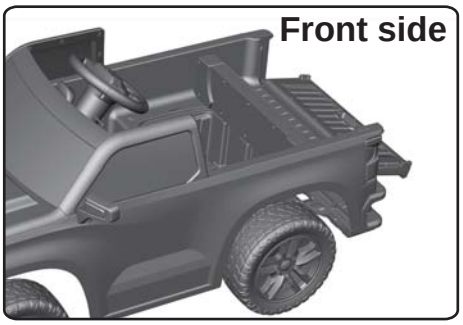

13

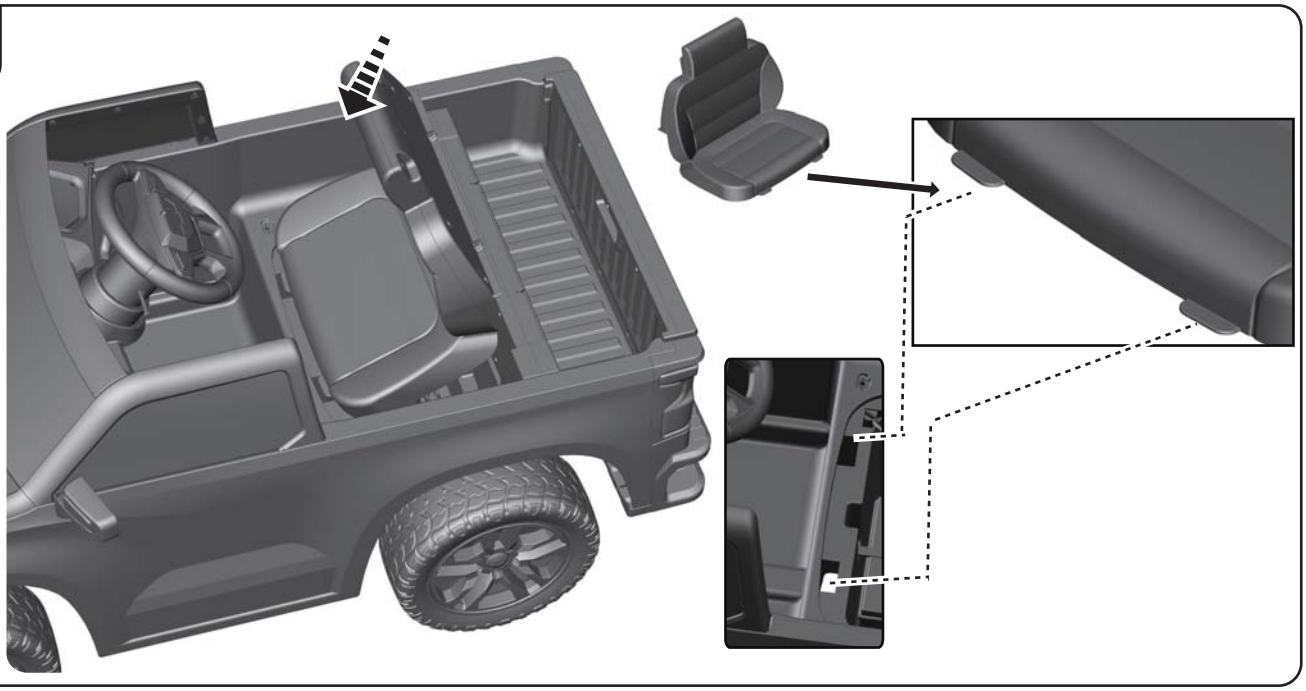

14

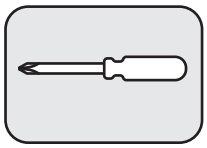

701813 (x2)
PT3.5*12*6.5

15

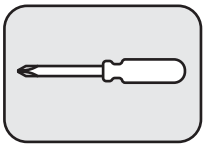

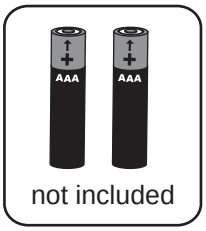

not included

• Requires 2 "AAA" (called LR3 in some countries) batteries. Install new batteries as shown in the polarity diagram(+/-) inside battery compartment.

⚠ THIS SHOULD BE DONE BY AN ADULT.

Batteries to be inserted with the correct polarity.

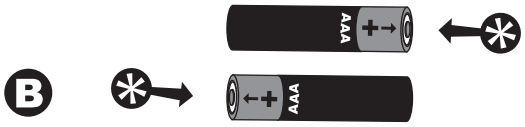

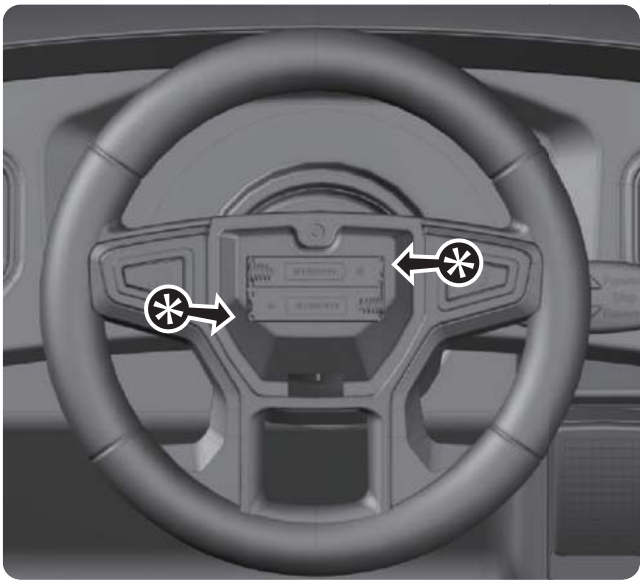

16

• **12V battery must be fully charged before use.**

OPERATION OF THE VEHICLE

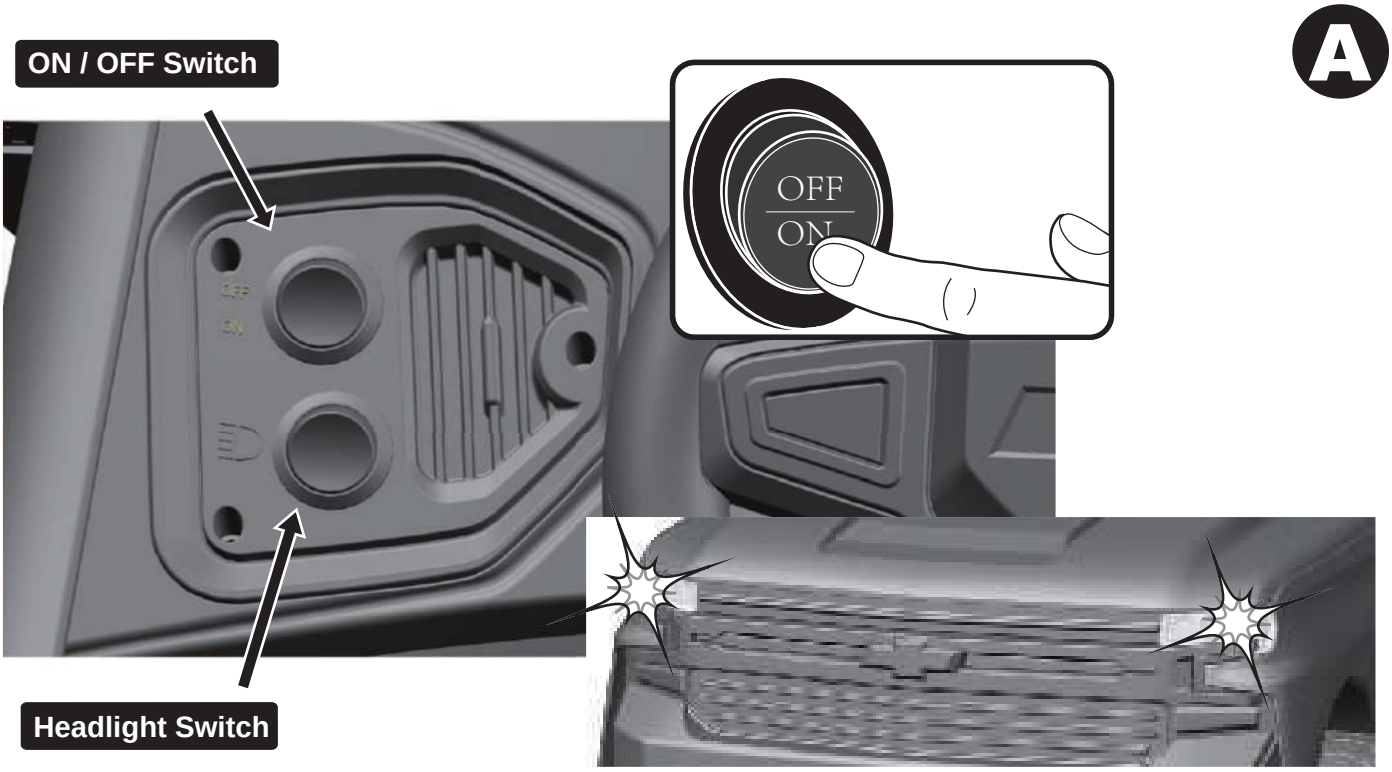

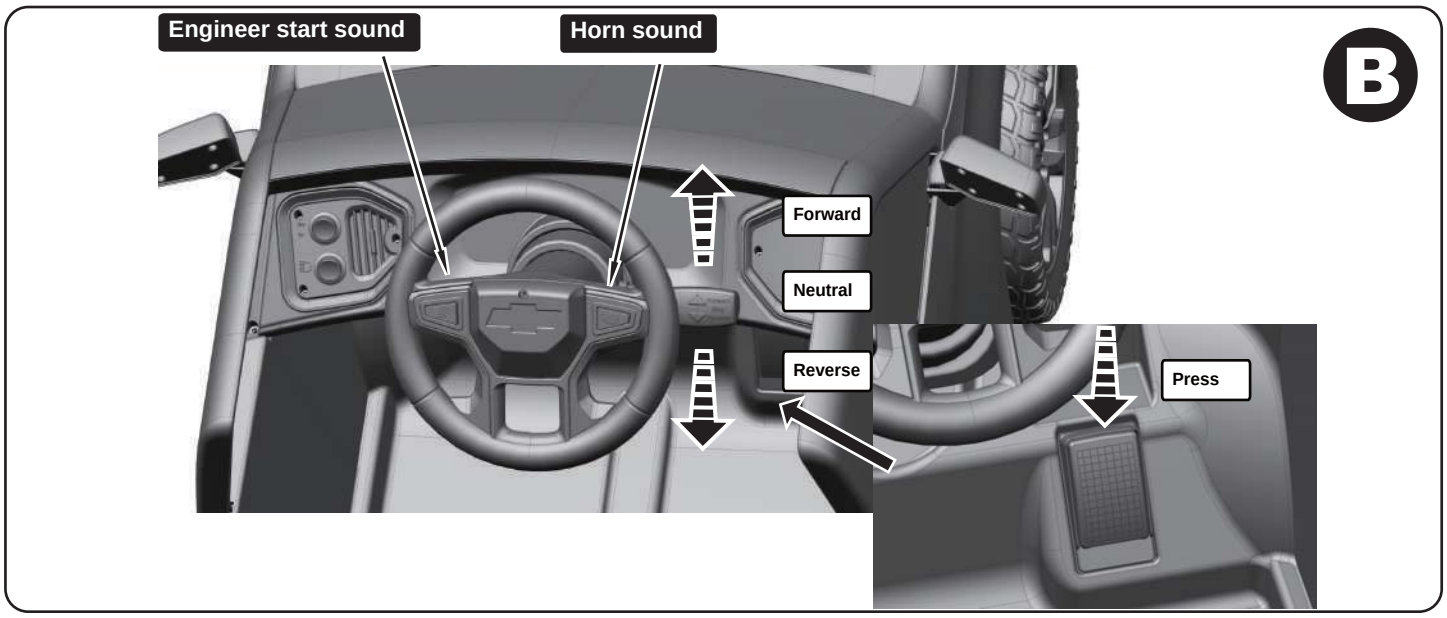
B
Engineer start sound
Horn sound
Forward
Neutral
Reverse
Press

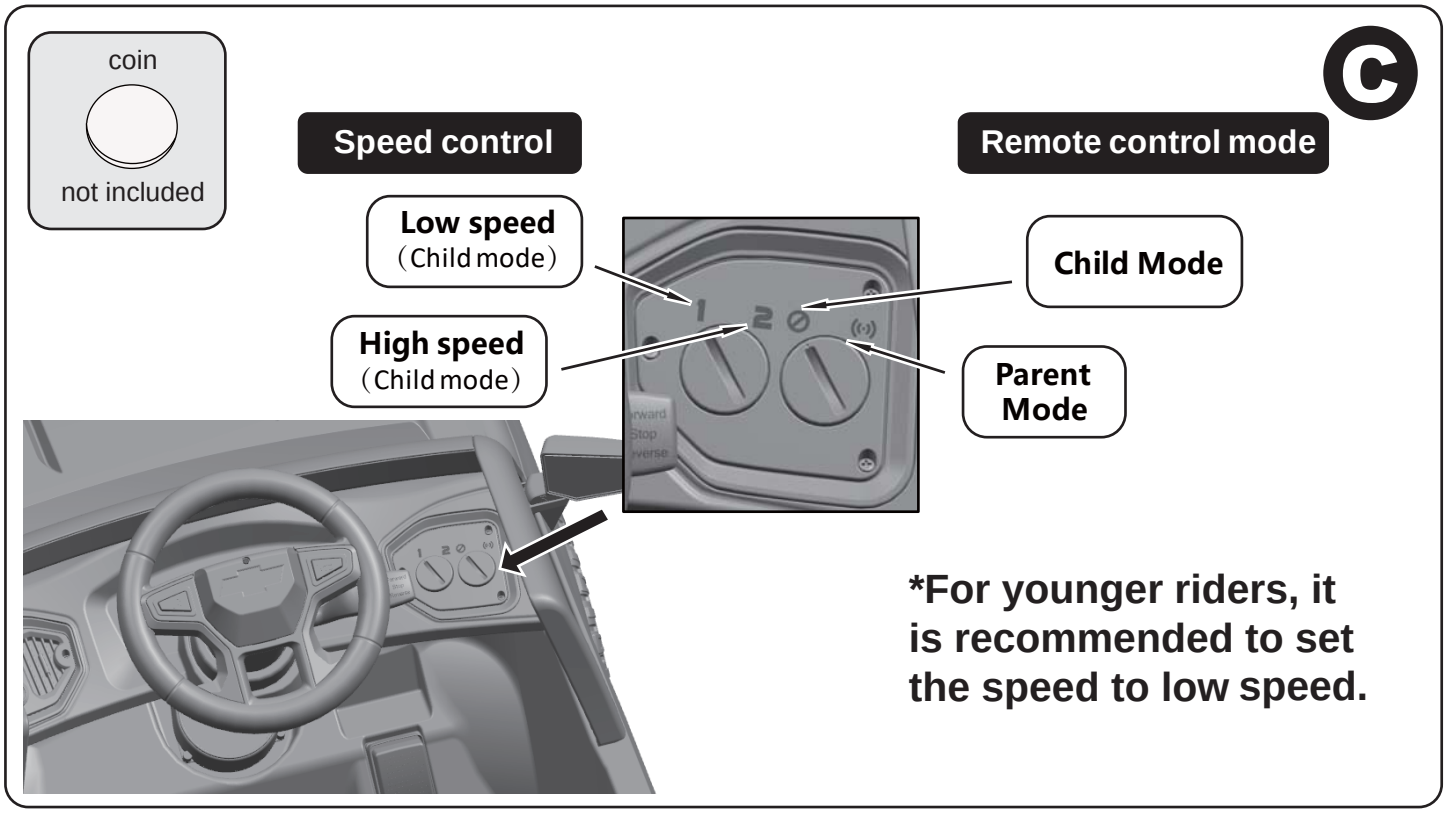
C
coin
not included
Speed control
Remote control mode
Low speed
(Child mode)
High speed
(Child mode)
Child Mode
Parent Mode
*For younger riders, it is recommended to set the speed to low speed.

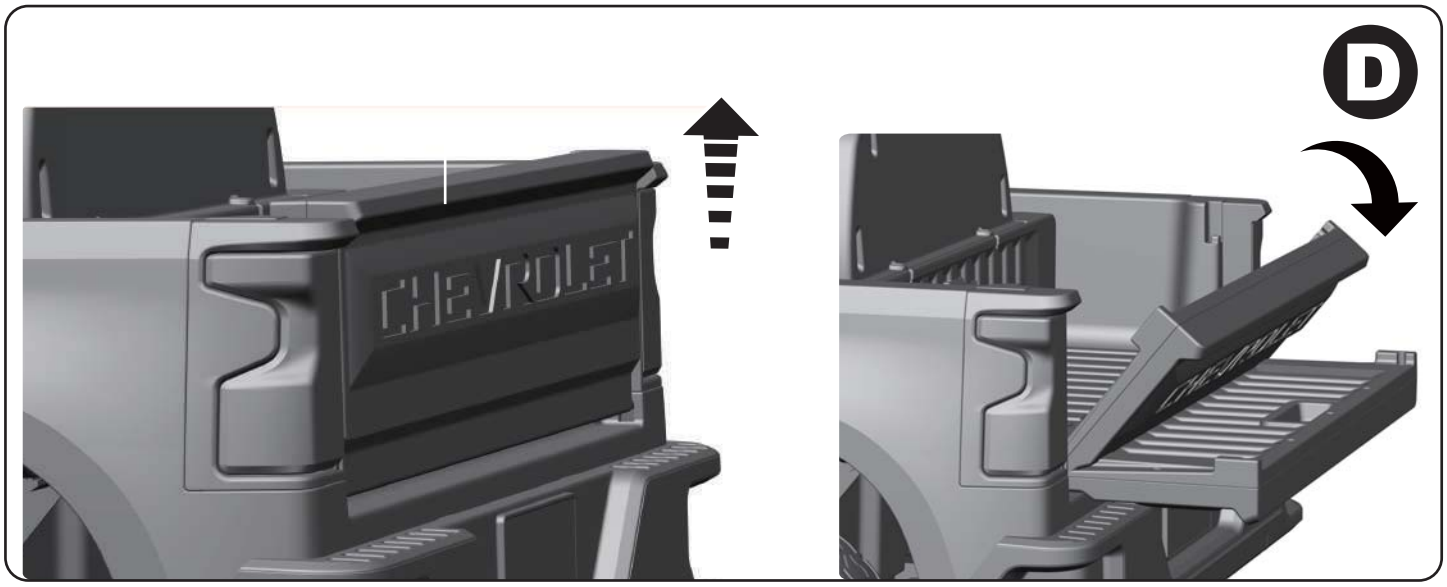
D
CHEVROLET

Parent Remote Control Operations:

BUTTON FUNCTION

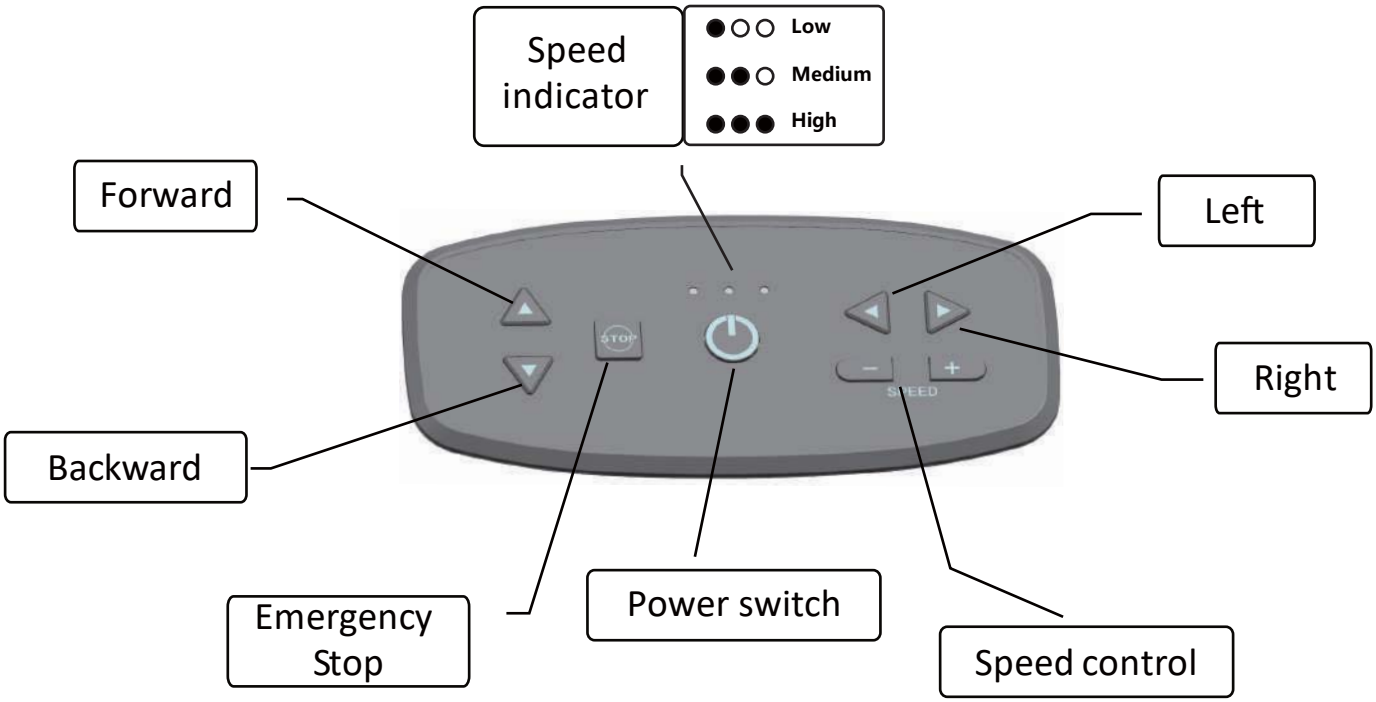

Battery Installation

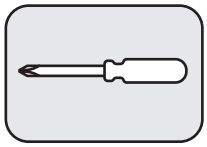

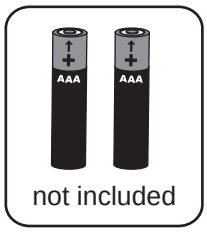

Batteries to be inserted with the correct polarity.

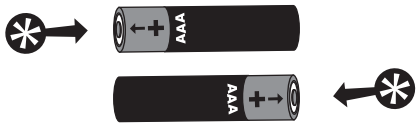

• Requires 2 "AAA" (called LR3 in some countries) batteries. Install new batteries as shown in the polarity diagram(+/-) inside battery compartment.

⚠ THIS SHOULD BE DONE BY AN ADULT.

To pair parent remote control to vehicle:

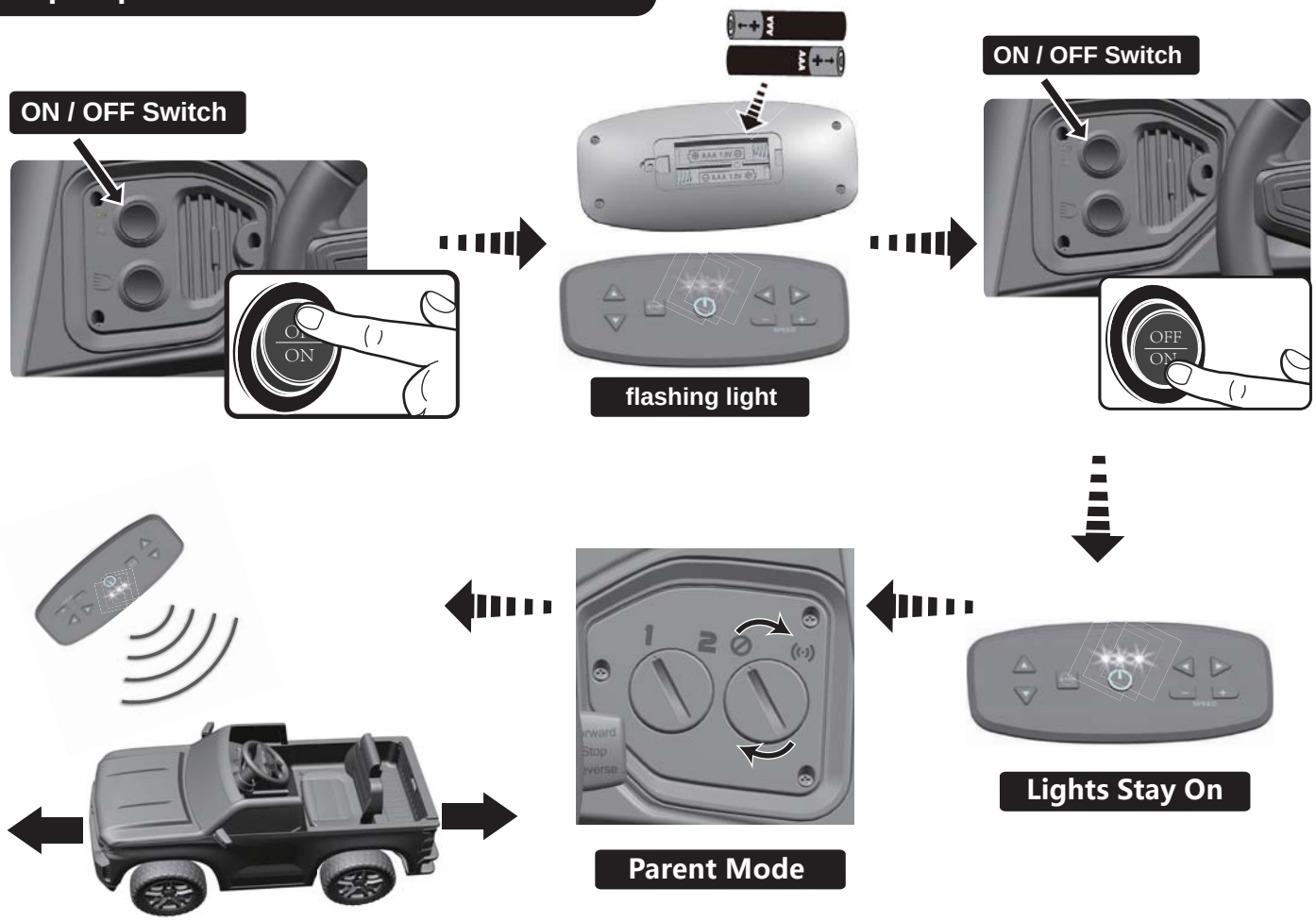

VEHICLE CARE:

MAINTENANCE INSTRUCTIONS:

1. Oil or grease moving parts periodically.
2. Check nuts and bolts often and tighten if necessary.
3. Any parts showing evidence of wear should be replaced immediately.
4. It is the responsibility of the adult who assembles this product to properly install all parts included in the carton. These instructions are valuable.
5. Check all screws and their protective coverings regularly and tighten as required. Check plastic parts on a regular basis for cracks or broken pieces.
6. During snowy or rainy weather, the vehicle should be stored inside.
7. Avoid operating the vehicle in wet or snowy conditions. Do not clean the vehicle by spraying with a hose. Water or moisture in the seat compartment can cause the motor and other electrical components to corrode. Corrosion can result in electrical component failure.
8. Avoid operating the vehicle on sand, loose dirt, or gravel. Debris from this type of terrain can cause the motor and other electrical components to fail.
9. To clean the vehicle use a dry cloth. A non-wax furniture polish can be used to clean plastic parts. Do not spray the vehicle with a hose or submerge in water.

GUIDELINES FOR SAFE DRIVING:

1. Before children use this vehicle, an adult should carefully evaluate the driving area as well as the child's ability to drive the vehicle safely. Teach appropriate safety rules to your child before allowing operation of this vehicle. These rules should also be reviewed with other children who want to drive the vehicle.
2. Remain seated. A child who is not sitting on the seat when the vehicle is in motion could fall or cause the vehicle to tip over.
3. Do not operate the vehicle at night.
4. Do not operate the vehicle near steep inclines as it can cause the following:
   - Unsafe speed, even if the button is released.
   - Tipping
   - Loss of traction, causing the vehicle to slip.
   - Rolling backwards at an unsafe speed.
5. Avoid contact with moving/rotating parts, such as the motor, gear box, and wheels. Contact with these parts can cause serious injury.
6. Do not operate the vehicle when it's positioned on its side or upside-down.
7. Do not operate the vehicle near flammable vapors (gasoline, paint thinner, acetone, liquid wax, etc.) as the electrical switch emits an internal spark, which could cause an explosion or fire.
8. To prevent unsupervised use of the vehicle, disconnect the motor harness from the battery when the vehicle is not in use.
9. Never allow the vehicle to be used if the seat is not connected properly.

⚠ CAUTION:

TO AVOID BATTERY LEAKAGE

- DO NOT incinerate used batteries.
- DO NOT dispose of batteries in fire.
- DO NOT mix old and new batteries or types of batteries.
- DO NOT use rechargeable batteries.
- DO NOT recharge non-rechargeable batteries.
- DO NOT short-circuit the supply terminals.
- Different types of batteries should not be mixed.
- Only batteries of the same or equivalent type as recommended are to be used.
- Exhausted batteries should be removed from the toy.
- Dispose of batteries safely.

⚠ WARNING:

TO AVOID SERIOUS INJURY:

- Continuous adult supervision required.
- Never use near motor vehicles, streets, swimming pools, hills, steps, or sloped driveways.
- Never allow more than one rider.
- Rider should always be seated.
- Always wear shoes, helmet, knee pads and elbow pads when using the toy.
- Maximum weight: 66.0 lb (30 kg).
- Periodically check hardware and tighten if necessary. Replace worn or broken parts immediately.
- Skill is required to avoid falls or collision.
- Never ride at night.
- Use the toy only on flat surfaces.

FCC Statement

Caution: Changes or modifications of this product is not expressly approved by the party responsible for compliance could void the user's authority to operate the equipment.
NOTE: This equipment has been tested and found to comply with the limits for a Class B digital device, pursuant to Part 15 of the FCC Rules. These limits are designed to provide reasonable protection against harmful interference in a residential installation. This equipment generates, uses and can radiate radio frequency energy and, if not installed and used in accordance with the instructions, may cause harmful interference to radio communications. However, there is no guarantee that interference will not occur in a particular installation.
If this equipment does cause harmful interference to radio or television reception, which can be determined by turning the equipment off and on, the user is encouraged to try to correct the interference by one or more of the following measures:
-- Reorient or relocate the receiving antenna.
-- Increase the separation between the equipment and receiver.
-- Connect the equipment into an outlet on a circuit different from that to which the receiver is connected.
-- Consult the dealer or an experienced radio/TV technician for help.

This device complies with Part 15 of the FCC Rules. Operation is subject to the following two conditions: (1) this device may not cause harmful interference, and (2) this device must accept any interference received, including interference that may cause undesired operation.

This device complies with FCC radiation exposure limits set forth for an uncontrolled environment and it also complies with Part 15 of the FCC RF Rules. This equipment must not be co-located or operating in conjunction with any other antenna or transmitter. End-users and installers must be provide with antenna installation instructions and consider removing the no-collocation statement.

STOP

DO NOT RETURN THIS ITEM TO THE STORE

The store does not stock replacement parts.
Please contact service center for assistance.

Kalee Global LLC
800 213 6378
serviceusa@kalee.com
1178 Broadway 3rd floor #1059
New York , NY 10001

ATTENTION

CHARGE

Battery must be fully charged before use.