5 Windows Software Components

The following section describes the system architecture of Inter-Processor Communication on a WWAN M.2 module when connected to a Microsoft Windows® based Host OS Windows® 7, Windows® 8.x.
The software components of a WWAN M.2 module running Windows® 7 and Windows® 8 are depicted in Figure 12 and Figure 13 respectively.
In the Windows® 7 architecture:

- The Windows® 7 driver interfaces with the WWAN M.2 modem using a virtual terminal connection over CDC-ECM.
- A Third party connection manager utilized
- Independent Hardware Vendor (IHV) provided MBIM driver

In the Windows® 8 architecture:

- Microsoft requirements:
  - MBIM interfaces
  - User Mode Driver Framework (UMDF) driver for GNSS, and Firmware Update, Carrier Switching application.
  - RTD3 support

For all Windows platforms:

- The WWAN M.2 module is exposed as a composite device
- GNSS will be supported through a serial interface
- When mobile broadband is disabled, GNSS will still be available.
- The mobile network adapter driver will interface to the modem software through the MBIM interface.
- All Intel specific features will be supported through MBIM.
- The connection manager provided with Win 8 OS and above will be used. For
- Win 7, the IHV provided connection manager is used.
- There will be an application layer to hide the differences in the mobile broadband API between Win 7 and Win 8.

Reproduction forbidden without written authorization from Telit Communications S.p.A. - All Rights Reserved.

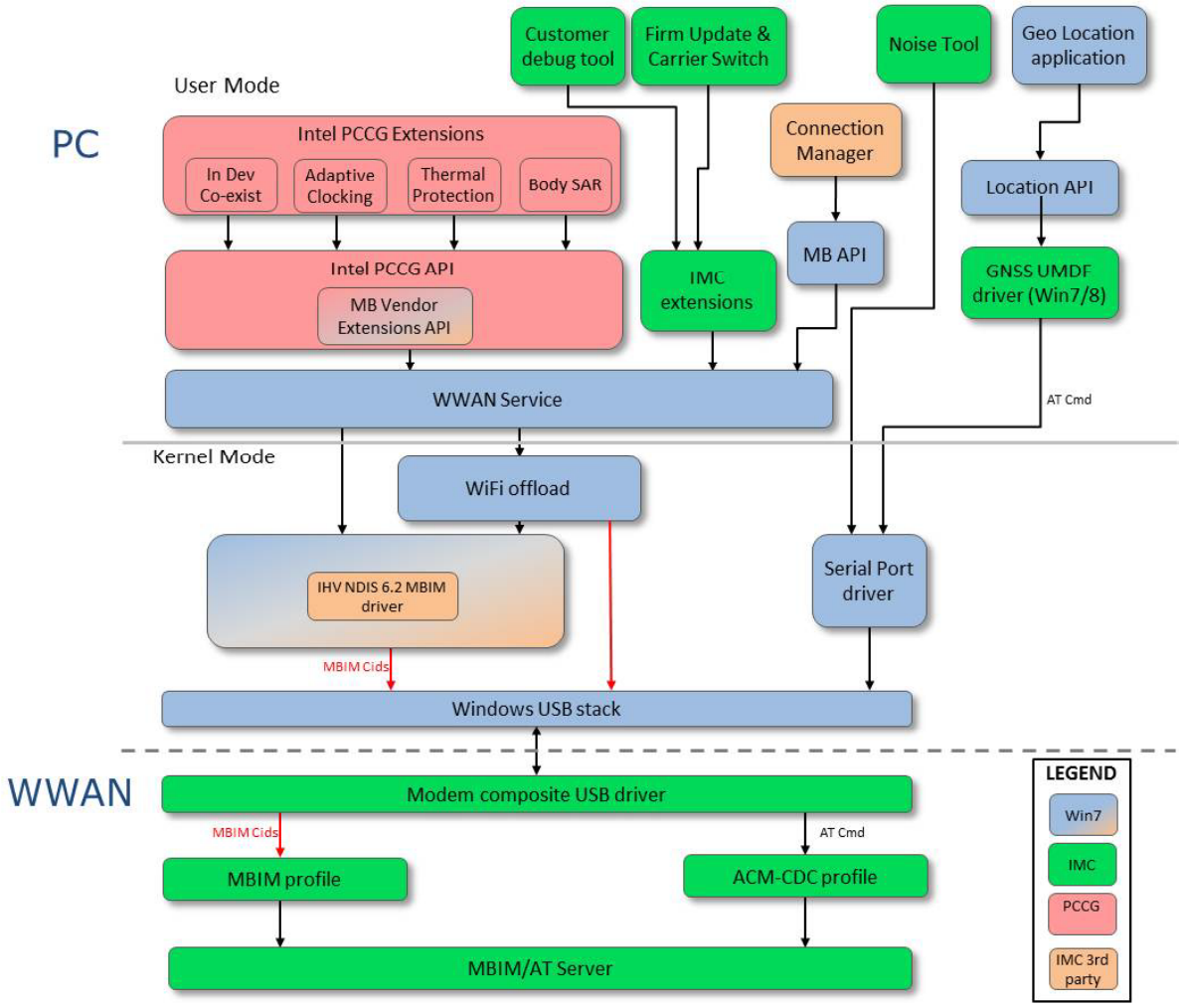

Figure 12 Windows 7 Software Architecture

Reproduction forbidden without written authorization from Telit Communications S.p.A. - All Rights Reserved.

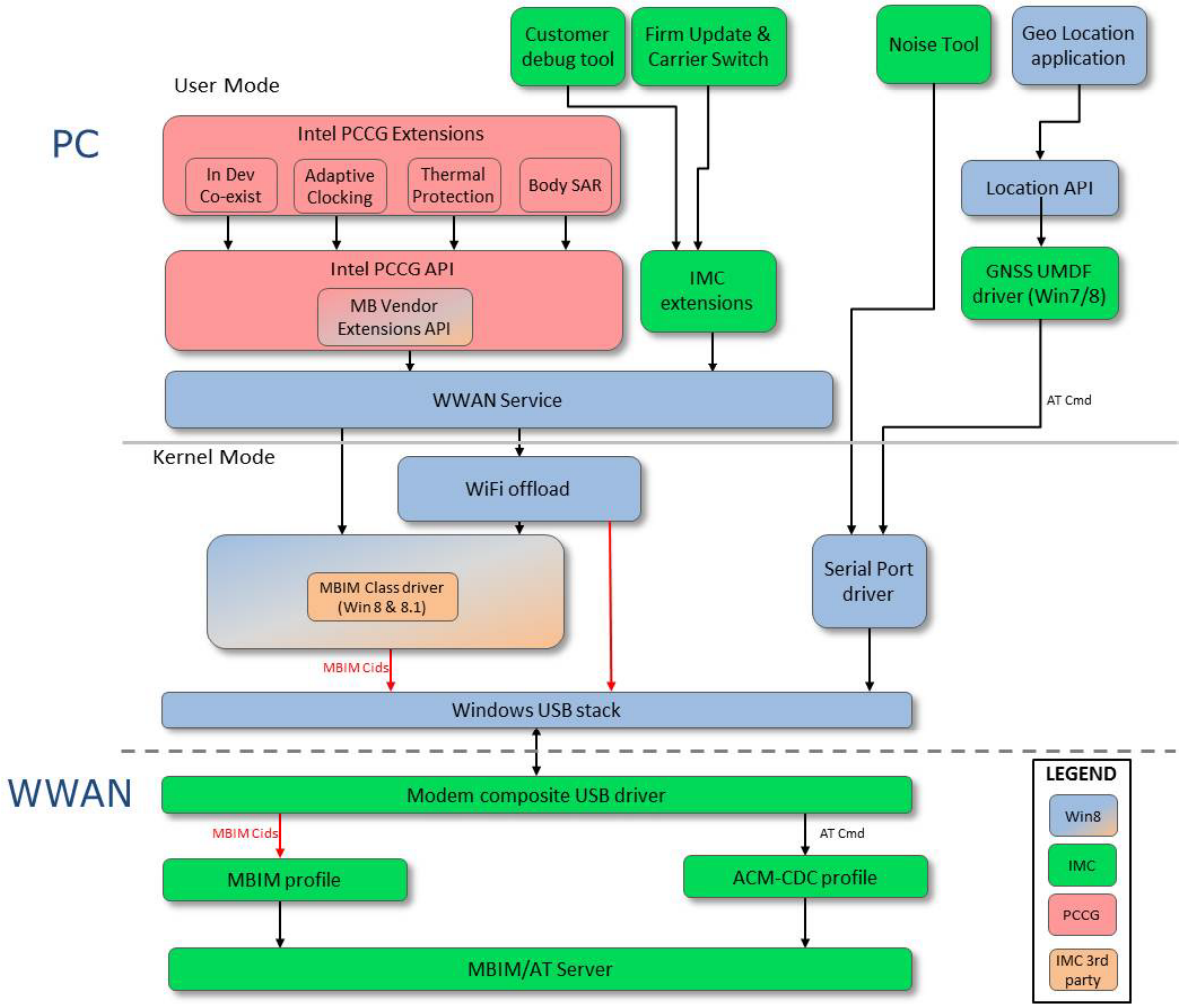

Figure 13 Windows 8 Software Architecture

Reproduction forbidden without written authorization from Telit Communications S.p.A. - All Rights Reserved.

5.1 MBIM Toolkit

5.1.1 Windows® 7 MBIM driver

In order to support both Windows® 8 and Windows® 7 (for corporate legacy applications), with a single modem architecture, IMC will provide a kernel level driver implementing the Mobile Broadband Interface Model. The driver is WHQL certified for Windows® 7.

5.1.2 GNSS UMDF driver for Windows® 7 and Windows® 8

IMC provides a GNSS "User mode" driver to enable GNSS Applications executing on Windows PC/Tablet to communicate to the GNSS device located on the M.2 module. The driver communicates to Modem module via AT commands over an ACM-CDC USB channel.

5.1.3 M.2 module Firmware Update

This is a “user friendly” Windows GUI application enabling the consumer, whose Ultrabook or tablet is hosting an Intel M.2 module, to update the firmware on WWAN module by executing a graphical application based on .NET4 framework. The same application runs on both Windows® 7 and Windows® 8 environments and its look & feel can be customized if required.

This same application is used to upgrade the standard image flashed at the factory with one that better fits the local Carrier. When a new SIM is inserted, the application will detect the inserted SIM does not match the WWAN device firmware. It will then allow the user to select and update the WWAN firmware with a suitable image reflecting the local network of the Carrier.

5.1.4 End User Trace Tool

This is a Windows® 8 application allows a M.2 end user to collect debugging information under guidance of a Customer Support operator. The log file can be sent to a Technical support center and fed into an analysis tool, such as Intel’s Mobile Analyzer application, to diagnose potential problems found in the field after module deployment.

Reproduction forbidden without written authorization from Telit Communications S.p.A. - All Rights Reserved.

6 Linux/Chrome Software Architecture

The following section describes the system architecture of Inter-Processor Communication on a M.2 module when connected to a Linux based Host OS (Android, Chrome, and Ubuntu). The description is only concerned with the HS-USB port which is the only available functional interprocessor communications (IPC) interface at run-time and takes into account only the AT control plane and IP packets data connection. Audio packet exchange is outside the scope of the current version of M.2.

6.1 Overview

Figure 14 illustrates the architecture of the IPC and its components.

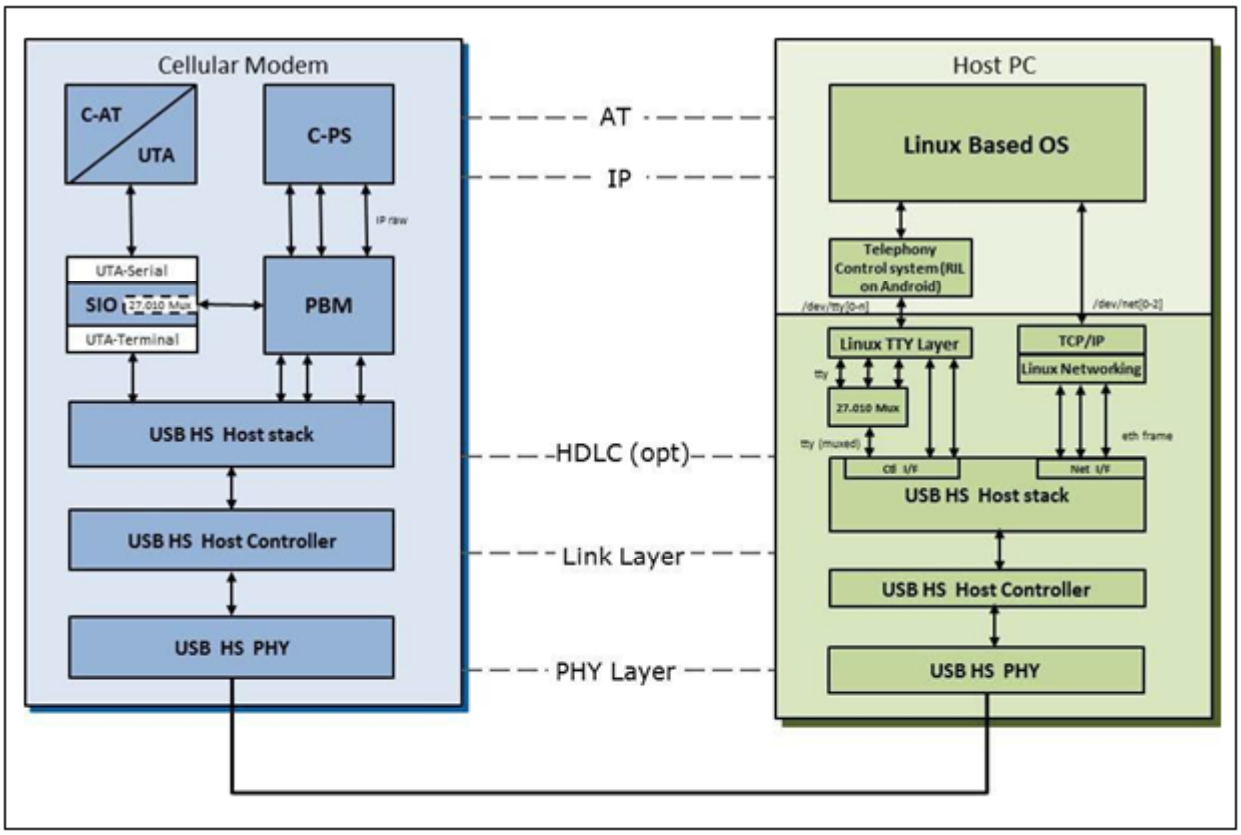

Figure 14 Linux Software Architecture

The user data is transferred from/to the cellular protocol stack (C-PS) to the IPC via a centralized memory manager. The centralized memory manager is called packet buffer manager (PBM). The user data is routed along the data plane as IP packets using several

Reproduction forbidden without written authorization from Telit Communications S.p.A. - All Rights Reserved.

logical channels. Each logical channel corresponds to a dedicated Packet Data Network (PDN) connection.
There is no TCP/IP stack on the modem side in the data path from IPC over PBM to C-PS handling IP address based routing.

The central packet buffer manager (PBM) provides a common packet buffer used between IPC and PS. No copy operation of data is necessary between cellular PS and IPC. The HS-USB interface provides a highly efficient data path via DMA with scatter/gather linked-list processing.

The control plane is using at least one dedicated channel through Serial IO component (S-IO) to the AT command handler. The interface towards the driver is called Universal Terminal Adapter (UTA)-Terminal, while the interface towards application is called UTA-Serial interface. The application in our case is the AT command handler called C-AT. The control channel is using AT commands. A detailed list of all supported AT commands can be found in a separate application note.

6.2 CMUX Multiplexer

In the context of an AT command based architecture, a SW multiplexer can be added. The SW multiplexer of the 3GPP 27.010 protocol provides a number of logical channels (DLC) which serve as AT terminals on Host PC side. These logical channels are mapped on-top of one of the control channels of the specific physical IPC interface.

The 3GPP 27.010 multiplexer protocol is a data link protocol (layer-2 of the OSI model) which uses HDLC-like framing, virtual data channels, and channels' control procedure. The protocol is implemented according to 3GPP TS27.010. It allows software applications on the Host processor to access the USB-HS port on M.2 in a concurrent way by emulating multiple virtual communication channels. The MUX protocol controls the virtual channels and conveys user data over the virtual channels.

Reproduction forbidden without written authorization from Telit Communications S.p.A. - All Rights Reserved.

6.3 USB 2.0 HS Features

The USB 2.0 HS stack is used for communication with a PC in device role.
Additional details on the USB interface can be found in Section 3.1, Interprocessor Interface.

6.4 USB Configuration

The USB feature may be configured by the UTA_USB API. The user may define different use cases, such as support of different numbers of CDC-ACM or CDC-NCM channels.

6.4.1 Modem Connection

Up to 3 CDC-ACM logical channels are available to be used as an interface for the following functionality:

- AT commands
- 3GPP 27.010 Multiplexer
- Tracing
- Connection to test framework

The ACM channels are connected via UTA-Terminal to S-IO and from there via UTA-Serial to the application on modem side.

6.4.2 Network Connection

Up to 4 CDC-NCM functions are available to be used as interface for network connections servicing for up to four PDN connections.

The NCM channels are connected via the PBM driver interface to PBM and from there via PBM service interfaces to the PTM component of C-PS.

6.4.3 Default Configuration

The default configuration is 3 CDC-ACM channels for control and trace and 4 CDC–NCM channels for data connections. A specific configuration is set via the AT+XSIO command. The detailed usage of the default configuration is:

- 1st ACM channel:: Modem Control Channel, Channel ID: USBCDC/0
- 2nd ACM channel:: Trace data, Channel ID: USBCDC/1
- 3rd ACM channel:: free, Channel ID: USBCDC/2

Reproduction forbidden without written authorization from Telit Communications S.p.A. - All Rights Reserved.

- 1st - 4th NCM channel: data channel for PDN connection: Channel ID: USBHS/NCM/0-3

6.5 LPM

The host computer can set the modem into USB sleep (L1) state (to save battery power) whenever the link is idle. To return from sleep state the host computer performs L1Resume. This can also be triggered by the modem using L1-Remote- Wake-up. The sleep (L1) state is introduced by "USB 2.0 Link Power Management Addendum" and allows fast state transitions between active and sleep states.

6.5.1 Suspend/Resume and Remote Wake-up

The PC can set the modem into USB suspend state (to save battery power) when no communication takes place or when the PC is switched into standby mode. The suspend state also can be triggered by X-GOLD™ Baseband device through a proprietary device initiated selective suspend mechanism. The wake up is performed by Host Resume. The modem can wake up the host computer from standby state using Remote Wake-up

6.5.2 Android Software Components

The software components of a WWAN M.2 module running the Android operating system is shown Figure 15.

- Android version 15/16 will be supported.
- Intel Intrinsic Radio Interface Layer (RIL) will be used and supported via a USB CDC-ACM driver.
- All Intel features will be supported via AT commands.
- Advanced Linux Sound Architecture (ALSA) will not be supported on data only WWAN M.2 modules.

Reproduction forbidden without written authorization from Telit Communications S.p.A. - All Rights Reserved.

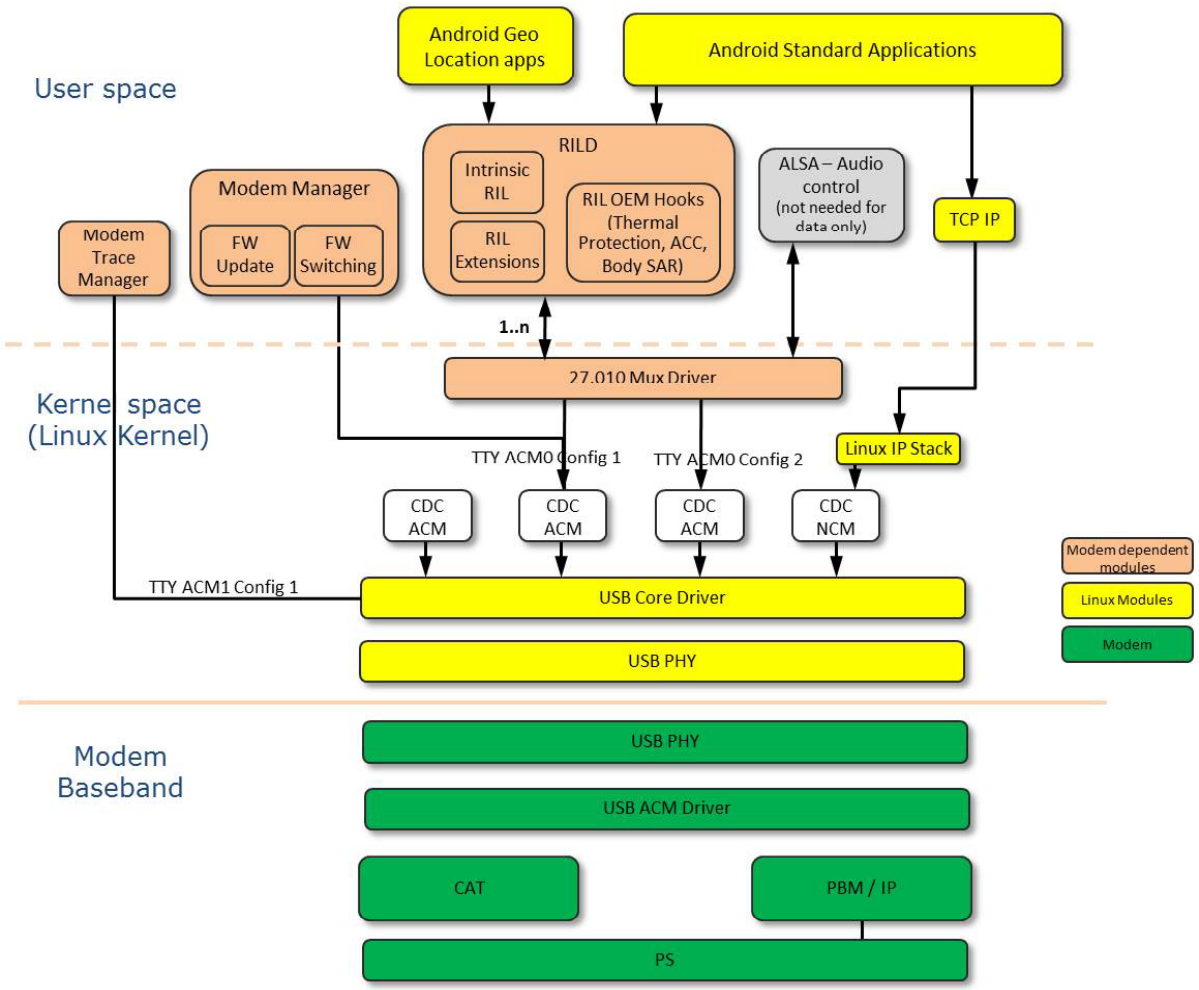

Figure 15 Android Software Architecture

6.5.3 Chrome Software Components

A preliminary view of the software components of a WWAN M.2 module running the Chrome operating system is shown in Figure 16. The architecture is still in development; however, it is expected that:

- Intel Intrinsic Radio Interface Layer (RIL) will be used and supported via a USB CDC-MBIM driver.
- All Intel features will be supported via MBIM commands.
- Advanced Linux Sound Architecture (ALSA) will not be supported on data only WWAN M.2 modules.

Reproduction forbidden without written authorization from Telit Communications S.p.A. - All Rights Reserved.

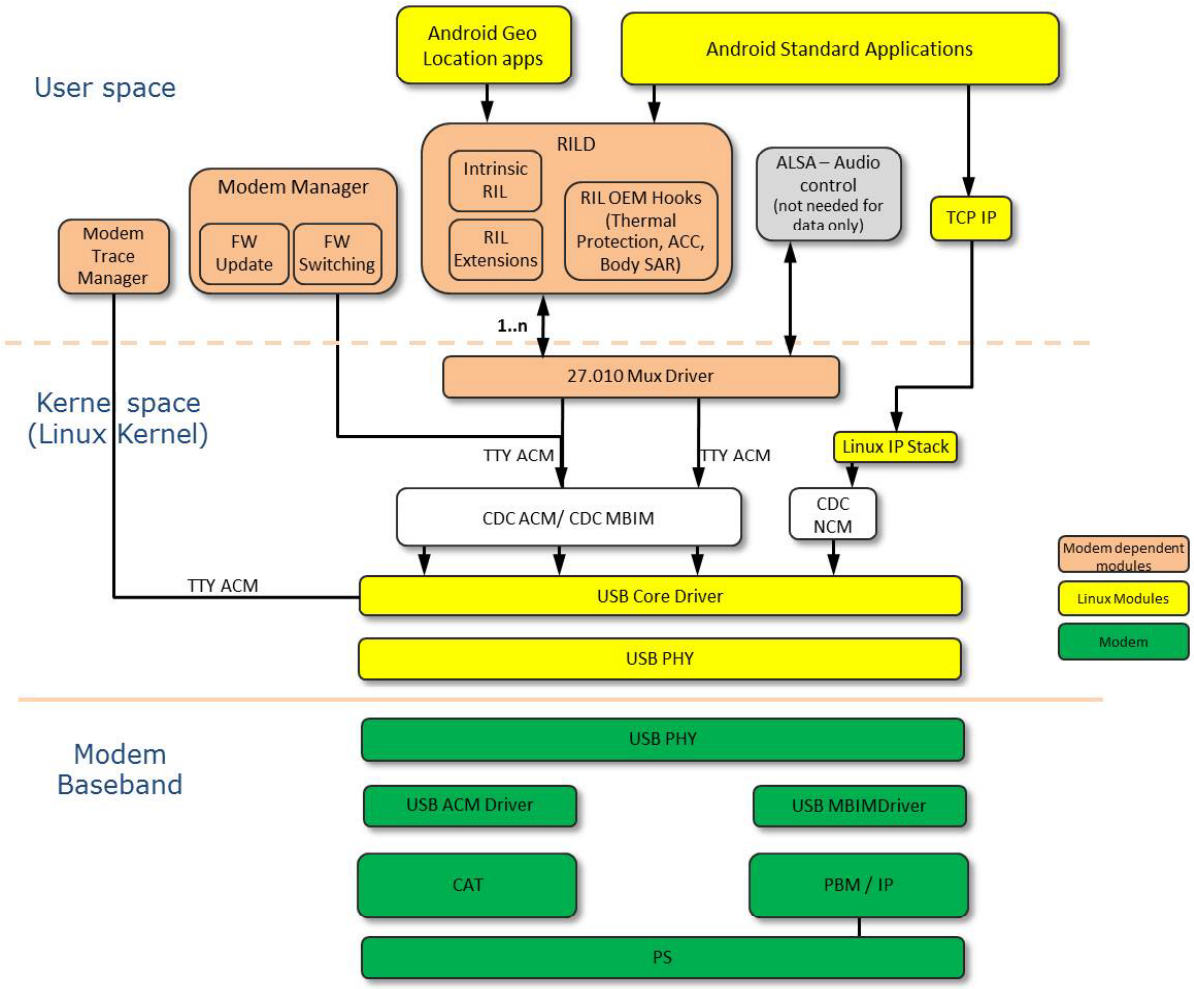

Figure 16 Chrome Software Architecture

Reproduction forbidden without written authorization from Telit Communications S.p.A. - All Rights Reserved.

7 Operating Environment

Table 24 Operating Environment

Item	Description
Form Factor	Card Type 3042
Operating Temperature	The module full operating temperature in compliance with 3GPP specification shall be -10 °C to +55 °C – Normal +55 °C to +70 °C – Extreme Extreme is the surrounding air temperature of the module inside the platform when the card is fully operating at worst case condition. We cannot guarantee the RF performance of the device, since components might operate out of specification. On the RF side we are using a mechanism called Progressive Power Reduction to limit the PA output power at high operating temperature.
Storage Temperature	-40 °C (minus 40) to +70 °C (plus 70) non-operating.
Humidity	<85% humidity, non-condensing

Reproduction forbidden without written authorization from Telit Communications S.p.A. - All Rights Reserved.

8 Power Delivery Requirements

8.1 Electrical Parameters (3.3 V Power Supply)

The M.2 modules utilize a single regulated power rail of 3.3 V provided by the host platform. There is no other VDDIO like pin and the M.2 module is responsible for generating its own I/O voltage source using the 3.3 V power rail. This 3.3 V voltage rail source on the platform should always be on and available during the system's stand-by/suspend state to support the wake event processing on the communications card.

There are 5 power pins on the host interface, pins 2, 4, 70, 72, and 74.

The requirements of the regulated 3.3 V power supply provided by the host platform are listed below.

Table 25 M.2 Module Power Delivery Requirements - Ultrabook

Requirement	Detailed Description
Supply voltage	3.3 V at the Card connector will be within 5% tolerance on the motherboard.
Peak Current	The host board shall provide 2.5 A peak current.
Average Current	Average max current of 1.1 A will be supported.
Max in-rush current	Max module in-rush current of 5.1 A will be supported.
Power pin connections	The power pins specified in WWAN card #'s, 2, 4, 70, 72, 74 will be connected to 3.3 V supply and WWAN configuration pins 1, 69, and 75 will be connected to ground.

For Tablet platforms, the 3.3 V regulated power rail can be replaced with a direct VBAT connection. Key parameters for VBAT in a direct connection configuration are shown in Table 26.

Table 26 VBAT Power Delivery Requirements – Direct Connections (Tablet)

Power Source	Vmin	Vmax	Cell Type
VBAT	3.135 V*	4.4 V	Once cell Li-Ion battery

(*) RF performance cannot be guaranteed below 3.135 V.

Reproduction forbidden without written authorization from Telit Communications S.p.A. - All Rights Reserved.

8.2 Electrical Parameters - Host Interface Signals

Table 27 DC Specification for 3.3V Logic Signaling

Symbol	Parameter	Condition	Min	Max	Unit
+3.3V	Supply Voltage	-	3.135	3.465	V
V_{IH}	Input High Voltage	-	2.0	3.6	V
V_{IL}	Input Low Voltage	-	-0.5	0.8	V
I_{OL}	Output Low Current for Open-drain Signals Not applicable to LED# and DAS/DSS# pins	0.4 V	4	-	mA
I_{OL}	Output Low Current for Open-drain Signals Applies to the LED# pins	0.4 V	9	-	mA
I_{IN}	Input Leakage Current	0 V to 3.3 V	-10	+10	µA
I_{LKG}	Output Leakage Current	0 V to 3.3 V	-50	+50	µA
C_{IN}	Input Pin Capacitance	-	-	7	pF
C_{OUT}	Output Pin Capacitance	-	-	30	pF
$R_{PULL-UP}$	Pull-up Resistance	-	9	60	kΩ

Table 28 DC Specification for 1.8V Logic Signaling

Symbol	Parameter	Condition	Min	Max	Unit
V_{DD18}	Supply Voltage	-	1.7	1.9	V
V_{IH}	Input High Voltage	-	0.7 * V_{DD18}	V_{DD18} + 0.3	V
V_{IL}	Input Low Voltage	-	-0.3	0.3 V_{DD18}	V
V_{OH}	Output High Voltage	I_{OH} = -1 mA V_{DD18} Min	V_{DD18} - 0.45	-	V
V_{OL}	Output Low Voltage	I_{OL} = 1 mA V_{DD18} Min	-	0.45	V
I_{IN}	Input Leakage Current	0 V to V_{DD18}	-10	+10	µA
I_{LKG}	Output Leakage Current	0 V to V_{DD18}	-50	+50	µA
C_{IN}	Input Pin Capacitance	-	-	10	pF

Reproduction forbidden without written authorization from Telit Communications S.p.A. - All Rights Reserved.

8.3 Power Consumption

This section lists the power consumption targets.

Typical target values at Vsys = 3.3 V

Table 29 LTE Power Consumption

M.2 Power Consumption (*)		Transmit Power	
LTE Use Case	**Band**	**10 dBm**	**23 dBm**
LTE UTP, Cat. 3, 20 MHz, 100 RB - (APAC SKU only)	1	1195 mW	2195 mW
LTE UTP, Cat. 3, 20 MHz, 100 RB - (APAC SKU only)	3	1175 mW	2356 mW
LTE UTP, Cat. 3, 10 MHz, 50 RB - (APAC SKU only)	8	1000 mW	2201 mW
LTE UTP, Cat. 3, 20 MHz, 100 RB - (APAC SKU only)	9	1175 mW	2244 mW
LTE UTP, Cat. 3, 10 MHz, 50 RB - (APAC SKU only)	11	1073 mW	2155 mW
LTE UTP, Cat. 3, 15 MHz, 75 RB - (APAC SKU only)	18	1122 mW	1911 mW
LTE UTP, Cat. 3, 15 MHz, 75 RB - (APAC SKU only)	19	1112 mw	1874 mW
LTE UTP, Cat. 3, 15 MHz, 75 RB - (APAC SKU only)	21	1208 mW	2270 mW
LTE UTP, Cat. 3, 100 Mbps/50 Mbps, 20 MHz – (APAC not included)	7	1068 mW	2531 mW
LTE UTP, Cat. 3, max throughput, 10 MHz – (APAC not included)	17	916 mW	2394 mW
LTE Use Case	**Standby Power**		
LTE Stand-by current, DRX 1.28 s serv. Cell only	8 mW		

(*) Applicable to modules:

- LN930
- LN930-AP

Table 30 UMTS Power Consumption

M.2 Power Consumption		Transmit Power
UMTS Use Case (DC-HSDAP+ or HSDPA+)	**Band**	**10 dBm**
UMTS FTP, Cat. 24, RxDiv (M.2 DC-HSDPA+)	Band 1	988 mW

Reproduction forbidden without written authorization from Telit Communications S.p.A. - All Rights Reserved.

UMTS FTP, Cat 14, QAM64 (M.2 DC-HSDPA+)	Band 1	771 mW
UMTS FTP, Cat 14, QAM64 (M.2 HSDPA+)	Band 1	813 mW
Standby Power		
UMTS Stand-by current, DRX7, 16NB cells	-	6 mW
UMTS Stand-by current, DRX7, 16NB cells (HN930)	-	6.6 mW

Table 31 GSM Power Consumption

GSM Use Case	Band	Transmit Power
2UL, 1DL, PCL10 (*)	GPRS 900	475 mW
2UL, 1DL, PCL5 (*)	GPRS900	1482 mW
Standby Power		
GSM Stand-by, DRX5, 16NB cells	-	6 mW
GSM Stand-by, DRX5, 16NB cells (£)	-	6.88 mW

(*) Applicable to modules: LN930, LN930-AP, HN930

(£) Applicable to module: HN930 (XMM™ 6260 based)

Reproduction forbidden without written authorization from Telit Communications S.p.A. - All Rights Reserved.

9 Other Information

9.1 EMI/EMC and Platform Noise

The M.2 Data Card has shielding and noise filtering in place to ensure that the WWAN module does not impact the operation of the host system.

The M.2 Data Card must also be able to tolerate platform noise caused by high order clock harmonics from the host processor and associated support circuitry. It is required that the noise levels (as measured at the antenna connector) in the operating frequencies of the M.2 Data Card be no greater than 5 dB as compared to the noise floor of the host system.

9.2 Platform Noise Mitigation - Adaptive Clocking

Wireless subsystems in mobile platforms are affected by platform related noise, even with the best antenna and chassis design. This noise hampers the wireless radio performance, sometimes severely. For platforms that incorporate wireless subsystems like WWAN, passing the wireless operator certification is an important component of platform launch.

One of the key elements of platform noise, commonly referred to as RF interference, is LCD display panel pixel clock and its harmonics. The pixel clock generates RF that translates directly into noise picked up by platform wireless radios due to the close proximity of display electronics and the integrated antennas in the system. Many of the panel vendors allow the pixel clock to be “tweaked” (i.e. adapt the pixel clock) to shift the harmonics from interfering with the wireless components in operating radio frequencies.

A radio’s receive performance could be improved by moving any harmonics of the graphics pixel clock outside of the frequencies used by the wireless modules. This will be accomplished by shifting the display pixel clock. Shifting the pixel clock is not expected to affect the graphics quality or its performance. The display panel refresh rate will not be changed.

To support crosstalk mitigation, the WWAN module provides an event indication to the host when the channel frequency changes. On the event indication, the host would use the frequency change information (i.e. Center Frequency, Bandwidth, and any other optional information) through an API that would facilitate the facilitating the implementation of a noise mitigation service.

9.3 Thermal Monitoring

Reproduction forbidden without written authorization from Telit Communications S.p.A. - All Rights Reserved.

The M.2 Data Card includes a digital thermal sensor in order to monitor the temperature of the WWAN Card. The firmware will support the extraction of temperature information from the module and the configuration of auxiliary trip points.

The configuration of the thermal trip points and receipt of thermal data is available through a WWAN power control API in order for the host to implement a power and thermal management framework for the system.

9.4 Seamless Roaming / Wifi Offload

The WWAN M.2 module provides support for EAP methods; EAP-SIM, EAP-AKA, and EAP-AKA'. These methods, which are used on WiFi authentication, require access to WWAN SIM credentials to connect to WiFi Networks and offload from WWAN.

All necessary AT commends needed for the EAP-SIM functionality are supported. In addition, all necessary commands need for the PIN entry, change, and lock/unlock are supported.

Through the API, the host can manage Wi-Fi Hotspot connectivity with Operator provisioned Hotspot SSIDs and/or End-User provided SSIDs and seamlessly offload a data session from a 3G/4G connection to Wi-Fi hotspot connection after successful authentication of the device and authorization of the end-user subscription using the SIM on the platform.

9.5 Conducted Transmit Power

Transmit power as measure at the WWAN antenna connector

Table 32 Conducted Transmit Power – 2G

Parameter	Condition	Requirement
Conducted Transmit Power	850 MHz/900 MHz	33 dBm +/- 3 db
	1800 MHz/1900 MHz	30 dBm +/- 3 db

2G not supported for APAC SKU

Table 33 Conducted Transmit Power – 3G

HDPA+ / LTE LN930		
Parameter	**Condition**	**Requirement**
Conducted Transmit Power[1]	W-CDMA class 3	24 dBm + 1 db /- 3 db
LN930-AP (APAC SKU only)		
Parameter	**Condition**	**Requirement**
Conducted Transmit Power[1]	W-CDMA class 3	24 dBm + 1 db /- 3 db

[1] Conducted transmit power as measured at the WWAN M.2 RF main antenna connector.

Reproduction forbidden without written authorization from Telit Communications S.p.A. - All Rights Reserved.

Table 34 Conducted Transmit Power – LTE

HDPA+ / LTE LN930		
Parameter	**Condition**	**Requirement**
Conducted Transmit Power[1]	E-UTRA class 3	23 dBm + 0.5/- 1 db
LN930-AP (APAC SKU only)		
Parameter	**Condition**	**Requirement**
Conducted Transmit Power[1]	E_UTRA class 3	22.5 dBm + 0.5 /- 1 db

[2] Conducted transmit power as measured at the WWAN M.2 RF main antenna connector.

9.6 Receiver Sensitivity

The reference sensitivity power level is the minimum mean power applied to both the WWAN M.2 antenna ports at which the throughput shall meet or exceed the requirements for the specified reference measurement channel.

Condition: Calibration voltage = 3.3V, 25C shielded room

Table 35 Rx Sensitivity - GSM

Band	Condition	Min Rx Sensitivity Limit (dBm)
GSM850	GMSK	-110
GSM900	GMSK	-109
GSM1800	GMSK	-109
GSM1900	GMSK	-106

Reproduction forbidden without written authorization from Telit Communications S.p.A. - All Rights Reserved.

Table 36 Rx Sensitivity - UMTS

HDPA+ / LTE LN930		
Band	**Condition**	**Min Rx Sensitivity Limit (dBm)**
1	BER<0.1%	-107
2	BER<0.1%	-106
4	BER<0.1%	-107
5	BER<0.1%	-107
8	BER<0.1%	-107
LN930-AP (APAC SKU only)		
Band	**Condition**	**Min Rx Sensitivity Limit (dBm)**
1	BER<0.1%	-106
6	BER<0.1%	-106
8	BER<0.1%	-103
11	BER<0.1%	-106
19	BER<0.1%	-106

GSM not supported for LN930-AP

Main and Diversity ports are measured separately. Combining both antenna ports increases sensitivity by 3 dB. Table 36 Rx Sensitivity – UMTS reflects both ports combined.

Table 37 Rx Sensitivity - LTE

HDPA+ / LTE LN930							
					EARFCN		
LTE Band	**Duplex**	**Modulation**	**Bandwidth (Hz)**	**Min Rx Sensitivity Limit (dBm)**	**Low Channel**	**Middle Channel**	**High Channel**
1	FDD	QPSK	10	-96	50	320	550
2	FDD	QPSK	10	-95	650	920	1150
3	FDD	QPSK	10	-97	1250	1678	1900
4	FDD	QPSK	10	-96	2000	2110	2350
5	FDD	QPSK	10	-97	2450	2510	2600
7	FDD	QPSK	10	-96	2800	3100	3400
8	FDD	QPSK	10	-97	3525	3625	3750
13	FDD	QPSK	10	-97	5180	5230	5279
17	FDD	QPSK	10	-97	5780	5800	5890
18	FDD	QPSK	10	-97	5900	5925	5950
19	FDD	QPSK	10	-97	6050	6075	6100
20	FDD	QPSK	10	-94	6200	6300	6400

Reproduction forbidden without written authorization from Telit Communications S.p.A. - All Rights Reserved.

LN930-AP (APAC SKU only)							
					EARFCN		
LTE Band	Duplex	Modulation	Bandwidth (Hz)	Min Rx Sensitivity Limit (dBm)	Low Channel	Middle Channel	High Channel
1	FDD	QPSK	10	-96	50	320	550
3	FDD	QPSK	10	-96	1250	1678	1900
8	FDD	QPSK	10	-96	3525	3625	3750
9	FDD	QPSK	10	-96	3850	3975	4099
11	FDD	QPSK	10	-96	4800	4850	4899
18	FDD	QPSK	10	-97	5900	5925	5950
19	FDD	QPSK	10	-97	6050	6075	6100
21	FDD	QPSK	10	-96	6500	6525	6549
26	FDD	QPSK	10	-97	8740	8865	8989

- GSM not supported for APAC SKU
- Main and Diversity ports are measured separately. Combining both antenna ports increases sensitivity by 3 dB. Table 36. Rx Sensitivity – UMTS reflects both ports combined.
- Table 37 is a generic view that includes all LTE bands for Rx sensitivity. The APAC SKU does not include LTE Bands 2, 4, 5, 7, 13, and 17.

Reproduction forbidden without written authorization from Telit Communications S.p.A. - All Rights Reserved.

9.7 Antenna Recommendations

The following tables provide antenna guidance for the platform designer.

Table 38 Antenna Recommendation

Parameter	Recommendation
Impedance	50 ohm
Antenna Shape and Radiation Pattern	Near Omni-directional in the Horizontal plane is preferred
Polarization	Predominantly vertical polarization and near Omni-Azimuth pattern are desired; H-polarization must not be eliminated (indoor, diversity)
Input Power	33 dBm typical peak power GSM LB* 30 dBm typical peak power GSM HB* 24 dBm typical average power WCDMA 23 dBm typical average power LTE

*Not included for APAC SKU.

Table 39 Antenna Recommendation - Bandwidth of Main & Diversity Antenna

RF Band	Center Frequency	Uplink (UL) UE Tx	Downlink (DL) UE Rx	Duplex Mode	Common Name	Bandwidth of Main Antenna (MHz)	Bandwidth of Diversity Antenna (MHz)
001 I (1)	2100 MHz	1920 MHz to 1980 MHz	2110 MHz to 2170 MHz	FDD	IMT	250	60
002 II (2)	1900 MHz	1850 MHz to 1910 MHz	1930 MHz to 1990 MHz	FDD	PCS	140	60
003 III (3)	1800 MHz	1710 MHz to 1785 MHz	1805 MHz to 1880 MHz	FDD	DCS	170	75
004 IV (4)	1700 MHz	1710 MHz to 1755 MHz	2110 MHz to 2155 MHz	FDD	AWS	445	45
005 V (5)	850 MHz	824 MHz to 849 MHz	869 MHz to 894 MHz	FDD	CLR	70	25
006 VI (6)	850 MHz	830 MHz to 840 MHz	875 MHz to 885 MHz	FDD	UMTS 800	55	10
007 VII (7)	2600 MHz	2500 MHz to 2570 MHz	2620 MHz to 2690 MHz	FDD	IMT-E	190	70
008 VIII (8)	900 MHz	880 MHz to 915 MHz	925 MHz to 960 MHz	FDD	GSM	80	35
009 IX (9)	1800 MHz	1749.9 MHz to 1784.9 MHz	1844.9 MHz to 1879.9 MHz	FDD	UMTS 1800	130	35
010 X (10)	1700 MHz	1710 MHz to 1770 MHz	2110 MHz to 2170 MHz	FDD	Extended AWS	460	60
011 XI (11)	1500 MHz	1427.9 MHz to 1447.9 MHz	1475.9 MHz to 1495.9 MHz	FDD	PDC	68	20
013 XIII (13)	750 MHz	777 MHz to 787 MHz	746 MHz to 756 MHz	FDD	upper SMH block C	41	10
017 XVII (17)	700 MHz	704 MHz to 716 MHz	734 MHz to 746 MHz	FDD	lower SMH blocks B/C (subset of	42	12

Reproduction forbidden without written authorization from Telit Communications S.p.A. - All Rights Reserved.

RF Band	Center Frequency	Uplink (UL) UE Tx	Downlink (DL) UE Rx	Duplex Mode	Common Name	Bandwidth of Main Antenna (MHz)	Bandwidth of Diversity Antenna (MHz)
					band 12)		
018 XVIII (18)	850 MHz	815 MHz to 830 MHz	860 MHz to 875 MHz	FDD	Japan lower 800	60	15
019 XIX (19)	850 MHz	830 MHz to 845 MHz	875 MHz to 890 MHz	FDD	Japan upper 800	60	15
020 XX (20)	800 MHz	832 MHz to 862 MHz	791 MHz to 821 MHz	FDD	EU's Digital Dividend	71	30
021 XXI (21)	1500 MHz	1447.9 MHz to 1462.9 MHz	1495.9 MHz to 1510.9 MHz	FDD	PDC	63	15.4
025 XXV (25)	1900 MHz	1850 MHz to 1915 MHz	1930 MHz to 1995 MHz	FDD	Extended PCS (superset of band 2)	145	65
026 XXVI (26)	850MHz	814 MHz to 849 MHz	859 MHz to 894 MHz	FDD	ESM+CLR	80	35
027 XXVII (27)	850MHz	806 MHz to 824 MHz	851 MHz to 869 MHz	FDD	ESMR	63	18
028 XXVIII (28)	750MHz	703 MHz to 728 MHz	758 MHz to 803 MHz	FDD	APAC 700	100	45
GPS	1575.42 MHz				GPS L1		35
GLONASS	1602 MHz				GLONASS L1		35

- APAC SKU does not include RF Bands 7, 10, 13, 17, 20, 25, 26, 27, 28

9.8 GNSS Sensitivity

Table 40 GNSS Sensitivity

Parameter	Min Limit (dBm)
Cold Start Sensitivity	-145
Hot Start Sensitivity	-155

Reproduction forbidden without written authorization from Telit Communications S.p.A. - All Rights Reserved.

10 3GPP Compliance

M.2 module complies with the following listed test standards:

- 3GPP TS 31.121 USIM
- 3GPP TS 31.124USAT
- 3GPP TS51.010-1, 2G PS & RF & RRM
- 3GPP TS 51.010-4 2G SIMTK
- 3GPP TS34.121-1 3G RF & RRM
- 3GPP TS34.123-1 3G PS
- 3DPP TS36.124 LTE Radiated Emission
- 3GPP TS36.521-1 LTE RF
- 3GPP TS 36.521-3 LTE RRM
- 3GPP TS36.523-1 LTE PS
- ETSI TS 102 230 UICC
- OMA ETS SUPL v1.0 LBS SUPL
- OMA ETS SUPL v2.0 LBS SUPL

Reproduction forbidden without written authorization from Telit Communications S.p.A. - All Rights Reserved.

11 WWAN Card Type 3042-S3-B

11.1 Mechanical Dimensions

The mechanical dimensions of WWAN Card Type 3042 are shown in Figure 17 and Figure 17.

The WWAN card is 30 mm x 42 mm. The height is 1.5 mm from the top of the PCB to the top of the outside shield. There are a total of 75 pins; however 8 pins are lost to support the slot+. All components are mounted on the Top side.

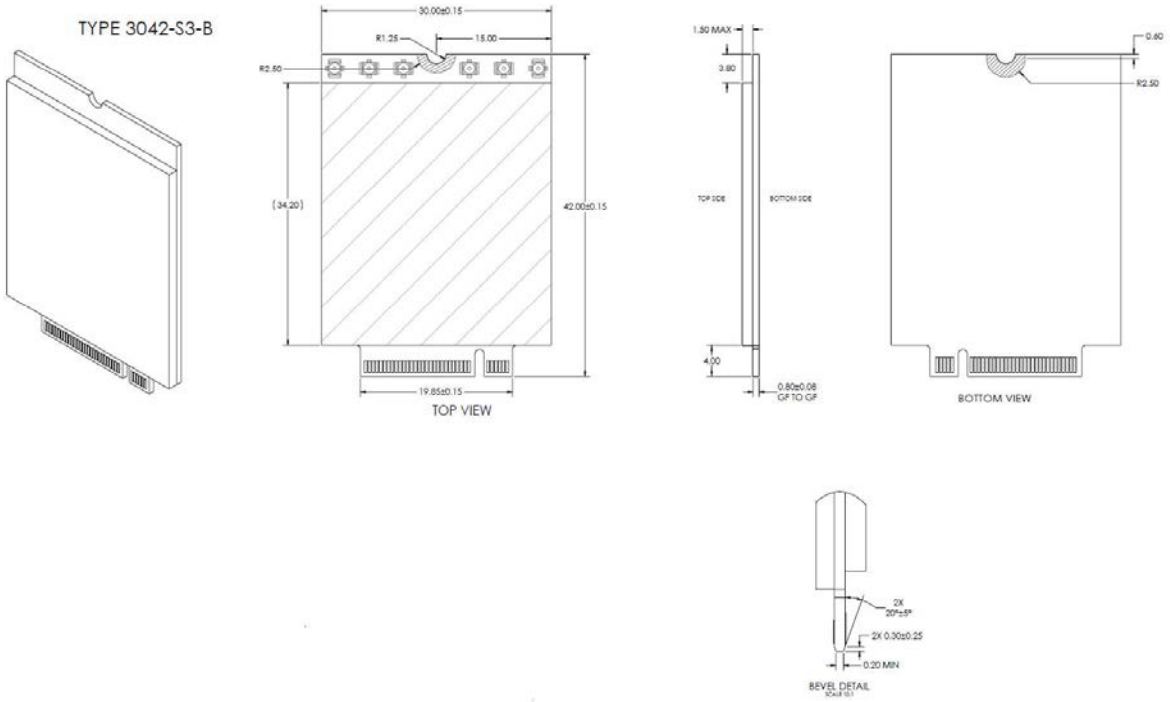

Figure 17 WWAN Card 3042 Mechanical Dimensions

Reproduction forbidden without written authorization from Telit Communications S.p.A. - All Rights Reserved.

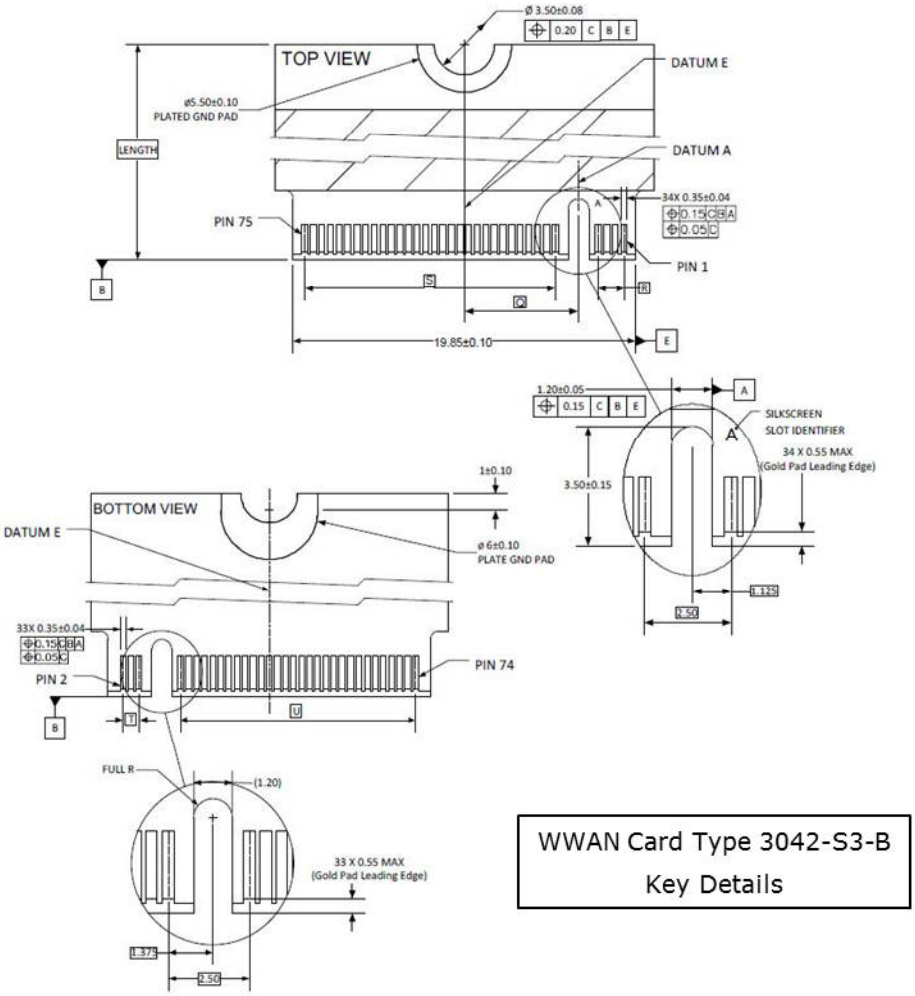

Figure 18 WWAN Card 3042 Slot Key Details

Reproduction forbidden without written authorization from Telit Communications S.p.A. - All Rights Reserved.

11.2 Land Pattern

Figure 19 illustrates a typical land pattern for a top-mount connector with the key removed.

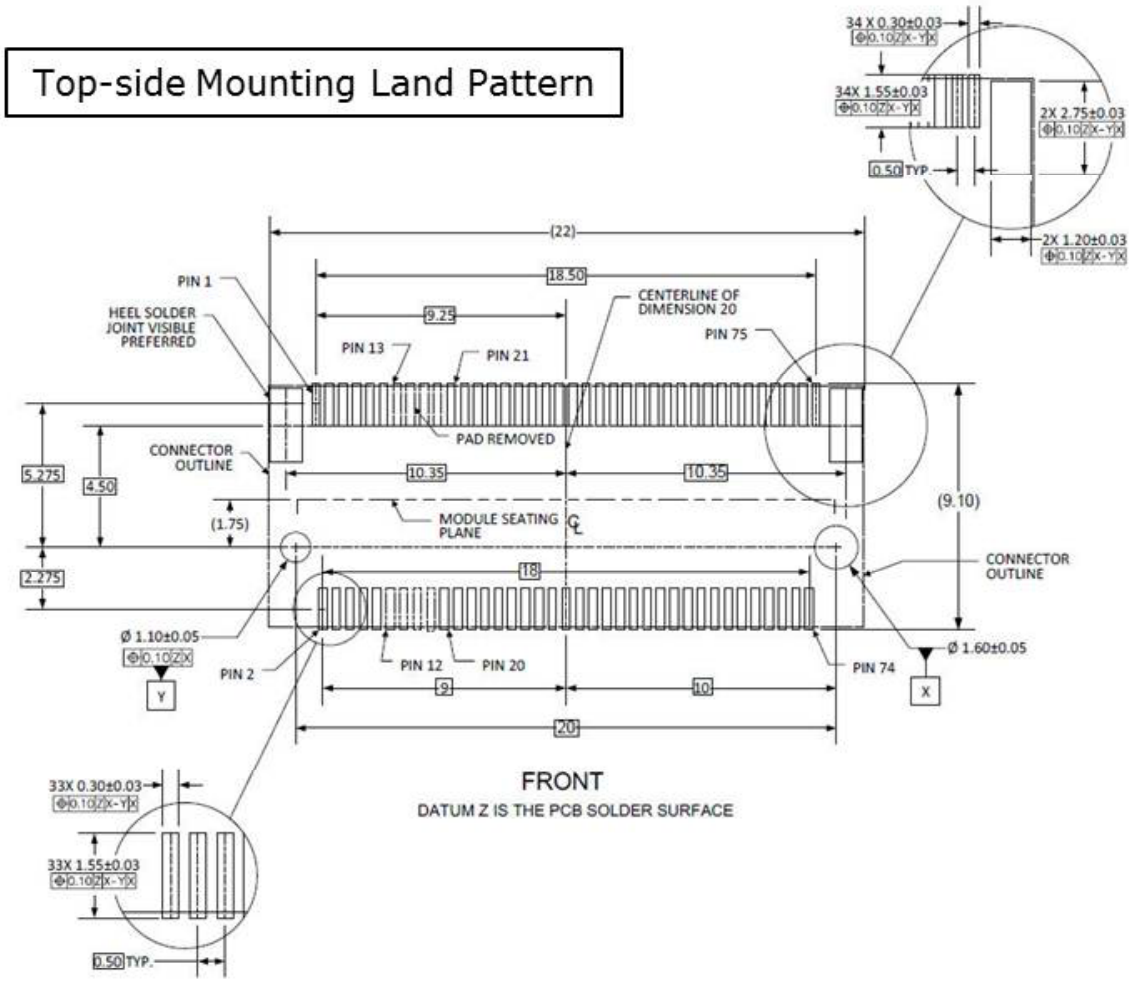

Figure 19 WWAN Card Type 3042 Top-Side Mounting Land Pattern

Reproduction forbidden without written authorization from Telit Communications S.p.A. - All Rights Reserved.

Figure 20 illustrates a typical mid-plane (in-line) land pattern with slot key removed.

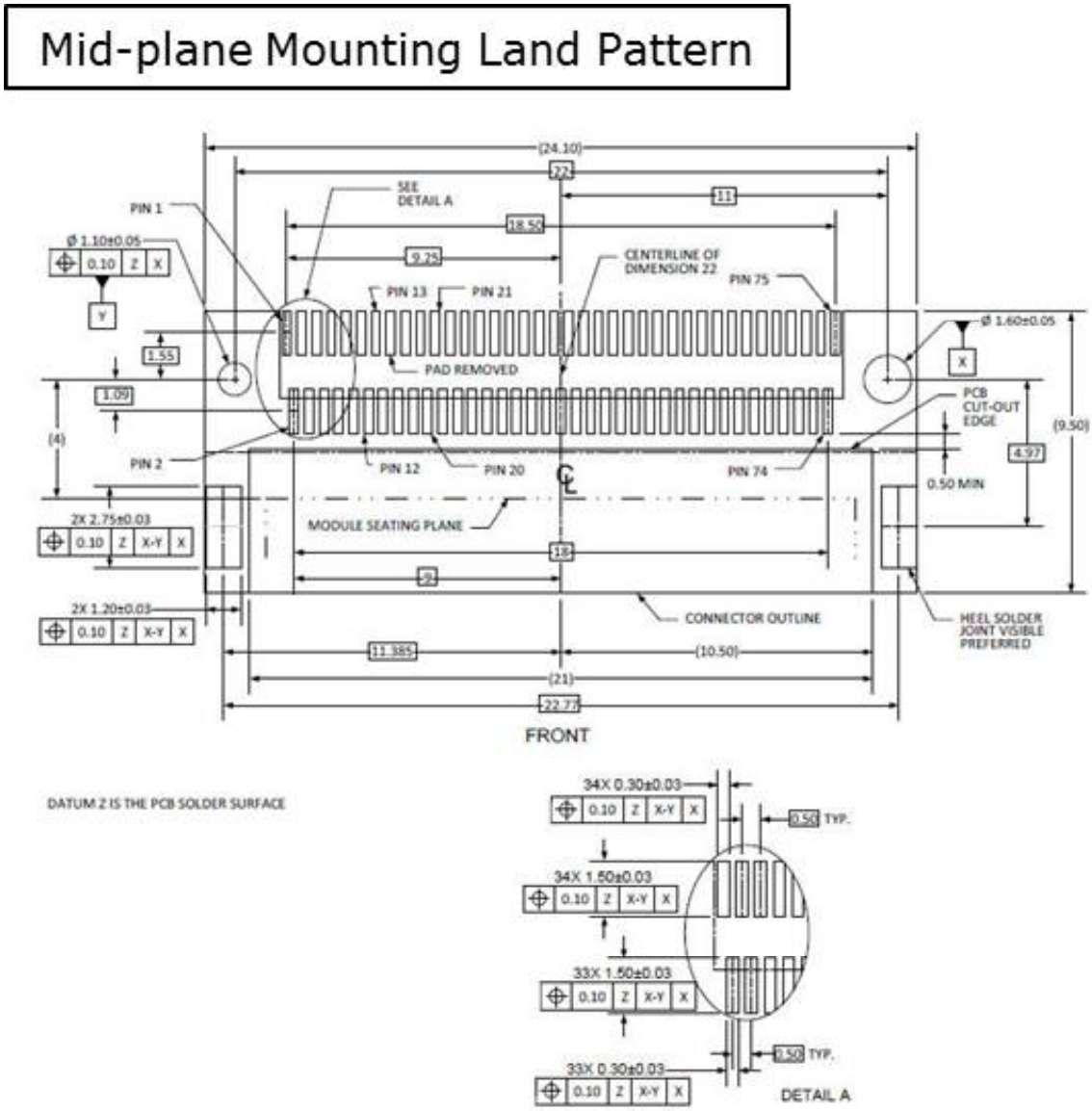

Figure 20 WWAN Card 3042 Mid-plane Land Pattern with Slot Key Removed

Reproduction forbidden without written authorization from Telit Communications S.p.A. - All Rights Reserved.

11.3 Antenna Connector Locations

Figure 21 illustrates the locations for the main Rx/Tx antenna and the Diversity/GPS antenna.

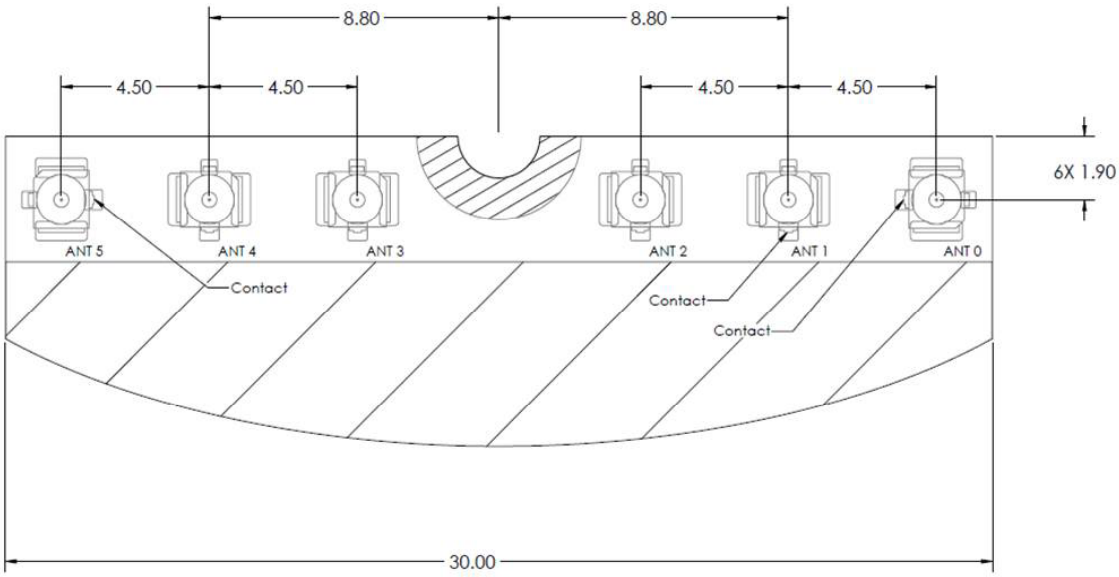

Figure 21 Antenna Connector Location

Table 41 Antenna Connector Assignment

Antenna	Interface
0	TBD
1	Diversity/ GPS
2	TBD
3	TBD
4	WWAN Main Tx/Rx
5	TBD

For M.2 Modules positions 1 and 4 are used. The other antenna connectors are not mounted on the module.

Reproduction forbidden without written authorization from Telit Communications S.p.A. - All Rights Reserved.

12 Safety Recommendations

READ CAREFULLY

Be sure the use of this product is allowed in the country and in the environment required. The use of this product may be dangerous and has to be avoided in the following areas:

- Where it can interfere with other electronic devices in environments such as hospitals, airports, aircrafts, etc.
- Where there is risk of explosion such as gasoline stations, oil refineries, etc. It is responsibility of the user to enforce the country regulation and the specific environment regulation.

Do not disassemble the product; any mark of tampering will compromise the warranty validity. We recommend following the instructions of the hardware user guides for a correct wiring of the product. The product has to be supplied with a stabilized voltage source and the wiring has to be conforming to the security and fire prevention regulations. The product has to be handled with care, avoiding any contact with the pins because electrostatic discharges may damage the product itself. Same cautions have to be taken for the SIM, checking carefully the instruction for its use. Do not insert or remove the SIM when the product is in power saving mode.
The system integrator is responsible of the functioning of the final product; therefore, care has to be taken to the external components of the module, as well as of any project or installation issue, because the risk of disturbing the GSM network or external devices or having impact on the security. Should there be any doubt, please refer to the technical documentation and the regulations in force. Every module has to be equipped with a proper antenna with specific characteristics. The antenna has
to be installed with care in order to avoid any interference with other electronic devices and has to guarantee a minimum distance from the body (20 cm). In case of this requirement cannot be satisfied, the system integrator has to assess the final product against the SAR regulation.

The European Community provides some Directives for the electronic equipments introduced on the market. All the relevant information's are available on the European Community website:

http://ec.europa.eu/enterprise/sectors/rtte/documents/

The text of the Directive 99/05 regarding telecommunication equipments is available, while the applicable Directives (Low Voltage and EMC) are available at:

http://ec.europa.eu/enterprise/sectors/electrical/

Reproduction forbidden without written authorization from Telit Communications S.p.A. - All Rights Reserved.

13 Conformity assessment issues

The following chapters are related to the M.2 module on the EVK carrier board.

13.1 1999/5/EC Directive

The LN930 products portfolio has been evaluated against the essential requirements of the 1999/5/EC Directive.

Bulgarian	С настоящето Telit Communications S.p.A. декларира, че 2G/3G module отговаря на съществените изисквания и другите приложими изисквания на Директива 1999/5/ЕС.
Czech	Telit Communications S.p.A. tímto prohlašuje, že tento 2G/3G module je ve shodě se základními požadavky a dalšími příslušnými ustanoveními směrnice 1999/5/ES.
Danish	Undertegnede Telit Communications S.p.A. erklærer herved, at følgende udstyr 2G/3G module overholder de væsentlige krav og øvrige relevante krav i direktiv 1999/5/EF.
Dutch	Hierbij verklaart Telit Communications S.p.A. dat het toestel 2G/3G module in overeenstemming is met de essentiële eisen en de andere relevante bepalingen van richtlijn 1999/5/EG.
English	Hereby, Telit Communications S.p.A., declares that this 2G/3G module is in compliance with the essential requirements and other relevant provisions of Directive 1999/5/EC.
Estonian	Käesolevaga kinnitab Telit Communications S.p.A. seadme 2G/3G module vastavust direktiivi 1999/5/EÜ põhinõuetele ja nimetatud direktiivist tulenevatele teistele asjakohastele sätetele.
German	Hiermit erklärt Telit Communications S.p.A., dass sich das Gerät 2G/3G module in Übereinstimmung mit den grundlegenden Anforderungen und den übrigen einschlägigen Bestimmungen der Richtlinie 1999/5/EG befindet.
Greek	ΜΕ ΤΗΝ ΠΑΡΟΥΣΑ Telit Communications S.p.A. ΔΗΛΩΝΕΙ ΟΤΙ 2G/3G module ΣΥΜΜΟΡΦΩΝΕΤΑΙ ΠΡΟΣ ΤΙΣ ΟΥΣΙΩΔΕΙΣ ΑΠΑΙΤΗΣΕΙΣ ΚΑΙ ΤΙΣ ΛΟΙΠΕΣ ΣΧΕΤΙΚΕΣ ΔΙΑΤΑΞΕΙΣ ΤΗΣ ΟΔΗΓΙΑΣ 1999/5/ΕΚ.
Hungarian	Alulírott, Telit Communications S.p.A. nyilatkozom, hogy a 2G/3G module megfelel a vonatkozó alapvetõ követelményeknek és az 1999/5/EC irányelv egyéb elõírásainak.
Finnish	Telit Communications S.p.A. vakuuttaa täten että 2G/3G module tyyppinen laite on direktiivin 1999/5/EY oleellisten vaatimusten ja sitä koskevien direktiivin muiden ehtojen mukainen.
French	Par la présente Telit Communications S.p.A. déclare que l'appareil 2G/3G module est conforme aux exigences essentielles et aux autres dispositions pertinentes de la directive 1999/5/CE.
Icelandic	Hér með lýsir Telit Communications S.p.A. yfir því að 2G/3G module er í samræmi við grunnkröfur og aðrar kröfur, sem gerðar eru í tilskipun 1999/5/EC
Italian	Con la presente Telit Communications S.p.A. dichiara che questo 2G/3G module è conforme ai requisiti essenziali ed alle altre disposizioni pertinenti stabilite dalla direttiva 1999/5/CE.
Latvian	Ar šo Telit Communications S.p.A. deklarē, ka 2G/3G module atbilst Direktīvas 1999/5/EK būtiskajām prasībām un citiem ar to saistītajiem noteikumiem.
Lithuanian	Šiuo Telit Communications S.p.A. deklaruoja, kad šis 2G/3G module atitinka esminius reikalavimus ir kitas 1999/5/EB Direktyvos nuostatas.
Maltese	Hawnhekk, Telit Communications S.p.A., jiddikjara li dan 2G/3G module jikkonforma mal-ħtiġijiet essenzjali u ma provvedimenti oħrajn relevanti li hemm fid-Dirrettiva 1999/5/EC.

Reproduction forbidden without written authorization from Telit Communications S.p.A. - All Rights Reserved.

Norwegian	Telit Communications S.p.A. erklærer herved at utstyret 2G/3G module er i samsvar med de grunnleggende krav og øvrige relevante krav i direktiv 1999/5/EF.
Polish	Niniejszym Telit Communications S.p.A. oświadcza, że 2G/3G module jest zgodny z zasadniczymi wymogami oraz pozostałymi stosownymi postanowieniami Dyrektywy 1999/5/EC
Portuguese	Telit Communications S.p.A. declara que este 2G/3G module está conforme com os requisitos essenciais e outras disposições da Directiva 1999/5/CE.
Slovak	Telit Communications S.p.A. týmto vyhlasuje, že 2G/3G module spĺňa základné požiadavky a všetky príslušné ustanovenia Smernice 1999/5/ES.
Slovenian	Telit Communications S.p.A. izjavlja, da je ta 2G/3G modul v skladu z bistvenimi zahtevami in ostalimi relevantnimi določili direktive 1999/5/ES.
Spanish	Por medio de la presente Telit Communications S.p.A. declara que el 2G/3G module cumple con los requisitos esenciales y cualesquiera otras disposiciones aplicables o exigibles de la Directiva 1999/5/CE.
Swedish	Härmed intygar Telit Communications S.p.A. att denna 2G/3G module står I överensstämmelse med de väsentliga egenskapskrav och övriga relevanta bestämmelser som framgår av direktiv 1999/5/EG.

In order to satisfy the essential requirements of 1999/5/EC Directive, the LN930 is compliant with the following standards:

RF spectrum use (R&TTE art. 3.2)	EN 300 440-2 V1.4.1 EN 301 511 V9.0.2 EN 301 908-1 V6.2.1 EN 301 908-2 V5.2.1 EN 301 908-13 V5.2.1 EN 300 440-1 V1.6.1
EMC (R&TTE art. 3.1b)	EN 301 489-1 V1.9.2 EN 301 489-3 V1.4.1 EN 301 489-7 V1.3.1 EN 301 489-24 V1.5.1
Health & Safety (R&TTE art. 3.1a)	EN 60950-1:2006 + A11:2009 + A1:2010 + A12:2011 EN 62311: 2008

Reproduction forbidden without written authorization from Telit Communications S.p.A. - All Rights Reserved.

The conformity assessment procedure referred to in Article 10 and detailed in Annex IV of Directive 1999/5/EC has been followed with the involvement of the following Notified Body:

Thus, the following marking is included in the product:

CE 0682

The full declaration of conformity can be found on the following address:
http://www.telit.com/

There is no restriction for the commercialization in all the countries of the European Union.

Final product integrating this module must be assessed against essential requirements of the 1999/5/EC (R&TTE) Directive. It should be noted that assessment does not necessarily lead to testing. Telit Communications S.p.A. recommends carrying out the following assessments:

RF spectrum use (R&TTE art. 3.2)	It will depend on the antenna used on the final product.
EMC (R&TTE art. 3.1b)	Testing
Health & Safety (R&TTE art. 3.1a)	Testing

Alternately, assessment of the final product against EMC (Art. 3.1b) and Electrical safety (Art. 3.1a) essential requirements can be done against the essential requirements of the EMC and the LVD Directives:

- Low Voltage Directive 2006/95/EC and product safety
- Directive EMC 2004/108/EC for conformity for EMC

13.2 CE RF Exposure Compliance

This device meets the EU requirements (1999/519/EC) and the International Commission on Non-Ionizing Radiation Protection (ICNIRP) on the limitation of exposure of the general public to electromagnetic fields by way of health protection.
To comply with the RF exposure requirements, this module must be installed in a host platform that is intended to be operated in a minimum of 20 cm separation distance to the user.

Reproduction forbidden without written authorization from Telit Communications S.p.A. - All Rights Reserved.

13.3 R&TTE Regulation:

In all cases assessment of the final product must be met against the Essential requirements of the R&TTE Directive Articles 3.1(a) and (b), safety and EMC respectively, as well as any relevant Article 3.3 requirements.

1. The Dipole antenna (gain: GPRS/EGPRS/WCDMA/LTE: 2dBi) was verified in the conformity testing, and for compliance the antenna shall not be modified. A separate approval is required for all other operating configurations, including different antenna configurations.
2. If any other simultaneous transmission radio is installed in the host platform together with this module, or above restrictions cannot be kept, a separate RF exposure assessment and CE equipment certification is required.

Reproduction forbidden without written authorization from Telit Communications S.p.A. - All Rights Reserved.

14 FCC/IC Regulatory notices

14.1 Modification statement

Telit has not approved any changes or modifications to this device by the user. Any changes or modifications could void the user's authority to operate the equipment.

Telit n'approuve aucune modification apportée à l'appareil par l'utilisateur, quelle qu'en soit la nature. Tout changement ou modification peuvent annuler le droit d'utilisation de l'appareil par l'utilisateur.

14.2 Manual Information to the End User

The OEM integrator has to be aware not to provide information to the end user regarding how to install or remove this RF module in the user's manual of the end product which integrates this module. The end user manual shall include all required regulatory information/warning as show in this manual.

CAN ICES-3(B)/ NMB-3(B)

14.3 Interference statement

This device complies with Part 15 of the FCC Rules and Industry Canada licence-exempt RSS standard(s). Operation is subject to the following two conditions: (1) this device may not cause interference, and (2) this device must accept any interference, including interference that may cause undesired operation of the device.

Le présent appareil est conforme aux CNR d'Industrie Canada applicables aux appareils radio exempts de licence. L'exploitation est autorisée aux deux conditions suivantes : (1) l'appareil ne doit pas produire de brouillage, et (2) l'utilisateur de l'appareil doit accepter tout brouillage radioélectrique subi, même si le brouillage est susceptible d'en compromettre le fonctionnement.

14.4 FCC Class B digital device notice

This equipment has been tested and found to comply with the limits for a Class B digital device, pursuant to part 15 of the FCC Rules. These limits are designed to provide reasonable protection against harmful interference in a residential installation. This equipment generates, uses and can radiate radio frequency energy and, if not installed

Reproduction forbidden without written authorization from Telit Communications S.p.A. - All Rights Reserved.

and used in accordance with the instructions, may cause harmful interference to radio communications. However, there is no guarantee that interference will not occur in a particular installation. If this equipment does cause harmful interference to radio or television reception, which can be determined by turning the equipment off and on, the user is encouraged to try to correct the interference by one or more of the following measures:

- Reorient or relocate the receiving antenna.
- Increase the separation between the equipment and receiver.
- Connect the equipment into an outlet on a circuit different from that to which the receiver is connected.
- Consult the dealer or an experienced radio/TV technician for help.

14.5 Radiation Exposure Statement

This equipment complies with FCC/IC radiation exposure limits set forth for an uncontrolled environment. This equipment should be installed and operated with minimum distance 20 cm between the radiator & your body.

14.6 End Product Labeling

When the module is installed in the host device, the FCC/IC ID label must be visible through a window on the final device or it must be visible when an access panel, door or cover is easily re-moved. If not, a second label must be placed on the outside of the final device that contains the following text: "Contains FCC ID:WL6-ED2LN30PA1", "Contains IC ID: WL6-ED2LN30PA1" The grantee's FCC/IC ID can be used only when all FCC/IC compliance requirements are met.

This device is intended only for OEM integrators under the following conditions:
(1) The antenna must be installed such that 20 cm is maintained between the antenna and users,
(2) The transmitter module may not be co-located with any other transmitter or antenna.
(3) To comply with FCC/IC regulations limiting both maximum RF output power and human exposure to RF radiation, the maximum antenna gain including cable loss in a mobile exposure condition must not exceed:

- 5.0 dBi in Cellular band
- 3.0 dBi in PCS band
- 5.5 dBi in AWS band
- 5.0 dBi in 700 MHz band
- 5.0 dBi in 2500MHz band

In the event that these conditions cannot be met (for example certain laptop configurations or co-location with another transmitter), then the FCC/IC authorization is no longer considered valid and the FCC/IC ID cannot be used on the final product. In these circumstances, the OEM integrator will be responsible for re-evaluating the end product (including the transmitter) and obtaining a separate FCC/IC authorization.

Reproduction forbidden without written authorization from Telit Communications S.p.A. - All Rights Reserved.

15 Document History

Revision	Date	Changes
0	2013-05-20	First issue
1	2013-07-09	• Update setting for Pin 21 on the host interface. This signal is not connected. • Updated pin names of pins 1, 21, 69, and 75 in Table 4 and Table 19 to simply reflect HW Configuration use. • Updated Table 24 to indicate configuration pins 1, 69, and 75 are tied to GND. • Rename section 3.6 Coexistence Interface to In-Device Coexistence Interface. Additional information on the Inter-device coexistence support was added. • Updated section 4.1.3 System Trace Tool Section. • Updated Figure 5 – RF Engine for WW SKU. • Add further information USB LPM to USB section • Added information on Seamless Roaming & Wifi Off-load – SIM_EAP, SIM-AKA under Other Requirements • Added information on Antenna Design Guidelines under Other Requirements.
2	2013-07-29	RF bands updated
3	2013-08-26	Updating on RF bands Updated section 3.5 and 3.4.5 Updated temp range
4	2013-09-09	HN930-DC product was removed from portfolio
5	2013-09-15	Main & Diversity antenna positions have been swapped. • Updated documentation accordingly, Figure 6 and Figure 10. • Updated WWAN M.2 Mechanical drawings, Figure 14 through Figure 17. • Updated Card_power_ON_OFF description for UltraBook in Table 9. • Updated comments in Table 15 regarding the DPR#/SAR signal. • Updated SIM DTECTED signal to indicate an external pull-up. • Updated Platform Block Diagrams to show DPR# signal is connected to an EINT pin (not GPIO) on XGOLD. • Identified Audio Signals on host interface in Table 4. Previously these were simply defined as Reserved. • Updated VBAT requirements in Table 24 and Table 25.
6	2013-11-20	• Regulation section was updated • Adding support for UMTS Band 6 to M.2 APAC SKU (see Table 2). • Updated 3G RF Band support for APAC Module, supported bands are 1, 8, 11, and 19. (see Table 2) • Added Measured Values for 2G/3G Rx Sensitivity Table 31 and Table 32. • Update Measured Value and changed header name in Rx Sensitivity LTE Table 33 • Modified supply voltage lower spec for Ultra book in Table 24. • Update Table 4, Table 6, Table 26 voltage levels for USB and SIM pins. • Added LTE conditions and added Table 33.

7	2014-04-10	• Added SSIC to ICP interface. Updated RESET signal definition. Updated Antenna figures.
		• Updated Conducted Transmit Power requirements, Table 32.
		• Section 2.2, Table 4
		  • Changed UIM signals pins 30, 32, 34, 36
		  • Replaced dash with underscore in signal names.
		  • Changed supply voltage for Antenna Tuning Signal (ANTCTL*) from (1.7 V – 2.6 V) to 1.8 V.
		• Section 3.5, Table 20 changed supply voltage for Antenna Tuning Signals (ANTCTL*) from (1.7 V – 2.6 V) to 1.8 V.
		• Section 3.11, Table 25 correction to both no connect pins and key slot pins.
		• Section 8.2, Table 27
		  o Changed the max voltage to 3.0 V for WAKE_WWAN# signal
		  o Changed Typ voltage and max voltage for the Antenna Tuning Signals to 0/1.8 V and 2.3 V respectfully

Reproduction forbidden without written authorization from Telit Communications S.p.A. - All Rights Reserved.

		• Correction in Section 11.3, fixed typo in sentence: For WWAN M.2 Modules, only positions 1 and 4 are used. • Updated table to only indicate minimum RX sensitivity limit. • Updated Section Conducted Transmit Power section. • Added CAT 4: DL 150 Mbps, UL 50 Mbps to APAC LTE in Table 3 • Deleted LED Blink Status in Table 14 • Updated Table 4 and Table 27 • Added Humidity Requirement • Removed Quality & Reliability section since this is a requirement of the ODM. • Correction to: DPR signal includes pull-up, SSIC N/P pin locations, COEX pin names.

8	2014-06-24	• Added IC Canada certification wording.
		• Section 3.2.1, SIM Design Recommendations - added new section
		• Section 3.12, Antenna Interface changed connector of the WWAN antenna cable to iPEX MHF4 from Hirose W.FLT
		• Section 7, Table 24. Operating Environment changed description for Operating Temperature to include extreme temperature +55 °C to +70 °C and added additional description
		• Section 8.2, deleted Table 27. Electrical Parameters – Host Interface Signals and replaced it with:
		  o Table 27. DC Specification for 3.3 V Logic Signaling
		  o Table 28. DC Specification for 1.8 V Logic Signaling
		• Section 8.3, Table 29. LTE Power Consumption
		  o Added additional LTE Use Cases for APAC SKU only - Bands 1, 3, 8, 9, 11, 18, 19, and 21
		  o Changed standby power to 8 mW
		• Section 9.6, -
		  o Table 35. Rx Sensitivity – GSM - added note indicating that GSM is not supported for APAC SKU.
		  o Table 36. Rx Sensitivity – UMTS– added note indicating that the minimum limits reflects that the main and diversity ports are combined.
		  o Table 37. Rx Sensitivity – LTE – added note indicating that the 8 LTE bands 2, 4, 5, 7, 13, 17, 20, and 26 is not supported for APAC SKU
		• Section 9.7, Antenna Recommendations
		  • Table 38. Antenna Recommendation, added note indicating that the first 2 recommendations for Input Power are not supported for APAC SKU.
		  • Table 39. Antenna Recommendation - Bandwidth of Main & Diversity Antenna - added not indicating that the following 9 RF Bands 007, 010, 013, 017, 020, 025, 026, 027, and 028 are not supported by the APAC SKU.

9	2014-11-18	• Replaced Requirement with Target in Table 32 to Table 37. • Changes to Table 32. Conducted Transmit Power – 2G • Changes to Table 33. Conducted Transmit Power – 3G • Changes to Table 34. Conducted Transmit Power – LTE • Changes to Table 35. Rx Sensitivity – GSM • Changes to Table 36. Rx Sensitivity – UMTS • Changes to Table 37. Rx Sensitivity – LTE • Changes to Table 38. Antenna Recommendation
10	2014-12-21	• Added note to Table 3. WWAN M.2 Module – Data Services • – The change is to describe we can support DL 150 Mbps in WW LTE SKU. This is only for generic SW and VZW SW, but not for AT&T SW. • Changes to Section 3.2 USIM Interface • – Bullet number 2 and 3 • Changes to Section 3.2 USIM Interface List number 2 and 3 • Changes to Table 4. WWAN M.2 Host Interface Signals pins 29, 31, 35, and 37. • Changes to Table 6. USB SSIC - ICP Interface • Changes to Table 33. Conducted Transmit Power – LTE • Changes to Table 4. WWAN M.2 Host Interface Signals pins 29, 31, 35, 37, and 67. • Changes to Table 36. Rx Sensitivity – LTE

Reproduction forbidden without written authorization from Telit Communications S.p.A. - All Rights Reserved.

		• Added new table, Table 39. GNSS Sensitivity

Reproduction forbidden without written authorization from Telit Communications S.p.A. - All Rights Reserved.