Product Number: WL-4GE242
Product Name: LTE Antenna

Index:

1. Mechanical and Packing Drawing / Page 2

2. Revision History / Page 3

3. Specification / Page 4

4. Characteristics and Reliability Test / Page 5

5. Antenna - S Parameter Test Data / Page 6

6. Antenna - Radiation Pattern Test Data / Page 7-8

REV	DATE	DESCRIPTION
X1		

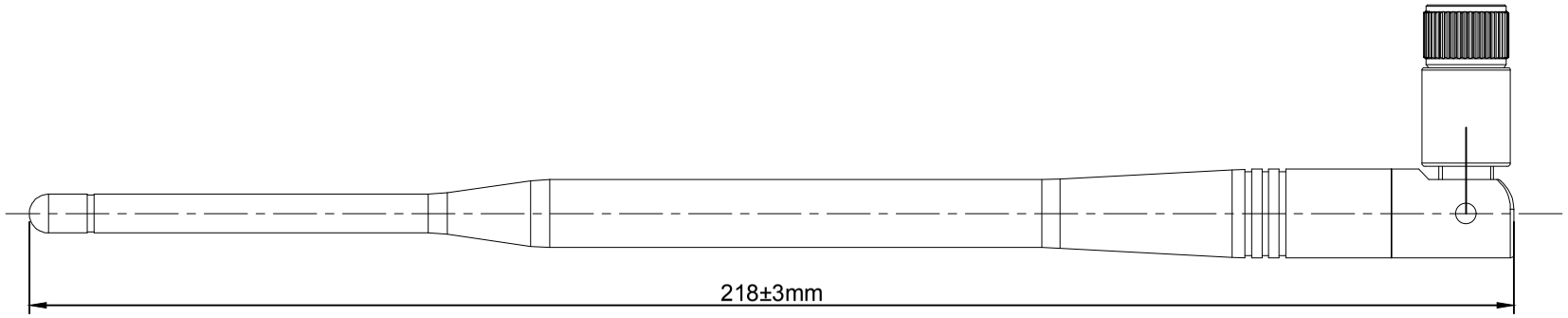

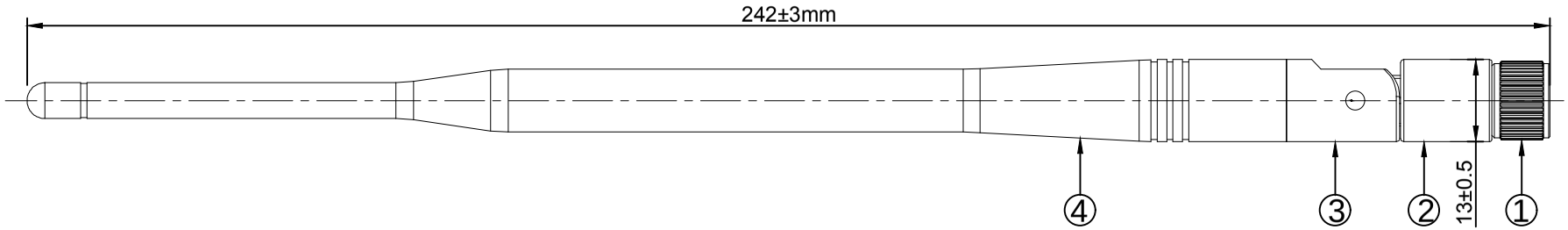

Specification:

Frequency Range: 700-960/1710-2700MHz

Impedance: 50Ω

VSWR: 2.0 max

Gain: 3 dBi

NO	DESCRIPTION		Q'TY	REMARK
4	Antenna Body	PTEE ;Black	1	
3	Connecting cylinder	PC+PBT ;Black	1	
2	Antenna Base	PC+PBT ;Black	1	
1	CONN	SMA Male	1	

CUSTOMER'S SINGATURE

XX.	± 3.0	APPROVED
X.	± 2.0	
.X	± 1.0	CHECKED
.XX	± 0.5	
.XXX	± 0.1	DRAWING CaoChen

CUSTOMER:

PART NO. :

PARTNAME: Antenna Assembly

WAVELINK P/NO. : WL-4GE242

REV	UNIT	FILE :
X1	m/m	SHEET : 1/1

昆山市海宣电子有限公司

Kunshan Wavelink Electronic Co.,Ltd.

2. Revision History

Revision	Date	Change Notification	Description
1.0	2017.11.7		

3. Specification

A. Electrical Characteristics	
Frequency	**700 ~ 960 MHz** **1710 ~ 2700 MHz**
S.W.R.	**<= 5.0 @ 700 ~ 960 MHz** **<= 4.0 @ 1710 ~ 2700 MHz**
Antenna Gain	**1.5 ± 0.5dBi @ 700 ~ 960 MHz** **3.0 ± 0.7dBi @ 1710 ~ 2700 MHz**
Efficiency (%)	**40 % @ 700 ~ 960 MHz** **76% @ 1710 ~ 2700 MHz**
Polarization	**Linear**
Impedance	**50 Ohm**
B. Material & Mechanical Characteristics	
Material of Radiator	**CU**
Material of Plastic	**ABS**
Cable Type	**RG-178U-03**
Connecter Type	**SMA Male**
C. Environmental	
Operation Temperature	**- 40 ˚C ~ + 85 ˚C**
Storage Temperature	**- 40 ˚C ~ + 85 ˚C**
Antenna Color Storage life	**< 2 year**

4. Characteristics and Reliability Test

Test Items		Test Condition and Procedure	Requirements
C1	S.W.R.	Set DUT on Network Analyzer; make individual calibration to test	Directive DUT specification
C2	Antenna Gain	Set DUT on Antenna Chamber; make individual calibration to test	Directive DUT specification
M1	Vibration	GB / T2423 . 48-1997 Amplitude: 0.03 inch (1.5mm); Freq: 20 to 80 to 20 Hz 3 directions; 2 hours for each direction	1. No Visual Damage 2. Frequency Tol.<= 5%
M2	Random Drop	GB / T2423.8-1995 Height: 1.0 Meter; 3 directions; 1 time for each direction	1. No parts separated 2. Frequency Tol.<= 5%
M3	Solderability	GB 2423 . 28- 82 Solder iron: 260±5°C; Duration: 5 seconds	1. Mounted on PCB 2. No Visual Damage
M4	Terminal-Pull Test	Holding with individual specification; force applied to axis of terminal	1. Directive DUT specification 2. Frequency Tol.<= 5%
M5	Terminal-Torque Test	Holding with individual specification; applied clockwise and counterclockwise to the axis of terminal	1. Directive DUT specification 2. Frequency Tol.<= 5%
M6	Dimension	Inspection of dimension, color, material, package, surface process	Directive DUT specification
E1	Salt Spray	GB / T 2423 . 17- 93 Temp: 35°C; RH: >= 95%; NaCl solution: >= 5%; Time: 24 hours	After 2 Hours Recovery 1. No Visual Damage 2. Frequency Tol.<= 5%
E2	Humidity	GB / T 2423 . 4 - 93 Temp: 80°C / 12 H; -40°C / 12H RH: >= 90%; Time: 24 hours	After 2 Hours Recovery 1. No Visual Damage 2. Frequency Tol.<= 5%
E3	Thermal Shock	GB / T 2423 . 22 - 87 1 Cycle: - 40°C (30 minutes) to + 80°C (30 minutes) Cycles: 24	After 2 Hours Recovery 1. No Visual Damage 2. Frequency Tol.<= 5%
E4	Life (High Temp.)	GB /T 2423 . 2 - 89 Temp: 80°C; Time: 24 hours	After 2 Hours Recovery 1. No Visual Damage 2. Frequency Tol.<= 5%
R1	RoHS	With Reference to IEC 62321:2008 with flow chart	Directive RoHS 2011/65/EU
R2	PFOS	With Reference to USA EPA 3540C:1996 by LC/MS	Directive RoHS 2006/122/EC
R3	PFOA	With Reference to USA EPA 3540C:1996 by LC/MS	Directive RoHS 2006/122/EC

5. Antenna - S Parameter Test Data

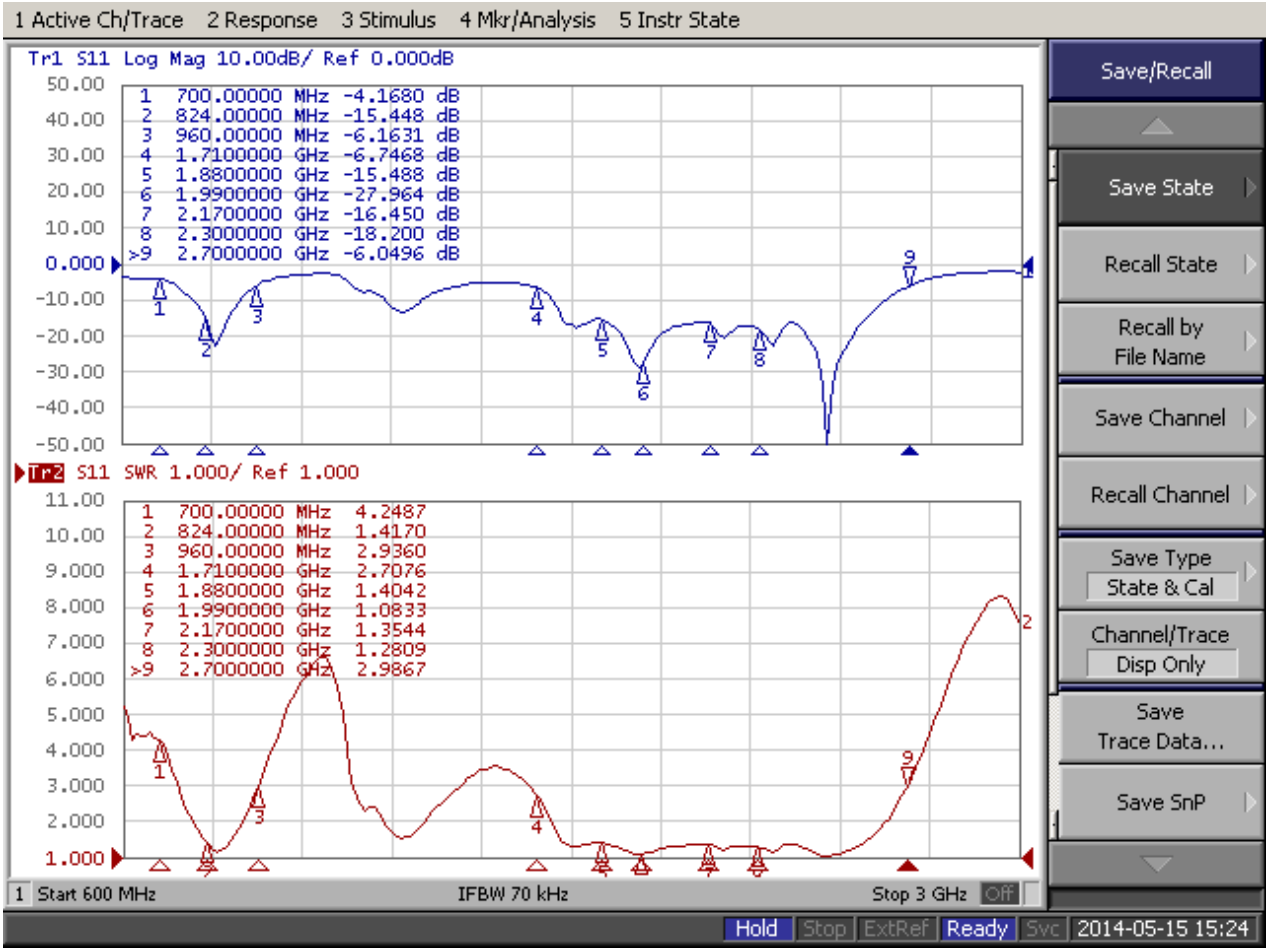

6. Antenna - Radiation Pattern Test Data

704 MHZ	824 MHZ	960 MHZ
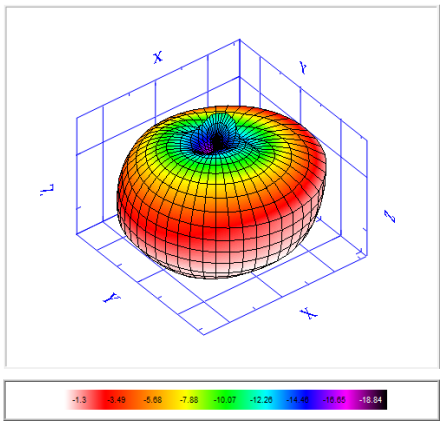	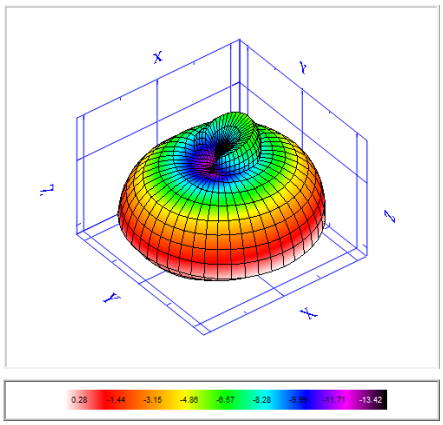	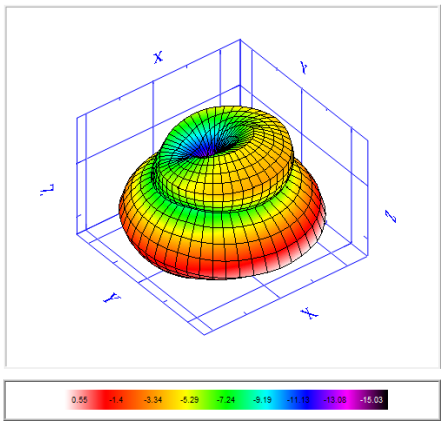

Frequency	704	824	880	960
TRP (dBm)	-4.86	-3.74	-3.45	-3.65
Peak EIRP (dBm)	-1.3	0.28	0.71	0.55
NHPRP +/- 45 (degree)	-4.57	-3.5	-3.23	-3.41
NHPRP +/- 30 (degree)	-5.58	-4.79	-4.53	-4.97
E-Theta Peak Gain (dBi)	-7.42	-6.32	-5.78	-5.7
E-Phi Peak Gain (dBi)	-1.73	0.01	0.51	0.34
E-Total Peak Gain (dBi)	-1.3	0.28	0.71	0.55
Directivity (dBi)	3.56	4.02	4.16	4.2
Efficiency (%)	32.69	42.28	45.19	43.14

1710 MHZ	2200 MHZ	2700 MHZ
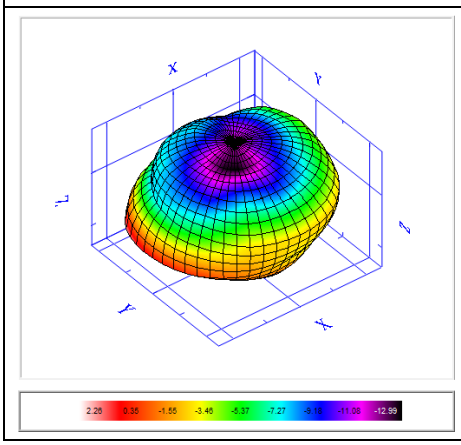	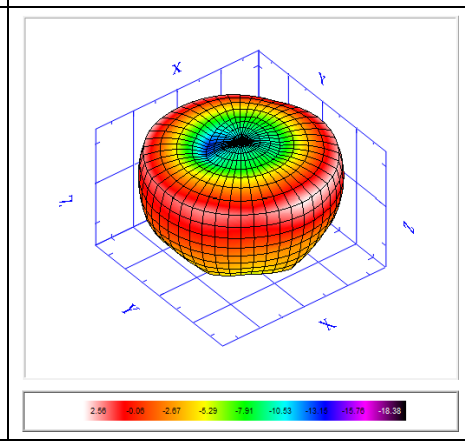	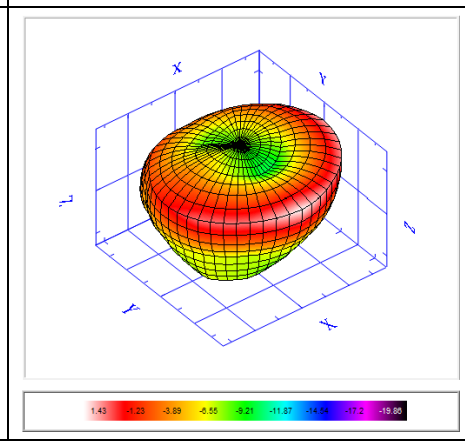

Frequency	1710	1880	1990	2000	2100	2200	2300	2400	2500	2600	2700
TRP (dBm)	-1.35	-1.09	-0.64	-0.63	-0.55	-0.63	-1.49	-1.76	-0.79	-1.33	-3.33
Peak EIRP (dBm)	2.26	0.64	1.38	1.52	2.32	2.56	1.22	2.38	3.7	3	1.43
NHPRP +/- 45 (degree)	-1.22	-1.36	-1	-1	-0.93	-1.08	-1.81	-2.06	-1.07	-1.73	-4.09
NHPRP +/- 30 (degree)	-2.77	-1.87	-1.22	-1.21	-1.08	-1.2	-2.48	-2.37	-1.13	-1.68	-3.98
E-Theta Peak Gain (dBi)	-7.6	-11.2	-13.9	-14.1	-12.8	-10.3	-9.71	-8.94	-8.18	-11.3	-13.4
E-Phi Peak Gain (dBi)	2.25	0.62	1.36	1.51	2.29	2.55	1.17	2.34	3.68	3	1.42
E-Total Peak Gain (dBi)	2.26	0.64	1.38	1.52	2.32	2.56	1.22	2.38	3.7	3	1.43
Directivity (dBi)	3.61	1.73	2.02	2.16	2.88	3.19	2.7	4.14	4.49	4.33	4.77
Efficiency (%)	73.24	77.8	86.31	86.43	88.07	86.49	71.01	66.74	83.37	73.7	46.43