东莞市一佳电子通讯科技有限公司

Dongguan YiJia Electronics Communication Technology Co.,Ltd.

规 格 承 认 书

SPECIFICATION FOR APPROVAL

日 期 Date	2025/01/12
编 号 File No	25011202
版 本 Revision	1.0

客　　户 CUSTOMER: 道通

客户料号 CUSTOMER NO: IA1000WA

品　　名 PART NAME: WIFI双频 Antenna

供方料号 SUPPLIER NO: YJI01.005.022.301A

送样日期Date:　　送样数量Q“TY:

客户确认CUSTOMER APPROVED BY		
APPROVAL	CHIEF	SUPERVISOR

供方确认 SUPPLIER SIGNATURE		
APPROVAL	CHECK	DESIGN
ChenGuoqiang	WenXue	ChenXingyi

YJ-RD-F04-A

add：东莞市长安镇沙头社区木鱼路59号元富工业区 Tel:0769-82586086 Fax:0769-82586086

RoHS Compliant

CUSTOMER	
PART NO	

REV.	DESCRIPTION	DATE
A	首次发行	2025-01-12

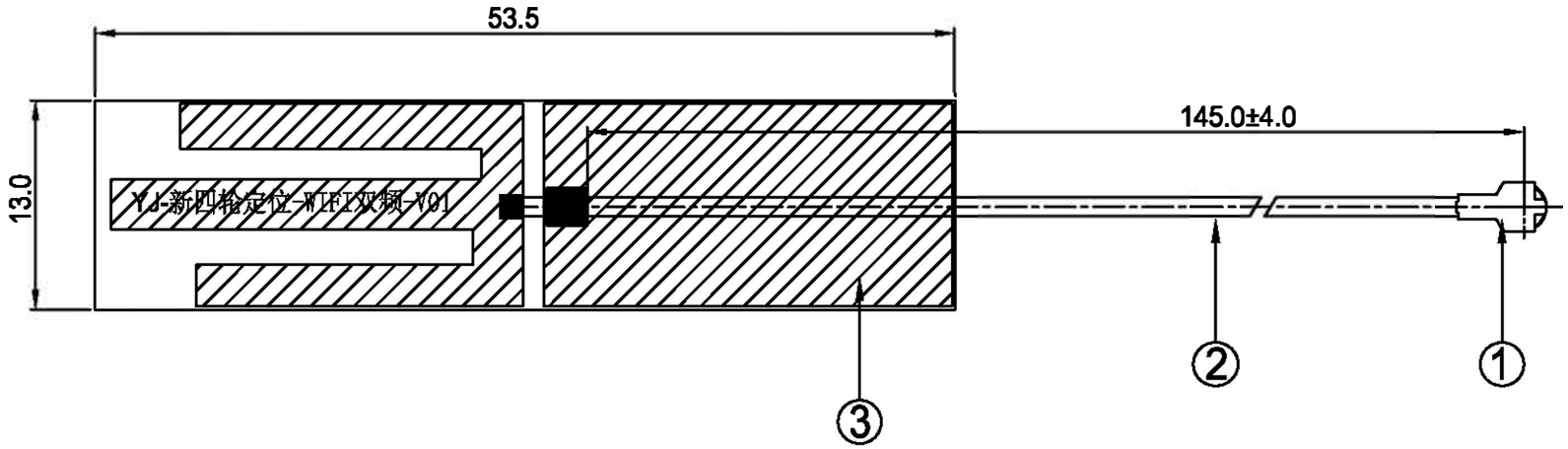

NO	PART NAME	DESCRIPTION	Material	Part Number	Q.TY
3	FPCB	53.5*13.0MM	FPCB	FPC1000XA.P01	1
2	Coaxial Cable	O.D.1.13 Black	O.D.1.13	COA1000XA.P01	1
1	Mini Connector	Au Plated 4代	Cu	TER1000XA.P01	1

东莞市一佳电子通讯科技有限公司
Dongguan YiJia Electronics Communication Technology Co.,Ltd.
Tel :0769-85535057
Fax:0769-81664308

PART NAME: WIFI双频 Antenna

PART NO.: YJI01.005.022.301A

DATE: 2025-01-12

APPROVED BY	CHECKED BY	DESIGNED BY	
殷涛	廖明宇	吕森桦	UNITS: mm SCALE: 1/1 REVISION: A

Tolerance
X.X ±0.50
X.XX±0.15
X° ±3°

天线规格
Antenna Specification

Electrical Properties	
Frequency	2.4-2.5GHz 5.15-5.85GHz
Impedance	50 Ohm Nominal
V.S.W.R	2.0 Max
Gain	WiFi： 3.4dBi@2.4-2.5GHz 2.0dBi@5.15-5.85GHz
Radiation	Omni-directional
Polarization	Linear
Physical Properties	
Connector	4代IPEX
Cable Type	O.D.1.13mm
Cable Length	145mm
Cable Color	Black
Operating Temp.	-40 ~ +85 ˚C
Storage Temp / Humidity	25±5˚C / <70%

add：东莞市长安镇沙头社区木鱼路59号元富工业区 Tel:0769-82586086 Fax:0769-82586086

Agilent E5071B	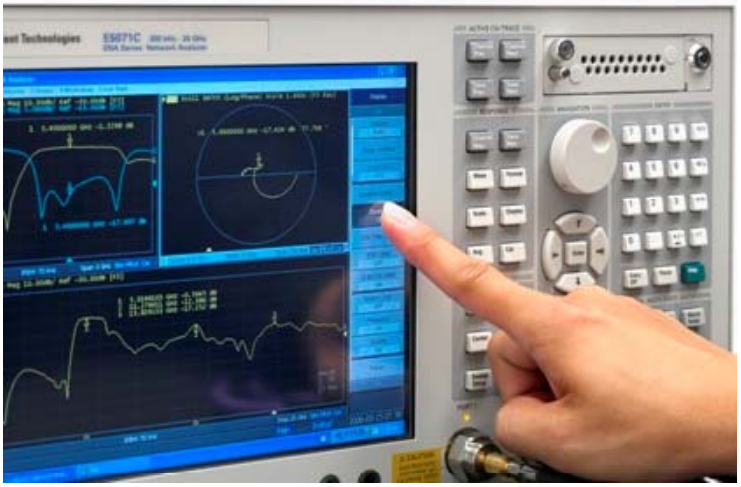
S Parameter Test // WIFI（1）Antenna	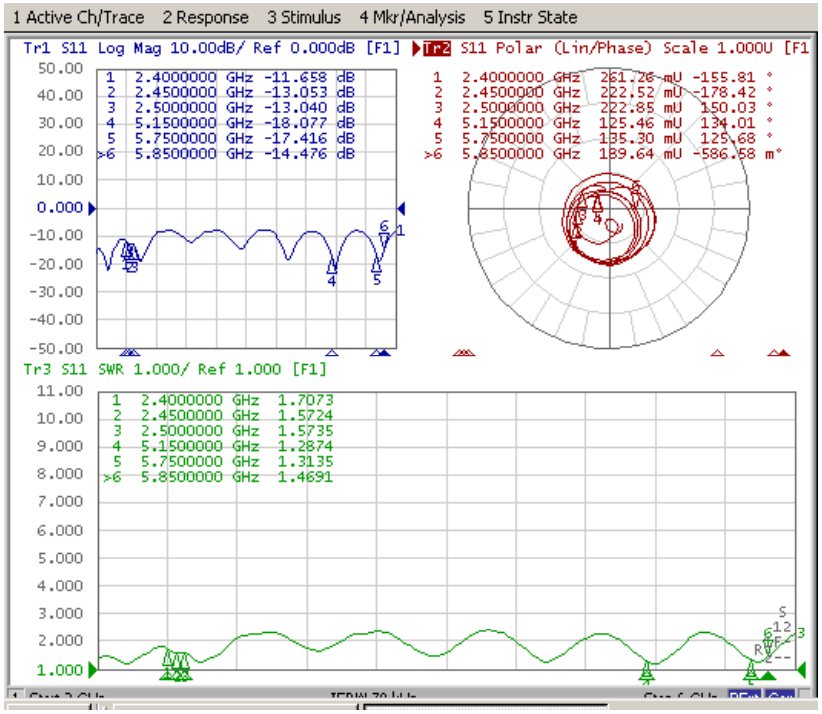

add：东莞市长安镇沙头社区木鱼路59号元富工业区 Tel:0769-82586086 Fax:0769-82586086

Antenna Passive Test

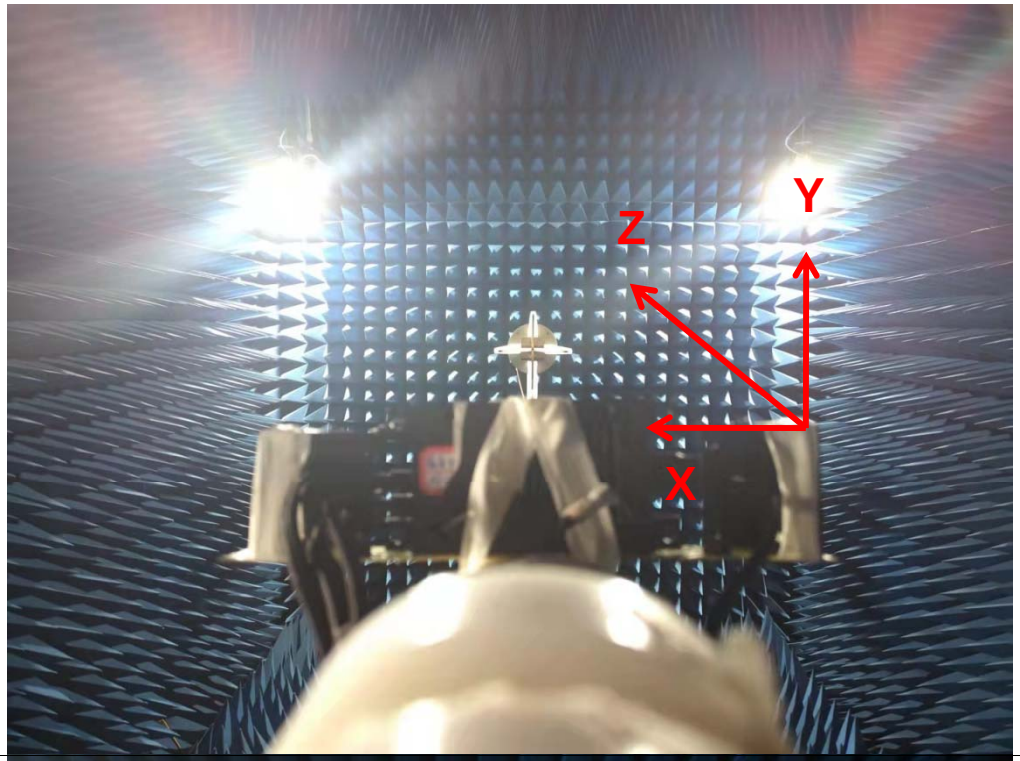

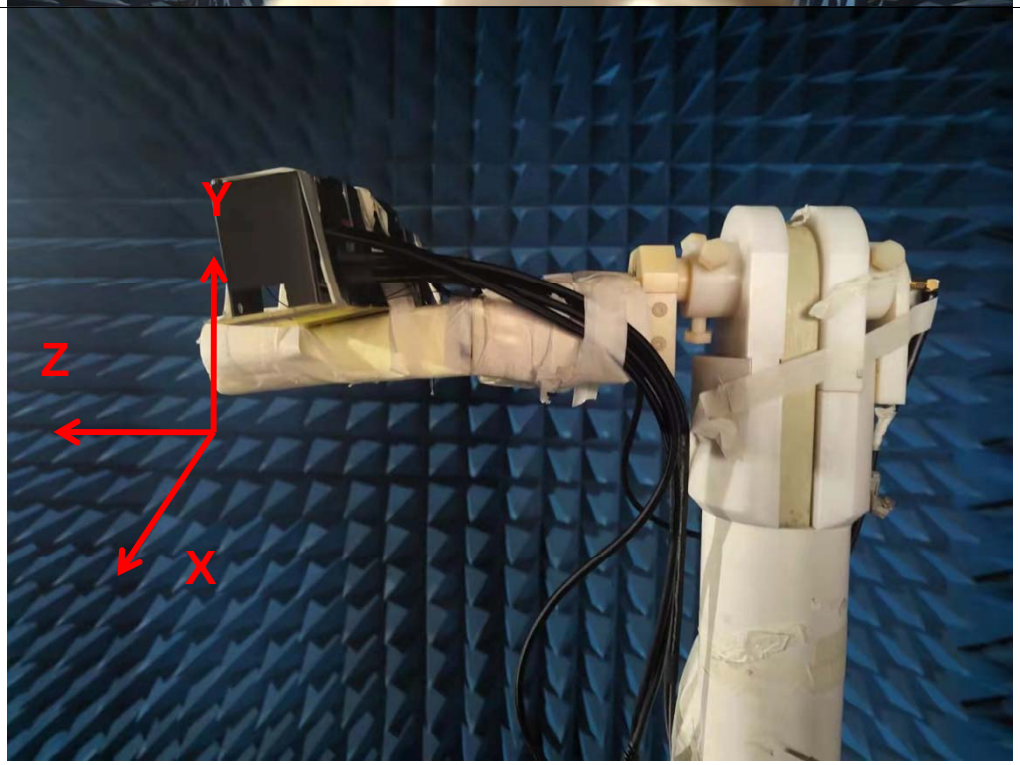

add：东莞市长安镇沙头社区木鱼路59号元富工业区 Tel:0769-82586086 Fax:0769-82586086

Passive Test For WiFi2.4G			
Freq (MHz)	Effi (%)	Effi (dB)	Gain (dBi)
2400	46.8	-3.3	3.0
2410	46.9	-3.3	3.1
2420	47.5	-3.2	3.3
2430	47.9	-3.2	3.4
2440	48.7	-3.1	3.4
2450	49.8	-3.0	3.4
2460	48.7	-3.1	3.4
2470	48.2	-3.2	3.4
2480	47.2	-3.3	3.2
2490	47.2	-3.3	3.2
2500	45.7	-3.4	3.0

add：东莞市长安镇沙头社区木鱼路59号元富工业区 Tel:0769-82586086 Fax:0769-82586086

Passive Test For WIFI5.8G			
Freq (MHz)	Effi (%)	Effi (dB)	Gain (dBi)
5450	41.3	-3.8	1.6
5500	42.5	-3.7	1.8
5550	43.8	-3.6	1.9
5600	44.9	-3.5	1.9
5650	45.6	-3.4	2.0
5700	44.8	-3.5	1.9
5750	44.7	-3.5	1.9
5800	42.1	-3.8	1.8
5850	41.6	-3.8	1.8

add：东莞市长安镇沙头社区木鱼路59号元富工业区 Tel:0769-82586086 Fax:0769-82586086

MATERIAL SAFETY DATA SHEET

物 质 安 全 资 料 表

1 、CHEMICAL PRODUCT AND COMPANY IDENTIFICATION 产品和公司资料

1.1PRODUCT MAME：Polyimide reinforcement plate

产品名称：Pi 补强片

1.2PRODUCT USE：Flexible printed circuit Boards.

用途：用于挠性印制电路板.

1.3Product Model 产品型号

Model:HS2025、HS3025、 HS4025、 HS5025、 HS6025、HS7025、 HS8025、 HS9025、 HS10025

1.4 公司名称及地址：深圳市溢海通电子有限公司

NAME of COMPANY and ADDRESS：Shenzhen YiHaiTong Electronics Co.,ltd

广东省深圳市宝安区沙井后亭第二工业区 57 号福新大厦 B 栋 602

Building B, Fuxin Chuangke Building,
No.57 Baoan District, Shenzhen, China

Shajing Houting Second Industrial Zone,

FOR MORE INFORMATION CALL：

紧急联络电话：（Monday～Saturday,9:00am～6:00pm）

0755-33238080

IN CASE OF EMERGENCY CALL：

（24Hours/Day, 7 Days/Week）

0755-33238080

2 、COMPOSITION INFORMATION ON INGREDIENTS 组成成份资料

2.1 The main ingredient 主要成分

Ingredient name chemical abstract number weight ratio 成分名称 化学文摘号 重量比

Polyimide film 25038-81-7 30-50% 聚酰亚胺薄膜 25038-81-7 30～50%

Remove 10-25% of the release film / paper when it is used 离形膜/纸 使用时撕掉 10～25%

Acrylates 141-32-2 25-40% 丙烯酸酯 141-32-2 25～40%

Acrylic acid 79-10-7 10-20% 丙烯酸 79-10-7 10～20%

2.2 hazardous ingredients 危害物质成分

No. SGS Test Report:No.CANML1412085401, No.CANML1412085402

2.3 Molecular Structure:分子结构

3 、HAZARDS IDENTIFICATION 危害性资料

3.1 hazard class filled by GB13690-92 " Classification of hazardous chemicals used and signs " requirement.：
危险性类别 按 GB13690-92《常用危险化学品的分类及标志》规定填写。
Insoluble in water, no melting point , soluble in acid, alkali .
不溶于水，无熔点，易溶于强酸、强碱。
3.2Anonflammable sheet material，Fumes if decomposed may irritate eyes、nose and throat..
是一种难燃的片状材料。当分解时产生的气体会刺激眼睛、鼻和咽喉。
POTENTIAL HEALTH HAZARDS：
3.3 Abrief description of the extent of environmental harm when hazards caused by certain concentrations of various chemical and biological harm .
环境危害 简要描述化学品在一定浓度时对各种生物造成的危害及其造成危害的程度。
Produces CO2 and CO decomposition.
分解时会产生 CO2 和 CO。
3.4SKIN：Adhesive may cause moderate skin irritation.
皮肤：胶粘剂可能导致中等程度皮肤过敏。
3.5EYES：Adhesive may cause eye moderate irritated，Fumes may irritate eyes.
眼睛：胶粘剂可能导致中等程度眼睛过敏。
3.6INHALATION： Trace of chemical solvents may diffused to air in the processes of varnish preparation and
coating production.
吸入物：在涂覆生产过程中，会有很少量化学溶剂挥发出来。
3.7INGESTION：Not determined.
摄食：没有参考值。
4 、FIRST AID MEASURES 首要援助措施
SKIN：Washing the contaminated clothing in flowing water.
皮肤：脱下已污染衣服，用流动水冲洗。
EYE：Washing with flowing water for 15 minutes，consult the physician If irritation persists.
眼睛：用流动水冲洗 15 分钟，如过敏现象持续发生，请求助于医生。
INHALATION ： Such as dust, smoke to much move to fresh air. If can not breathe, give mouth-to-mouth
resuscitation and Call physician.
吸入：如粉末烟尘太多请转移到有新鲜空气的地方，如没有呼吸，请进行人工呼吸，并致电医生。
INGESTION：If large amounts are ingested, consult physician.
摄食：如摄入大量，请致电医生。
ADVICE TO PHYSICIAN：Treat symptomatically.
建议医生：处理出现的症状。
5 、FIRE FIGHTING MEASURES 火灾测试
FLAMMABLE PROPERTIES：N/A
易燃烧性：不适用
FLASH POINT：N/A
闪点：不适用
FLASH POINT METHOD：N/A
闪点方式：不适用

AUTOIGNITION TEMPERATURE：Not determined
自燃点温度：无规定
UPPER FLAME LIMIT（Volume% in air）：N/A
燃烧上限：不适用
LOWER FLAME LIMIT（Volume% in air）：N/A
燃烧下限：不适用
FLAME PROPAGATION RATE（Solids）： UL94 V-0
燃烧等级： UL94 V-0
OSHAFLAMMABILITY CLASS：N/A
燃烧级别：不适用
EXTINGUISHING MEDIA：Water, CO 2 and dry chemical.
灭火介质：水、CO 2 及干化学品
SPECIAL FIREFIGHTING PRECAUTIONS/INSTRUCTIONS：
特别火灾指导：
Firemen should wear proper protective equipment and positive pressure self-contained breathing apparatus.
消防员须身穿保护装置及正压呼吸设施。
6 、ACCIDENTAL RELEASE MEASURES 意外事故的应变措施
IN CASE OF SPILL OR OTHER RELEASE：（Always wear recommended personal protection equipment）
如有泄漏或其他释放：（通常身穿所推荐的保护设施）
Not applicable for the solid material.
不适用于固体材料。
Spills and releases may have to be reported to local authorities.
有关泄漏应报告当地政府。
7 、HANDLING AND STORAGE 仓贮指南
7.1Handing Precautions refers to the process of the operation of the safety of chemicals and personal protection
points to note.
操作注意事项 指对化学品操作过程中的安全注意要点和个体防护。
No.
暂无.
7.2Storage Precautions 存储注意事项
a)disposal: storage spaces non fireworks ,sit housekeeping standards to prevent dust.
处置：存放场所严禁烟火，做好整理、整顿以避免灰尘。
b)Storage: high stability, non-reactive under normal storage conditions.
存储：稳定性高，正常的存储条件下无反应。
8 、EXPOSURE CONTROLS ／PERSONAL PROTECTION 泄漏控制／个人保护
ENGINEERING CONTROLS：Use local exhaust ventilation to control dust..
工程控制：使用当地除尘通风设施。
PERSONAL PROTECTIVE EQUIPMENT：个人保护措施：
SKIN PROTECTION： For brief contact to dust,no precautions other than clean bodycovering clothing should
needed.Use gloves and aprons when prolonged or frequently repeated contactoccurs.

皮肤保护：对于短暂性的接触粉尘，需要时清洗身体或衣服，无预防措施。对于长期性的接触，要配
带手套和围裙。
EYE PROTECTION：Use appropriate eye protection when machining material.
眼睛保护：当加工材料时使用眼睛保护装置。
RESPIRATORY PROTECTION：When respiratory protection is required for certain operations, use a NIOSH-approved dust respirator.
呼吸保护：当进行产生大量粉尘的操作时使用规范的粉尘防毒面罩。
ADDITIONAL RECOMMENDATIONS：N/A
其它建议：不适用。
9 、PHYSICAL AND CHEMICAL PROPERTIES 物理化学性能
9.1Appearance products 产品外观
Yellow 、brown 、black and so on，odorless solid flake materials
黄色，棕色和黑色等，无味固体片状材料。
9.2PHYSICAL STATE：Solid
物理形态：固体
9.3ODOR：None，unless heated
气味：无味，除非加热
9.4Heat of combustion
燃烧热 94-V0
9.5SOLUBICITY IN WATER：（Weight%） Negligible in water
水溶性：（重量％）在水中可忽略
9.6The main purpose 主要用途
Mainly used in packing, printing, screen printing, pad printing, nameplates, membrane switches, flexible circuits,
Insulation products, circuit boards, laser security, laminating , electronic, film sealing material, reflective materials,
Waterproof material, medicine(plaster with paper),toilet paper, adhesive, die punching processing and other
industries.
主要应用于包装、印刷、丝印、移印、铭板、薄膜开关、柔性线路、绝缘制品、线路板、激光防伪、
贴合、电子、密封材料用膜、反光材料、防水材料、医药（膏药用纸）、卫生用纸、胶粘制品、模切冲型
加工等行业领域。
10 、STABILITY AND REACTIVITY 稳定性及反应性
10.1NORMALLY STABLE：（conditions to avoid）Stable
通常稳定：稳定
10.2INCOMPATIBILITIES：Not determined
不兼容性：不确定
10.3HAZARDOUS POLYMERIZATION？ None
危险聚合物：无
10.4Condition to avoid 避免接触的条件
Not available：无资料

10.5Decompositon products 分解产物
Produces Co 2 and Co decomposition.
分解时会产生 Co 2 和 Co.
11 、TOXICOLOGICAL INFORMATION 毒物学的资料
11.1Acute Toxicity 急性毒性
N/A
11.2Subacute and chronic toxicity 亚急性和慢性毒性
N/A
11.3Irritating 刺激性
N/A
11.4Sensitization 致敏性
N/A
11.5Mutagenicity 致突变性
N/A
11.6Carcinogenicity 致癌性
N/A
11.7Other 其他
N/A
12 、ECOLOGICAL INFORMATION 生态学资料
Not Biodegradable
非生物降解。
13 、DISPOSAL CONSIDERATIONS 处置问题
Is the unused product a hazardous waste substances list of country hazardous waste if discarded？No.
列入国家危险废物名录的危险废物不能够再利用时是否被丢弃？ 不。
OTHER DISPOSAL CONSIDERATIONS ： Dispose must be made in accordance with all applicable Local
regulations.
其它处置问题：处置必须遵循当地的法律法规。
Suggestion method after products will be discarded ：
⑴、Separate reuse method：crush products into powder, recycling as a filer.
⑵、Incineration method：incinerate the unused products, this method may cause organic compound gas.
⑶、Bury into deep earth.
产品报废之后有以下几种处置方法：
⑴、分离法：将产品粉碎，可作填充料；
⑵、焚烧法：焚烧过程中可能产生有机化合物气体；
⑶、填埋法。
14 、TRANSPORT INFORMATION 运输资料
For additional information on shipping regulations affecting this material,contact the information number found
on the first page.
附带资料是当运输规则影响到物料时，请和第一页所提供的联系方式联系。
15 、REGULATORY INFORMATION 法规资料

15.1Domestic Chemical Safety regulations 国内化学品安全管理法规

“Material Safety Data Sheet preparation specified range” GB/T 16483-2008

《化学品安全技术说明书编写规定范围》GB/T 16483-2008

“Chemical Dangerous Goods Safety Management Regulations”(February 17,1987 the State Council issued).

《化学危险物品安全管理条例》（1987 年 2 月 17 日国务院发布）

“Common Hazardous Chemicals and signs”(GB13690-1992).

《常用危险化学品的分类和标志》（GB13690-1992）

“Air Pollutant Emission Standards”GB16297-1996

《大气污染物综合排放标志》GB16297-1996

“Sour gas transportation safety regulations”SY6506-2000

《含硫气田安全输送规程》SY6506-2000

“Chemical Dangerous Goods Safety Management Regulation implementing rules”(the Labor Fa[1992] No.677)

《化学危险物品安全管理条例实施细则》（化劳发【1992】677 号）

“Industrial sites safe use of chemicals”(1996 workers are No.423)

《工业场所安全使用化学品规定》(1996 劳都发 423 号)

“Dangerous Goods Classification and code ”GB6944-1986

《危险货物分类和品名编号》GB6944-1986

“Transport of Dangerous Goods Package CATEGORYprinciple” GB/T15098-1994

《危险货物运输包装类别划分原则》GB/T15098-1994

“Transport of Dangerous Goods Management Regulations”(formerly the Ministry of Railways issued)1995

《危险货物运输管理规则》（原铁道部颁布）1995 年

These laws and regulations for the safe use of hazardous chemicals, production, storage, transport, handling, etc.

are made relevant regulations.

以上法规对化学危险品的安全使用，生产，存储，运输，装卸等方面均做了相关规定。

附加法规资料：

Shenzhen YIHAITONG Electronic Co., Ltd. does not use PBBs or PBDEs as flame retardant in the resin system of the products 深圳市溢海通电子有限公司 没有采用多溴联苯或多溴联苯醚作为阻燃剂在产品的树脂体系当中

16 、OTHER INFORMATION 其它资料 CURRENT ISSUS DATE：现在版本日期：2015-11-12

PREVIOUS ISSUE DATE：2014-6-25 首次版本日期：2014-6-25

Material Safety Data Sheet

ITEM : PSM-800@ /SMH-800

Identity (Trade Name As Used On Label)

SECTION 1 IDENTIFICAT ION

Manufacturer

UNIRES CHEMICAL INDUSTRIAL CO.,LTD.

Address

22CHING CHIAN 4th RD.KUANYIN INDUSTRIAL

DISTRICT TAOYUAN HSIEN TAIWAN

Phone Number (For Information)

886-3-4836651 (fax)886-3-4837487

Emergency Phone Number

Telex＊ **886-3-4836651**

MSDS Number* 20110701AAA

CAS Number*

07/01/2011

Data Prepared

HUANG CHIN HUAI

Prepared By*

Note：Blank spaces are not permitted. If any item is not applicable, or no information is available, the space must be marked to indicate that.

SECTION 2 COMPOSITION/INFORMATION ON INGREDIENTS

INGREDIENTS	CAS No.	CONTENTS(%)	OSHA (PEL)	ACGIH (TLV)
Heavy aromtic naphtha(petroleum)	64742-94-5	＜12%	N.D.	N.D.
Epoxy-Acrylic derivative	Trade secret	＜48%	N.D.	N.D.
Barium sulfate	7727-43-7	＜20%	dust 15mg/m3	10mg/m3
Silica, amorphous, fused	7631-86-9	＜8%	N.D.	dustTLV10mg/m3
Dipropylene glycol methyl ether	34590-94-8	＜12%	100ppm	200ppm

SECTION 3 HAZARDS IDENTIFICATION

INHALATION : Highly concentrated vapor irritates nose, throat ant and lungs. May cause headache and dizziness.

EYE CONTACT : Slight irritation

SKIN CONTACT : Slight irritation

INGESTION : Harmful, if swallowed.

SECTION 4 FIRST AID MEASURES

SKIN CONTACT : Wash with plenty of water using a soap. Do not use organic solvents.

EYE CONTACT : Rinse immediately with clean water for at least 15 minutes. If irritation persists, seek medical attention

INHALATION : Immediately carry the victim to a place where fresh air is available. If irritation persists, treat with oxygen and seek medical attention.

INGESTION :obtain medical advice immediately. It is not recommended that vomiting be induced except on medical advice

SECTION 5 FIRE-FIGHTING MEASURES

SUITABLE EXTINGUISHING MEDIA : Carbon dioxide, foam, powder.
UNSUITABLE EXITINGUISHING MEDIA : water spray and water jet.
EXPOSURE HAZARDS : Burning may release oxides of carbon, nitrogen, sulfur and other toxic gases or vapors. Do not release chemically contaminated water into drains or surface waters, and soil according to local regulations.
PROTECTIVE EQUIPMENT : Use full protective clothing and self-contained breathing apparatus.
FIR FIREFIGHTERS MEASURES : promptly move transferable containers to another safety area .Check the speed of fire. Extinguish the fire with suitable extinguisher from the windward side

SECTION 6 ACCTDENTAL RELEASE MEASURES

PERSONAL PRECAUTION : Avoid ignition sources. Avoid contact with skin, eyes and clothing. Avoid inhalating vapor.
ENVIRINMENTAL PRECAUTIONS : Prevent contamination of soil, drains and surface waters
METHODS FOR CLEANING : Scoop up or absorb into combustible material, wipe out a stain in use organic solvents. Dispose in accordance with local regulations.

SECTION 7 HANDLING AND STORAGE

HANDLTNG : Handle with care. Avoid ignition sources. Ensure good ventilation and local exhaust. Do not smoke at the workplace
STORAGE : Store in the original sealed container at less than 20℃.Avoid direct exposure to UV and sunlights.

SECTION 8 EXPOSURE CONTROLS/PERSINAL PROTECTION

People who know they are chemically sensitive, should avoid contact with this product.
TECHNICAL PROTECTIVE MEASURES : No special safety measures required.
EXPOSURE CONTROL LIMITS : (see PEL and TLV values shown in shown in section 2)
RESPIRATORY PROTECTION : Wear suitable mask to avoid inhalation of vapor.
HAND PROTECTION : wear chemical resistant gloves.
EYE PROTECTION : wear safety glasses.
SKIN PROTECTION : wear suitable protective working cloths.

SECTION 9 PHYSICAL AND CHEMICAL PROPERTIES

BOILING	: *156℃(760mmHg)	COLOR	: black
FLASH	: 75.0℃	FORM	: Paste
VAPOR PRESSURE	: * 2.00mmHg(40℃)	VAPOR DENSITY	: *6.08(Air=1)
SOLUBILITY IN WATER	: *＜10.7wt%	ODOR	: Mild odor
		SPECIFIC GRAVITY	: 1.18

*Data of the organic solvents or monomers contained in this product is product is quoted.

SECTION 10 STABILITY AND REACTIVITY

STABILITY : Stable
CONDITIONS TO AVOID : Heat and sunlight.
MATERIALS TO AVOID : Strong acids, strong bases, peroxides and strong oxidizing agents.
HZARDOUS DECOMPOSITION PRODUCTS : Burning may release oxides of carbon, nitrogen, sulfur and other toxic gases or vapors.

SECTION 11 TOXICOLGICAL INFORMATION

PRIMARY ROUTE(S) OF ENTRY
■DERMAL ■ INHALATION ☐INGESTION
TOXICITY STUDIES : Toxicity studies have not been carried out in this product. Toxicity information available for the ingredients listed in section 2 is given below.
HEALTH HAZARDS
ACUTE INGESTION TOXICITY : N.E.
ACUTE SKIN IRRITATION : Slightly irritant
MUTAGENICITY : NONE
CARCINOGENICITY
☐NTP ☐ IARC ☐ OSHA ■ NOT LISTED
SYMPTOMS OF OVER EXPOSURE
INHALATION : Slight irritation to respiratory tract. Highly concentrated vapor may cause headaches, and nausea.
EYES : Slight irritation
SKIN : Slight irritation
INGESTION : Expected to have a low order of toxicity.

SEVTION 12 ECOLOGICAL INFORMATION

ACUTE FISH TOXICITY : Ecological data are not available
BIODEGRADABITLITY : No data available.

SEVTION 13 DISPOSAL CONSIDERATIONS

Incineration or landfill in accordance with local regulations.

SEVTION 14 TRANSPORT INFORMATION

ADR : Inflammable liquid
IMDG-CODE : Free
IATA : Free
US DOT : Combustible liquid

UN : Free
FLASH POINT : 75.0℃

SECTION 15 REGULATORY INFORMATION

EEC LABELING : Harmful

RISK PHRASES : Harmful : may cause lung damage if swallowed. Harmful to aquatic organisms, may cause long-term adverse effects in the aquatic environment.

SAFETY PHRASES : Avoid contact with skin.
: Do not breathe vapor.
: If swallowed, do not induce vomiting :seed medical advice immediately and show this container or label.
: Avoid release to the environment. Refer to special instructions/Safety data sheets.

SECTION 16 OTHER INFORMATION

This product should be stored, handled and used in accordance with good industrial hygiene practices and in conformity with any legal regulation. The information contained herein is based on the present state of our knowledge and is intended to describe our products from the point of view of view of safety requirements. It should not therefore be construed as guaranteeing specific properties.
It may not be valid for this material, if used in combination with any other materials.

Material safety data sheet

Article and manufacturer informatio

Item name :KTM-150F WM
Ohter name: NONE
Recommended use: heat hardening printing ink
Name of manufacturer or supplier: supplier - keyway Technology Co., Ltd Manufacturer - kaiyao Technology Co., Ltd Address of manufacturer or supplier: supplier - No.18, Lane 646, Boai street, Zhubei City, Xinzhu County Factory - No.18, Lane 646, Boai street, Zhubei City, Xinzhu County Emergency contact: (03) 555-1822 Fax: (03) 553-1338

Hazard identification data

Hazard classification: flammable liquid, fire hazard Category 3, acute toxicity category 5.
Label content: flammable mixed solvent   Symbols: warning: Hazard warning message: flammable substances, may be harmful if inhaled. Hazard prevention measures: tightly cover the container; keep away from the ignition source - no smoking; place the container in a well ventilated place; take off the clothes as soon as they are polluted; wear eye mask / face shield; do not eat or drink when using, and avoid release to the environment
Other hazards:

Component identification data

INGREDIENTS	% by Wt	CAS No.
Polyester resin (polymer)	20~25%	28064-14-4
Mixed solvent	20~25 %	106-65-0；1119-40-0；627-93-0
Titanium dioxide	30~35%	13463-67-7
Filler	10~15 %	14807-96-6
Hexamethylene diisocyanate refers to oligomer	5~10 %	21093-51-6
Butyl acetate	1~5 %	627-93-0

First aid measures

First aid methods of different exposure routes: Inhalation:1. remove the patient to fresh air immediately. It can only cause nose irritation and may be harmful to people. Skin contact: 1. Immediately wash with water. Eye contact: 1. Immediately open the eyelids and wash them with mild water. Ingestion:
Most important symptoms:
Protection for first aid personnel: wear protective gloves to avoid contact with pollutants.
Tips for doctors:.

Fire fighting measures

Suitable extinguishing agent: dry powder

Special hazards that may be encountered during fire fighting:

Special fire fighting procedures: 1. Remove the container from the fire site and put out the fire in the upwind.

2. Stop leakage without endangering personnel safety.

3. If the leakage cannot be stopped and the surrounding area is empty, the fire will burn out.

Special protective equipment for firefighters: Firefighters must wear air breathing apparatus, fire clothing and protective gloves.

Leakage treatment method

Personal precautions: 1. Restrict personnel access until the overflow area is completely clean.

2. It is determined that the trained personnel are responsible for the cleaning work.

3. Wear appropriate personal protective equipment.

Environmental precautions:

1. Ventilate the area.
2. Extinguish or remove all sources of ignition.
3. Report to relevant units of safety, health and environmental protection of the government.

Cleaning method: 1. Do not touch the leakage. 2. Avoid discharging into sewer or other confined space. 3. Try to prevent or reduce the leakage under the condition of safety permission. 4. Use sand, soil or other absorbing substances that do not react with leakage substances to enclose the leakage. 5. In case of a small amount of leakage, absorb it with absorbent that will not react with the leakage. Contaminated absorbents and spills are equally hazardous and should be placed in properly capped and labeled containers. Flush the spill area with water. 6. In case of a large number of spills, contact the fire department, emergency treatment unit and supplier for assistance.

Safe handling and storage methods:

Without special measures, it is not inflammable and explosive.

Storage: no corrosive container, no reactivity, low flammability, non flammable.

Exposure precautions

Engineering control: local exhaust device or integral air exchange device.

Control parameters: eight hour daily average allowable concentration / short time average allowable concentration / maximum allowable concentration:

Personal protective equipment: respiratory protection:

Hand protection: impervious gloves, butyl rubber recommended, Tefion, 4h, barricale, chemrel

Eye protection: 1. Goggles (minimum 8 inches). 2. splash proof safety goggles. 3. Do not wear contact lenses. Skin and body protection: chemical protective clothing.

Physical and chemical properties

Material state: viscous paste liquid shape: paste liquid

Color: smell: Fragrance

PH value: slightly acidic boiling point / melting point range: OC /---

Decomposition temperature: flash point not measured:

Test method: open cup and close cup

Autoignition temperature: explosion limit: LEL: uel:

Vapor pressure: vapor density: ＞ 1 (air 1)/

Specific gravity: 1.2 ~ 1.4 (25 / 25 ℃) for water solubility:

Stability and reactivity

Stability: under normal conditions

Possible hazardous reactions under special conditions:

Conditions to avoid:

Substances to be avoided: acids.

Hazardous decomposition:

Toxicity data

Exposure route: skin contact, eye contact, ingestion

Symptoms: eye damage

Acute toxicity: inhalation:

Skin: causes mild irritation. Eyes: cause mild irritation. Ingestion:

LD50 (test animal, absorption pathway) local effect:---

Sensitization:---

Chronic toxicity or long-term toxicity:

Special effect:.

Ecological data

Ecotoxicity:

Durability and degradability:

Bioaccumulation:

Mobility in soil:

Other adverse effects:

Waste disposal method

Waste disposal method:

1. Handle according to the current laws and regulations.

Consider sanitary burying or burning in a qualified solvent burning tower.

Delivery information

UN No:

UN transport Name:

Transportation hazard classification:

Packing category:

Marine pollutants (yes / no):

Special delivery methods and precautions:-

Other information

References: None

Prepared by: kaiyao Technology Co., Ltd. / No.18, Lane 646, Boai street, Zhubei City, Xinzhu County/ Tel:03-5551822 / Fax:03-5531338

Prepared by: Xie Jinquan

Prepared on: August 15, 2014

Note: the above information and data are for reference only. The user shall determine the feasibility of the application according to the application requirements.

Material safety data sheet

一、Goods and manufacturer information

Item name: Halogen-free polyimide copper foil substrate(Halogen-free PI -CCL)
Item number: SHIS or SHID
Name of the manufacturer or supplier / Address / Telephone/Portraiture: Suzhou Serengeti Electronic Material Co.,Ltd./NO.168 north Taiping road,Taicang city ,Jiangsu Province,China/0512-5337 8333/0512-5337 8355
Emergency contact number/Phototelephony : 0512-5337 8333/0512-5337 8355

二、Component identification data

Pure substance :

Chinese and English names: 1. Halogen-free epoxy resin adhesive 2. Polyimide film 3. 3. Copper foil
Synonymous name: -
Chemical Abstracts Agency Registration Number(CAS No.): 1.(Halogen-free epoxy resin adhesive) 24969-06-0 25% ～ 41.2% 2. (Polyphenylene amine membrane) 25038-81-7 17.4% ～ 39.6% 3. (Copper foil) 7440-50-8 28.7% ～ 48%
Hazardous substance composition(percentage composition): < 15(Halogen-free epoxy resin adhesive)

三、Hazard identification data

Most important harm and effect	Health hazard effect: No harm to the human body。
	Environment effects: -
	Physical and chemical harm: -
	Special harm: -
Cardinal symptom: -	
Hazardous classification of articles: -	

四、Emergency treatment

First aid methods for different ways of exposure: Inhalation: There is no way to inhale the film. Skin contact: No stimulation. Eye contact: No volatiles are allowed to touch. Ingestion: There is no possible way for the film.
Most important symptoms and harmful effects: -
Protection of first aid personnel: -
Tips for doctors: -

五、Fire extinguishing measures

Applicable fire-extinguishing agent: Use a fire extinguishing agent suitable for isolating the fire site.
Special hazards that may be encountered at the time of fire-fighting: Inhalation of high-temperature pyrolysis substances.
Special fire-fighting program: -
Special protective equipment for firefighters: Wear air respirator and

protective gloves and fire-fighting clothes.

六、Emergency strain of leakage

Individual considerations: Use of personal protective equipment.
Environmental consideration: -
Cleaning method: -

七、Safety disposal and storage method

Handle: When operating, isolate from food and beverage.
Lay in: Store in a cool, dry and well-ventilated place.

八、Exposure prevention measures

Engineering control: -
Controlling parameter: Average allowable concentration of eight hours per day/Short time average allowable concentration/Maximum allowable concentration: - Biological index: -
Personal protective equipment: Respiratory protection : A dust-proof mask. Hand protection : Gloves. Eye protection: Safety glasses. Skin and body protection: -。

九、Physical and chemical properties

Material state:	Solid body	Form:	Membrane shape
Pigment:	Light brown ~ Dark brown(PI side)	Smell:	not have
PH value :	N/A	Boiling point/Boiling spread :	N/A
Decomposition temperature :	N/A	Flash point :	N/A test method : Open cup Closed cup
Autogenous ignition temperature :	N/A	Explosion limit :	N/A
Vapour pressure:	N/A	Vapour density :	N/A

十、Stability and reactivity:

Stability:	Stable under normal condition
Possible hazardous reactions in special conditions:	-
The situation to be avoided:	-
Substance to be avoided:	-
Hazardous decomposition products:	High thermal decomposition to produce nitrogen, phosphorus oxidation gas.

十一、Toxic data

Acute toxicity:	N/A
Local effect :	N/A
Sensitivity:	N/A

Chronic or long-term toxicity:	N/A
Special effects :	N/A

十二、Ecological data

Possible environmental impact/Environmental flow cloth: -

十三、Disposal method

Handle according to local environmental laws and regulations.

十四、Transport information

International shipping regulations:	Not available for IATA,ICAO. (Non-dangerous goods)
UN number :	--
Domestic transportation regulations:	--
Special delivery methods and matters needing attention:	--

十五、Regulatory data

Applicable regulations: Applicable to RoHS,GP,WEEE.

十六、Other data

Rdocumentation :	--		
Tabulating unit:	Name:	Suzhou Serengeti Electronic Material Co.,Ltd.	
	Address/Telephone:	NO.168 north Taiping road,Taicang city ,Jiangsu Province/ 0512-5337 8333	
Lister:	Professional ranks and titles: Department Manager		Name: Huang long
Tabulation date:	16 February, 2019		
Remarks:	The symbol "-" in the above data indicates that there is no relevant information at present. All data and data are used for reference only. Users should judge their availability according to the application requirements.		

MATERIAL SAFETY DATA SHEET

产 品 安 全 资 料

Section1 Preparation Identification and Company 样品标公司

Preparation Identification 标记： 防氧化原液DX-808HT

Manufacturers Name 公司名称： 深圳市东方星化工科技有限公司

Manufacturers Address 地址： 东莞市虎门镇大宁村大板地工业区

Emergency Telephone Number 联系电话：0769-85015502

Emergency Tex Number 传真：0769-85015500

Postal code 邮政编码：523900

Section 2 Composition information on Ingredients 成份组成

学名 (Chemical Name)	化学文摘社登记号码 (CASNO)	浓度(%) (Concentration)
苯并咪唑 Benzimidazole	95-14-7	1%
甲酸 Formic acid	64-18-6	3%
添加剂 Additives	----------	0.05%
DI 水DI water	7732-18-5	95.95%

Section 3 Hazards Identification 危险性概述

Safety and Risk 安全和危险性: DX-808HT contain formic acid which may cause severe burns. 含有甲酸可能导致灼伤

Section 4 First Aid Measures 急救措施

Eyes 眼睛：flush with plenty of clean, cool water for 15 minutes and get immediate medical attention 大量清水冲洗并尽快就医

Skin 皮肤: flush with plenty of clean, cool water for 15 minutes 大量清水冲洗15 分钟

Ingestion 食入: get immediate medical attention 尽快就医

Section 5 Fire Fighting Measures 消防措施

不可燃

Section 6 Accidental Release Measures 泄漏应急措施

Personal Precautions 个人防护: wears protective clothing, chemical safety goggles,respirator, face shield and rubber gloves 穿戴耐酸保护服，护目镜、面罩和橡胶手套

Clean-up Procedure 清洗:flush with plenty of clean, cool water 用大量清水冲洗

Section 7 Handling and Storage 操作与储存

Ventilation 通风: Store indoors in a cool dry area 阴凉干燥处

Temperature 温度: Store indoors in a cool dry area 阴凉干燥处

Containers 容器: Keep containers tightly closed 。Loosen closure cautiously whenopening。保持容器密封，打开时慎重

Incompatible Materials 不相容物质: alkalis and oxidizers 碱性和氧化物

Pot Life 有效期： six months 6 个月

Section8 Exposure Controls /Personal Protection 接触控制与个人保护

Ventilation 通风: Exhaust ventilation is recommended 推荐抽出式通风

Respiration 呼吸: respirator。Avoid breathing vapors or mist。防毒面具避免吸入蒸汽或烟雾
Eyes and Face 眼睛和脸: chemical safety goggles and face shield 护目镜和脸罩
Hands and Skin 手和皮肤:rubber gloves 橡胶手套
Clothing : protective clothing 耐酸保护服
Section 9 Physical and Chemical Properties 物理和化学特性
Appearance 外观：浅蓝色液体
Odour 气味：淡醋酸味
PH：2.7±0.3
Section 10: Stability and Reactivity 稳定性和反应活性
Chemical Stability 化学稳定性： 弱的反应能力
Incompatible Materials 不相容物质：alkalis and oxidizers 碱性和氧化物
Section 11 Toxicological Information 毒性资料
NDA 无毒
Section 12 Disposal Consideration 废弃处理
Dispose of material in approved sites 中和后过滤排放，过滤物交当地合法批准单位。
Section 13 生态资料
生态毒性：无
生物降解性：无
非生物降解性：无
其它有害作用：无
Section 14 法规信息
通用法规：
劳工安全卫生规则
特定化学物预防标准
Section 15 运送资料
国内运输规定：依道路交通安全规则第84 条
Section 16 其他资料
制表单位：深圳市东方星化工科技有限公司
制表地址：东莞市虎门镇大宁村大板地工业区
制表部门：品质部
制表日期：2017 年 1 月

Article Information Sheet

Copyright,2015,3M Company.
All rights reserved. Copying and/or downloading of this information for the purpose of properly utilizing 3M products is allowed provided that: (1) the information is copied in full with no changes unless prior written agreement is obtained from 3M, and (2) neither the copy nor the original is resold or otherwise distributed with the intention of earning a profit thereon.

This product is defined as an article based on the definition of an Article under China New Chemical Environmental Management Method MEP Decree No. 7, and does not require a Safety Data Sheet under Dangerous Chemical Safety Management Regulatory China State Council Decree No.591 and China GB/T16483-2008 Safety Data Sheet for Chemical Products Content and Order of Sections. This article information sheet (AIS) is provided as a courtesy in response to a customer request. When used as recommended or under ordinary conditions, the product should not present a health and safety hazard. However, use or processing of the product not in accordance with the product's recommendations or not under ordinary conditions may affect the performance of the product and may present potential health and safety hazards.

Document Group:	07-7168-3	**Version Number:**	1.00
Issue Date:	2015/05/19	**Supercedes Date:**	Initial Issue

SECTION 1: Identification

1.1. Product identifier
3M™ 300LSE Adhesive Transfer Tapes: 8132LE, 8153LE, 9453FL, 9453LE, 9471FL, 9471LE, 9472FL, 9472LE, 9472LEU, 9653LE, 9671LE, 9672LE and 9698LE

Other means of identification

1.2. Recommended use and restrictions on use

Recommended use
Bonding & Attachment, Industrial use

1.3. Supplier's details
Company: 3M Company
Division: Industrial Adhesives and Tapes Division
ADDRESS: 3M Center, St. Paul, MN 55144,USA
Phone: 021-22105335
FAX: 021-22105036
E Mail: Tox.cn@mmm.com
Website: www.3m.com.cn

1.4. Emergency telephone number
021-22105335

SECTION 2: Hazard identification

2.1. Classification of the substance or mixture
This product is considered to be an article and is exempt from GHS classification.

SECTION 3: Composition/information on ingredients

This material is a mixture.

Ingredient	C.A.S. No.	% by Wt
Paper or Film Liner	Mixture	Not Applicable
Acrylic Polymer Adhesive	Trade Secret	100

SECTION 4: First aid measures

4.1. Description of first aid measures

Inhalation:
No need for first aid is anticipated.

Skin Contact:
No need for first aid is anticipated.

Eye Contact:
No need for first aid is anticipated.

If Swallowed:
No need for first aid is anticipated.

SECTION 5: Fire-fighting measures

In case of fire: Use a fire fighting agent suitable for ordinary combustible material such as water or foam.

SECTION 6: Accidental release measures

6.1. Personal precautions, protective equipment and emergency procedures
Not applicable.

6.2. Environmental precautions
Not applicable.

6.3. Methods and material for containment and cleaning up
Not applicable.

SECTION 7: Handling and storage

7.1. Precautions for safe handling
This product is considered to be an article which does not release or otherwise result in exposure to a hazardous chemical under normal use conditions.

7.2. Conditions for safe storage including any incompatibilities
No special storage requirements.

SECTION 8: Exposure controls/personal protection

This product is considered to be an article which does not release or otherwise result in exposure to a hazardous chemical

under normal use conditions. No engineering controls or personal protective equipment (PPE) are necessary.

SECTION 9: Physical and chemical properties

9.1. Information on basic physical and chemical properties

Physical state	Solid
Specific Physical Form:	Roll of Tape
Appearance/Odor	Translucent adhesive, slight acrylate odor, paper or fim quick release liner
Odor threshold	*Not Applicable*
pH	*Not Applicable*
Melting point/Freezing point	*No Data Available*
Boiling point/Initial boiling point/Boiling range	*Not Applicable*
Flash Point	*Not Applicable*
Evaporation rate	*Not Applicable*
Flammability (solid, gas)	Not Classified
Flammable Limits(LEL)	*Not Applicable*
Flammable Limits(UEL)	*Not Applicable*
Vapor Pressure	*Not Applicable*
Vapor Density	*Not Applicable*
Density	*Not Applicable*
Relative Density	*Not Applicable*
Water solubility	Nil
Solubility- non-water	*Not Applicable*
Autoignition temperature	*Not Applicable*
Decomposition temperature	*Not Applicable*
Viscosity	*Not Applicable*
Volatile Organic Compounds	*Not Applicable*
Percent volatile	*Not Applicable*
VOC Less H2O & Exempt Solvents	*Not Applicable*

SECTION 10: Stability and reactivity

This material is considered to be non reactive under normal use conditions.

SECTION 11: Toxicological information

Inhalation:
This product may have a characteristic odor; however, no adverse health effects are anticipated.

Skin Contact:
No health effects are expected

Eye Contact:
No health effects are expected

Ingestion:
No health effects are expected

Additional Information:
This product, when used under reasonable conditions and in accordance with the directions for use, should not present a health hazard. However, use or processing of the product in a manner not in accordance with the product's directions for use

may affect the performance of the product and may present potential health and safety hazards.

SECTION 12: Ecological information

This article is expected to present a low environmental risk either because use and disposal are unlikely to result in a significant release of components to the environment or because those components that may be released are expected to have insignificant environmental impact.

SECTION 13: Disposal considerations

Dispose of contents/container in accordance with the local/regional/national/international regulations.

SECTION 14: Transport Information

Not hazardous for transportation.

SECTION 15: Regulatory information

15.1. Safety, health and environmental regulations/legislation specific for the substance or mixture
This product is an article and is exempted from Measures on Environmental Management of New Chemical Substances and from IECSC inventory listing requirements.

SECTION 16: Other information

References
United Nations 'Recommendations on the Transport of Dangerous Goods - Model Regulations '
United Nations 'Globally Harmonized System of Classification and Labelling of Chemicals (GHS)'.

Revision information:
Conversion to AIS.

DISCLAIMER: The information on this Article Information Sheet is based on our experience and is correct to the best of our knowledge at the date of publication, but we do not accept any liability for any loss, damage or injury resulting from its use (except as required by law). The information may not be valid for any use not referred to in this Information Sheet or use of the product in combination with other materials. For these reasons, it is important that customers carry out their own test to satisfy themselves as to the suitability of the product for their own intended applications.

3M People's Republic of China AISs are available at www.3m.com.cn

MATERIAL SAFETY DATA SHEET (MSDS)

Issued: Dec 20 , 2007
Revised: Dec 20 , 2007

File No. 2302

1. CHEMICAL PRODUCT & COMPANY IDENTIFICATION

CHEMICAL PRODUCT NAME :	DURANEX XFR4840
NAME OF COMPANY :	WinTech Polymer Ltd.
SECTION IN CHARGE :	Quality Assurance Dept.
ADDRESS :	2-18-1 Konan, Minato-ku, Tokyo,108-8280 Japan
TELEPHONE NUMBER :	03-6711-8605
FACSIMILE NUMBER :	03-6711-8616

2. COMPOSITION/INFORMATION ON INGREDIENTS

SUBSTANCE/PREPARATION	:	Preparation
COMMON CHEMICAL NAME	:	Polybutyleneterephthalate
SYNONYMS	:	Polybutyleneterephthalate(PBT)
INGREDIENTS AND COMPOSITION	:	PBT≧80%, Phosphorus Flame retardant and others ≦20%
CHEMICAL FORMURA	:	
SERIAL № IN OFFICIAL GAZETTE	:	7-1039（base resin） (Law Concerning Examination and Regulation of Manufacture,etc.,of Chemical Substances)
CAS №	:	２４９６８－１２－５（base resin）

3. HAZARDS IDENTIFICATION

PHYSICAL AND CHEMICAL HAZARDS	:	Not applicable
HUMAN HEALTH EFFECTS	:	Not applicable
ENVIRONMENTAL EFFECTS	:	Not applicable
PHYSICAL AND CHEMICAL HAZARDS	:	It is inflammable substance and combustible if an igniting source is existent. Neither dangerous reaction,fire nor explosion can be caused under normal conditions.
THE CLASSIFICATION	:	Not applicable

4. FIRST-AID MEASURES

INGESTION	:	Help to vomit as much as possible. If sick feeling continues,and ask a physician for advice.
INHALATION	:	When a gas generated from the molten polymer,especially fume generated during combustion or heat, has been inhaled,remove fresh air without delay and wait until the victim is recovered. If sick feeling continues,ask a physician for advice.
SKIN CONTACT	:	Cool the contacted skin with clean water without delay,if a contact with the polymer In a molten form. Do not force to remove the solid resin on the skin. If any burns are observed on the skin,ask a physician for advice.

EYE CONTACT	:	Cool and rinse the eye with clean water for at least 15 minutes when the eyes had contact with molten polymer. In case of wearing contact lenses,remove the lenses as soon as possible,and ask a physician for advice. When the eye had contact with the polymer in an ordinary solid form,rinse the eye with clean water without delay. If the discomfort persists,ask a physician for advice.

5. FIRE-FIGHTING MEASURES

EXTINGUISHING MEDIA	:	Water,form fire-extinguishing agent,powder fire-extinguishing agent,and carbon dioxide gas.
SPECIFIC METHODS	:	Extinguish the fire with water. A method of extinguishing an ordinary fire may be applied. Do not apply water directly to processing machines.
SPECIFIC HAZARDS	:	Incomplete combustion leads to generation of toxic gases such as carbon monoxide or tetrahydrofuran,in addition to carbonic acid gas and water.
SPECIAL EQUIPMENT FOR THE PROTECTION OF FIREFIGHTERS	:	In case the fire gained force,use a gas mask or other protective equipment.

6. ACCIDENTAL LEAKAGE MEASURES

PERSONAL PRECAUTIONS	:	When pellets were spilled on the road or floor,wipe them off with a besom or cleaner not to cause slipping.
ENVIRONMENTAL PRECAUSION	:	Handle the spillage in accordance with provisions given in the "Resin pellet spillage preventive manual",in order to prevent intakes by marine animals and birds.

7. HANDLING AND STORAGE

HANDLING	:	This resin in a pellet form will neither ignite nor explode at room temperatures.
HANDLING 2	:	For molding work,effective means for local exhaust are required to discharge gases generated by melt processing.
HANDLING 3	:	Avoid inhaling of gases generated in moulding work. Do not directly touch resin of high temperature.
HANDLING 4	:	Avoid retaining hot resin in the processing machines for many hours.
HANDLING 5	:	This pellets spilled on the floor are likely to cause slipping. Remove such spillage at any times.
STORAGE	:	Keep the substance away from any fire or heat sources for the sake of safe storage.
RECOMMENDED PACKAGING MATERIALS	:	No information.

8. EXPOSURE CONTROL / PERSONAL PROTECTION

CONTROL CONCENTRATION	:	None at present
PERMISSIBLE CONCENTRATION	:	OSHA PEL/1985 Max. permissible concentration of inactive powder 15mg/㎥ - ditto - (Aspiration) 5 mg/㎥ ACGIH TLV/1992 1993 Exposure limit of the powder TWA 10 mg/㎥
ENGINEERING MEASURE	:	When handling dust: Use totally enclosed containers resisting dust explosion. When heat melted in molding: Effective local ventilation must be provided.

PERSONAL PROTECTIVE EQUIPMENT	:	
RESPIRATORY PROTECTION	:	Wear a dust-proof mask.
EYE PROTECTION	:	Wear protective glases or goggles.
HAND PROTECTION	:	Wear heat-resisting gloves against burns, when handling molten polymer.
SKIN & BODY PROTECTION	:	Wear long sleeve clothes against burns, when handling molten polymer.

9. PHYSICAL AND CHEMICAL PROPERTIES

APPEARANCE etc.	:	Pellet
BOILING POINT	:	Not applicable
VAPOUR PRESSURE	:	Not applicable
VOLATILITY	:	Not applicable
SUBLIMATION	:	None
MELTING POINT	:	228℃
DENSITY	:	1.32g/㎤
SOLUBILITY	:	Insolube in water
FLASH POINT	:	300℃ or higher
IGNITION POINT	:	300℃ or higher
EXPLOSION PROPERTY	:	Not applicable
INFLAMMABILITY	:	None
REACTIVITY WITH WATER	:	None
OXIDIZABILITY	:	None
SELF-REACTIVITY	:	None
DUST EXPLOSIVENESS	:	Upper explosion limit : Not applicable. Lower explosion limit : 35g/㎥

10. STABILITY AND REACTIVITY

STABILITY AND REACTIVITY	:	Stable for nomal storage or handling.

11. TOXICOLOGICAL INFORMATION

SKIN CORROSIVE OROPERTIES	:	No finding.
SENSITIZING & IRRITANT EFFECTS	:	Gas generated in drying or melting is irritating eyes and skins.
ACUTE TOXICITY(INCLUDING LD50)	:	No finding.
SUBACUTE TOXICITY	:	No finding.
CHRONIC TOXICITY	:	No finding.

CARCINOGENECITY	:	No finding.
MUTAGENECITY(Micro organisms,chromosomal aberration)	:	No finding.
REPRODUCTIVE TOXICITY	:	No finding.
TERATOGENICITY	:	No finding.
OTHERS(Including generation of hazardous gases by reaction with water,for ezample)	:	No finding in this report means that there will be no hazard in general,but no proving data available at the time of reporting.
OTHER CAUTIONS	:	With regard to dust,the maximum permissible concentration and limits are fixed by OSHA and ACGIH.

12. ECOLOGICAL INFORMATION

BIODEGRADABILITY	:	No finding.
BIOACCUMULATION	:	No finding.
FISH TOXICITY	:	No finding.

13. DISPOSAL CONSIDERATION

WASTE FROM RESIDUES	:	This is designated as waste plastics among industrial wastes by the Wastes Disposal Law. Disposal waste pellets through licensed wastes handlers or local autonomous bodies if they are handling wastes disposal.
WASTE FROM RESIDUES 2	:	When disposed by incineration,use the well controlled incinerators in accordance with the Wastes Disposal Law,Air Pollution Control Law and Water Pollution Prevention Law.

14. TRANSPORT CONSIDERATION

UN CLASSIFICATION NUMBER	:	Not applicable
OTHER CAUSIONS	:	Handle with care so as not to give damages to containers or not to be subjected to wetting.
OTHER CAUSIONS 2	:	Secure the containers firmly so as not to cause collapsing.

15. REGULATORY INFORMATION

WASTE DISPOSAL LAW	:	Waste plastics among industrial wastes.

16. OTHER INFORMATION

HANDLING OF THE DETAILS GIVEN ABOVE	:	This MSDS is the English version translated from the Japanese MSDS which is prepared for domestic use. Details given above are based on references, information and data available at this moment, but no warranty can be made on exactness of these details. They are also prepared on the assumption that the product will be handled in a normal way. For special handling, adequate safety and environmental measures should be taken in respect to its applications. Our products are not specifically intended for implants for medical and dental applications, and therefore they are not recommended for such applications. "No finding" in this report means that there will be no hazard in general, but no proving data is available at the time of reporting.

To I-PEX Co.,Ltd

MATERIAL SAFETY DATA SHEET

MSDS FILE No. (KURAMI WORKS) : 05−1225 (based on Form OSHA-174)

IDENTITY (AS Used on Label and List)

Product Class : Phosphor Bronze Strip
Trade Name : JIS H3130 C5210R (Equivalent to ASTM B103 C52100)
CAS No. : Copper: 7440-50-8, Tin: 7440-31-5, Phosphor: 7723-14-0

Chemical Composition

	Content(wt-%)	CAS No.
Tin(Sn)	7. 0~9. 0	7440−31−5
Phosphor(P)	0. 03~0. 35	7723−14−0
Copper(Cu)	Balance	7440−50−8
Sn+P+Cu	99. 7≦	-

Section I

Manufacturer's Name
NIKKO METAL MANUFACTURING CO., LTD.
KURAMI WORKS

Address
3 Kurami Samukawa-cho
Kouza-gun Kanagawa prefecture
253-0101 JAPAN

Telephone Number for Information (Quality Assurance)
+81-467-75-7285

Facsimile Number for Information (Quality Assurance)
+81-467-74-6971

Date Prepared
May 24th, 2005

Signature of Person in Charge
Chihiro Izumi
IZUMI, Chihiro
Senior Technical Supervisor, Quality Assurance

Signature of Person Responsible
Hiroaki Watanabe
WATANABE, Hiroaki
Manager, Quality Assurance Section

Section II Hazardous Ingredients / Identity Information

Hazardous Components (Specific Chemical Identity : Names OSHA Pel ACGIH TLV

Nothing for ordinary service condition

Section III Physical / Chemical Characteristics

Boiling Point	2630 ℃ for Copper 2275 ℃ for Tin	Specific Gravity (H20 = 1)	8.80
Vapor Pressure (mmHg)	N/A	Melting Point	1025 deg. centi. for C5210 Phosphor Bronze
Vapor Density (Air = 1)	N/A	Evaporation Rate (Butyl Acetate = 1)	N/A

Solubility in Water
N/A

Appearance and Odor
Brown − Red (solid) : Odor − None

Section IV Fire and Explosion Hazard Data

Flash Point (Method Used)	Flammable Limits	LEL	UEL
N/A	N/A	N/A	N/A

Extinguishing Media
N/A (stable , nonflammable substance)

Special Fire Fighting Procedures
Not specified

Unusual Fire and Explosion Hazards
Metal products do not present fire or explosion hazards under normal conditions.

Section V Reactivity Data

Stability	Unstable		Conditions to Avoid
	Stable	×	

Incompatibility (Materials to Avoid)

Nothing

Hazardous Decomposition or Byproducts

Nothing

Hazardous Polymerization	May Occur		Conditions to Avoid
	Will Not Occur	×	

Section VI Health Hazard Data

Route(s) of Entry :	Inhalation ?	Skin ?	Ingestion ?
	N/A	N/A	N/A

Health Hazardous (Acute and Chronic)

N/A

Carcinogenicitry :	NTP ?	IARC Monographs ?	OSHA Regulated ?
	N/A	N/A	N/A

Signs and Symptoms of Exposure

N/A

Medical Conditions
Generally Aggravated by Exposure N/A

Emergency and First Aid Procedures

N/A

Section VII Precautions for State Handling and Use

Steps to Be Taken in Case Material Is Released or Spilled

N/A

Waste Disposal Method

Collect scrap for remelting.

Precautions to Be Taken in Handling and storing

For Handling

- Put safety gloves on to protect your hands from edges of coils which might cut your hands.
- Wear safety glasses when metal powders or chips are expected to be generated in the work.
- Put safety shoes on when handling heavy coils.

For Storing

- The environment of stocking area should be free from acid, alkali, chloride, sulfide and other corrosive chemicals to prevent from rusting or corrosion.

Other Precautions

No special requirements

Section VIII Control Measures

Respiratory Protection (Specify Type)

Wearing a mask be recommended in the work such as abrasion and buffing which generates metal powders or chips.

Ventilation	Local Exhaust	Special
	None	None
	Mechanical (General)	Other
	None	None

Protective Gloves

Put safety gloves on to protect your hands from edges of coils which might cut your hands.

Eye Protection

Wear safety glasses when metal powder is expected to be generated in the work.

Other Protective Clothing or Equipment

Put safety shoes on when handling heavy coils.

Work / Hygienic Practices

None

Influence to environments

Fish on toxicity : TLm 48 hr. on $CuSO_4$
Salmogairdeneri : 0.038 ~ 0.8 ppm
Oryzias Latipes : 2.1 ~ 24ppm

2005 . 2 .27

Material Safety Data Sheet

1. Manufacturer

- Company HARADA Metal Industry Co., Ltd.
- Address 10−18 Sasamekitamati, Toda, Saitama 335-0033, Japan

  TEL 048−422−1588

  FAX 048−449−6303
- Counter The domestic business department business primary and second section

  TEL 048−441−5115

  FAX 048−444−9104

  The domestic business department OSAKA service office

  TEL 06−531−8094

  FAX 06−531−8096

  The domestic business department NAGOYA service office

  TEL 052−821−9778

  FAX 052−822−7500

  The overseas business department export section

  TEL 048−441−5115

  FAX 048−444−9104
- Urgent place to contact

  The quality assurance department

  TEL 048−422−1588

  FAX 048−449−6303

2. Products

- Phosphor bronze plates and strips for springs
- Phosphor bronze plates and strips

3. Specification of the material

- The division of mixture or single product : Single product
- The chemical name : Copper alloy
- Chemical composition and content rate(wt.%)

Element	Percent					CAS No.
	C5210	C5212	C5191	C5102	C5111	
Copper	rem.	rem.	rem.	rem.	rem.	7440-50-8
Tin	7.0~9.0	7.0~9.0	5.5~7.0	4.5~5.5	3.5~4.5	7440-31-5
Phosphorus	0.03~0.35	0.03~0.35	0.03~0.35	0.03~0.35	0.03~0.35	7723-14-0
Lead	0.05 max	0.05 max	0.05 max	0.05 max	0.05 max	7439-92-1
Iron	0.1 max	0.1 max	0.1 max	0.1 max	0.1 max	7439-89-6
Zinc	0.2 max	0.2 max	0.2 max	0.2 max	0.2 max	7440-66-6

4. Classification of harmfulness

- The name of classification : Not classified into the dangerous harmfulness material.
- The danger : No knowledge
- The harmfulness : No knowledge
- The effect for the environment : No knowledge

5. First aid

- Eyes : Flush the water. Consult the doctor, when the simulation of the eye continues.
- Skin : Flush the water.
- Inhalation : Consult the doctor, when it was large inhaled.

6. The treatment in the fire

- Nonflammable.

7. Leakage

- Not applied (because of solid)

8. Attention in handling and storage

- Stored at the ordinary—temperature and usual humidity.
- Prohibition of the rapid temperature and humidity change.

9. Treatment on the exposure prevention

- Standard control concentration : Not regulated.
- Allowable temperature : Not regulated.
- Facility countermeasure : The whole ventilation is desirable.
- Protector : For lung ,the wear of protection mask is desirable for the power handling.
  For hand ,the wear of protective glove is desirable.
  For eyes ,the wear of safety goggles is desirable for the power handling.
  For body , the wear of protective clothing is desirable.

10. Physical and chemical characteristic

- Appearance and smell : The solid with the metallic luster. Odoless.
- Boiling point : The indistinctness.
- Solubility : Dissolves in the inorganic acid.

	C5210	C5212	C5191	C5102	C5111
Specific gravity	8.82	8.82	8.85	8.88	8.90
Melting point	1020℃	1020℃	1045℃	1050℃	1060℃

11. Information for danger

- Fire point : The indistinctness.
- Stability : Show the stability at room temperature and in the air.
- The situation to be avoided : —

12. Information for harmfulness

- The powder stimulates eyes , skin and bronchi.
- Produce the ulcer and the hepatic disorder rarely.

13. Information for environment

- No knowledge.

14. Attention for scrapping

- Possible to deal with ,as an industrial waste.

15. Attention for transportation

- No damage transportation is desirable.

16. Applying act

- —

4.MSDS

江阴凯博通信科技有限公司

JIANGYIN KAIBO COMMUNICATION TECHNOLOGY CO.,LTD.

Material Safety Data Sheet（物質安全資料表）

一、　物品与厂商资料

物品名称：同轴高频线

物品编号：KB113 系列

制造商或供货商名称、地址：江阴市凯博通信科技有限公司/江苏省江阴市澄江镇梅园大街 391 号

紧急联络电话/传真电话：0510-86070001/86070020

二、　成分辨识资料

纯物质：

中英文名称：聚全氟乙丙烯 FLUORINATED PROPYLENE ETHYLENE/镀银铜线 Cu-silver plated/镀锡线 TINNED COPPER

同义名称：FEP/SC/TX

危害物质成分(成分百分比)：无

危害物质：

危害物质	浓度或浓度范围（单位：ppm）	
铅及其化合物 Pb	≤90	
镉及其化合物 Cd	≤75	
汞及其化合物 Hg	≤1000	
六价铬及化合物	≤1000	
卤素	氯 Cl≤900	氯 Cl+溴 Br≤1500
	溴 Br≤900	
SVHC15 种物质	禁止使用	

三、危害辨识数据

最重要危害效应	健康危害效应：在 260℃ 以上,可能会有吸入分解气体的危险.一定要安装排气装置.
	环境影响：要按废弃物处理及清扫法律法规处理,绝对不可燃烧.
	物理性及化学性危害：物理化学性能及其稳定,不易降解,不得擅自填埋 .
	特殊危害：　无
主要症状：　对人的神经系统产生损害	
物品危害分类：大气和水源	

四、急救措施

不同暴露途径之急救方法：

· 吸入：到空气流通处换气.

· 皮肤接触：无

· 眼睛接触：无

· 食入：　不消化,排出.

最重要症状及危害效应：无
对急救人员之防护：对流换气
对医师之提示： 吸氧

五、灭火措施

适用灭火剂： 通用
灭火时可能遭遇之特殊危害： 避免分解气体吸入
特殊灭火程序：无
消防人员之特殊防护设备：防毒面罩

六、泄漏处理方法

个人应注意事项：粉状树脂
环境注意事项： 不可填埋
清理方法：要按废弃物处理及清扫法律法规处理，绝对不可燃烧.

七、安全处置与储存方法

处置：避免与高温和火源接触.
储存：通风干燥处.

八、暴露预防措施

工程控制：无
控制参数： · 八小时日时量平均容许浓度/短时间时量平均容许浓度/最高容许浓度： · 生物指标：
个人防护设备： · 呼吸防护：安装排气装置 · 手部防护：无 · 眼睛防护：无 · 皮肤及身体防护：无
卫生措施：应将衣服上附着的灰尘抖落，手脸洗净，不要让其附着于香烟上.

九、物理及化学性质

物质状态：固体	形状：透明颗粒
颜色：透明	气味： 无
pH 值： 7	沸点/沸点范围： /
分解温度： 360℃	闪火点： /
自燃温度： /	爆炸界限： /
蒸气压： /	蒸气密度： /
密度： 2.2	溶解度： /

十、安定性及反应性

安定性：很稳定
特殊状况下可能之危害反应：高温或燃烧分解气体对人体神经系统的损害.
应避免之状况：绝对不可燃烧.

应避免之物质：金属钠及其强酸的混合物 .
危害分解物： 气体及粉尘.

十一、毒性资料

急毒性：/
局部效应：/
致敏感性： /
慢毒性或长期毒性： /
特殊效应： /

十二、生态资料

可能之环境影响/环境流布：不降解,禁填埋

十三、废弃处置方法

废弃处置方法：按废弃物处理及清扫法律法规要求送专业资质处理公司处置.

十四、运送资料

国际运送规定：/
联合国编号： /
国内运送规定： 无
特殊运送方法及注意事项：无

十五、法规资料

适用法规：遵循欧盟 REACH 法规相关要求。

十六、其它数据

参考文献	杜邦产品说明/SONY 限用物资标准
制窗体位	名称：江阴凯博通信科技有限公司
	地址/电话：江阴市澄江街道梅园大街 391 号/0510-86070017
制 表 人	姓名(签章)：庄科洁
制表日期	2011/11/3