东莞市一佳电子通讯科技有限公司

Dongguan YiJia Electronics Communication Technology Co.,Ltd.

规 格 承 认 书

SPECIFICATION FOR APPROVAL

日 期 Date	2023/07/13
编 号 File No	23071305
版 本 Revision	1.0

客 户 CUSTOMER: 道通

客户料号 CUSTOMER NO: 501008010

品 名 PART NAME: vciWIFI _2主天线 Antenna

供方料号 SUPPLIER NO: YJI01.005.054.305A

送样日期Date: 送样数量Q“TY:

客户确认CUSTOMER APPROVED BY		
APPROVAL	CHIEF	SUPERVISOR

供方确认 SUPPLIER SIGNATURE		
APPROVAL	CHECK	DESIGN
ChenGuoqiang	XieLi	ChenXingyi

YJ-RD-F04-A

add：东莞市长安镇沙头合兴路149 号B 栋二楼 Tel:0769-85535057 Fax:0769-81664308

承认书项目表

NO.	内 容（Contents）	页 数（Number of Page）	页 码（Page Code）
1	承认书封面 （Spec Cover）	1	1
2	承认书项目表（Spec Item ）	1	2
3	工程成品图 （Drawing）	1	3
4	天线规格（Antenna Specification）	1	4
5	S参数测试 （S Parameter ）	1	5
6	无源测试 （Passive Test ）	3	6 ~ 8
7	天线装配图（Antenna Profile）	2	9 ~ 10
8	材质证明（ Material Certificate ）	43	11 ~ 53
9	RoHS报告（ RoHS Test Report ）	**	**
10	N/A	N/A	N/A
11	-	-	-
12	-	-	-
13	-	-	-

add：东莞市长安镇沙头合兴路149 号B 栋二楼 Tel:0769-85535057 Fax:0769-81664308

RoHS Compatible

CUSTOMER	
PART NO	

REV.	DESCRIPTION	DATE
A	首次发行	2022-02-24
B	修改线材颜色	2022-05-10

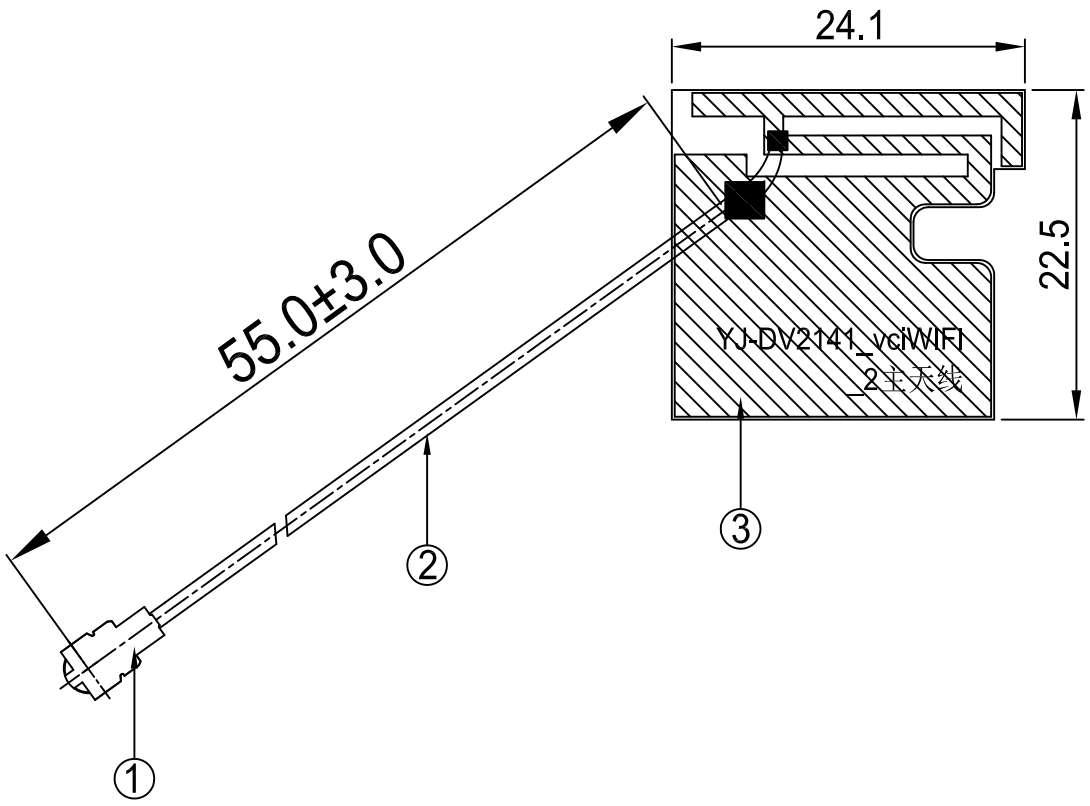

NO	PART NAME	DESCRIPTION	Material	Part Number	Q.TY
3	FPCB	24.1*22.5MM	FPCB	FPC1000XA.P01	1
2	Coaxial Cable	O.D.1.13 Gray	O.D.1.13	COA1000XA.P01	1
1	Mini Connector	Au Plated 1代	Cu	TER1000XA.P01	1

东莞市一佳电子通讯科技有限公司
Dongguan YiJia Electronics Communication Technology Co.,Ltd.
Tel :0769-82586086
Fax:0769-82586086

PART NAME: vciWIFI _2主天线 Antenna

PART NO.: YJI01.005.054.305A

DATE: 2022-05-10

APPROVED BY	CHECKED BY	DESIGNED BY	
殷涛	陈松华	吕森桦	UNITS: mm SCALE: 1/1 REVISION: A

Tolerance
X.X ±0.50
X.XX±0.15
X° ±3°

天线规格
Antenna Specification

Electrical Properties	
Frequency	2.4-2.5GHz 5.15-5.85GHz
Impedance	50 Ohm Nominal
V.S.W.R	2.0 Max
Gain	2.3 dBi@2.4-2.5GHz 3.5 dBi@5.15-5.85GHz
Radiation	Omni-directional
Polarization	Linear
Physical Properties	
Connector	1代IPEX
Cable Type	O.D.1.13mm
Cable Length	55mm
Cable Color	Gray
Operating Temp.	-40 ~ +85 ˚C
Storage Temp / Humidity	25±5˚C / <70%

add：东莞市长安镇沙头合兴路149 号B 栋二楼 Tel:0769-85535057 Fax:0769-81664308

Agilent E5071B	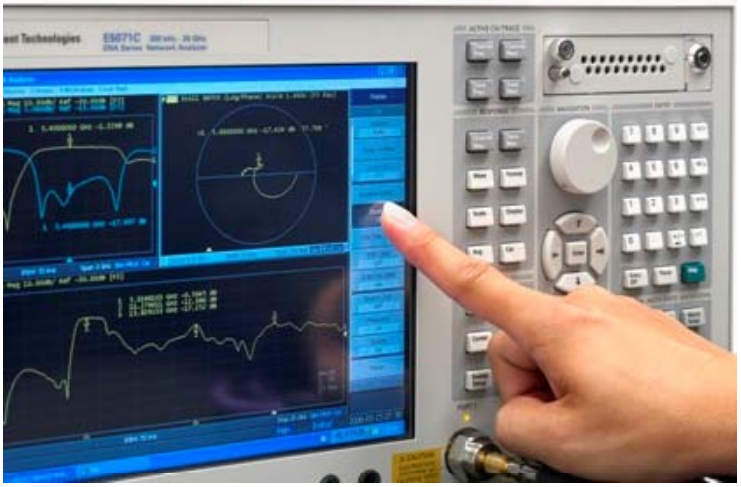
S Parameter Test // WiFi #4	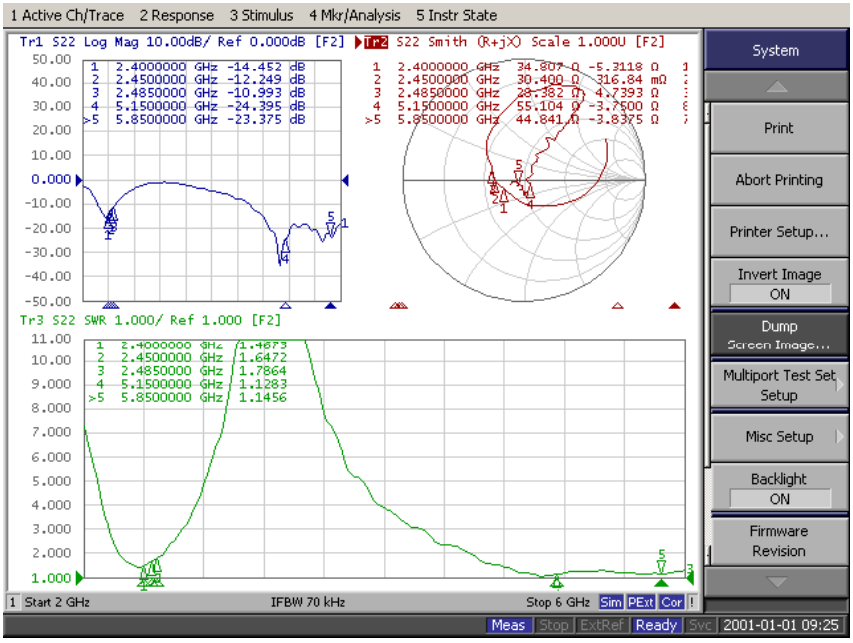

add：东莞市长安镇沙头合兴路149 号B 栋二楼 Tel:0769-85535057 Fax:0769-81664308

Antenna Passive Test

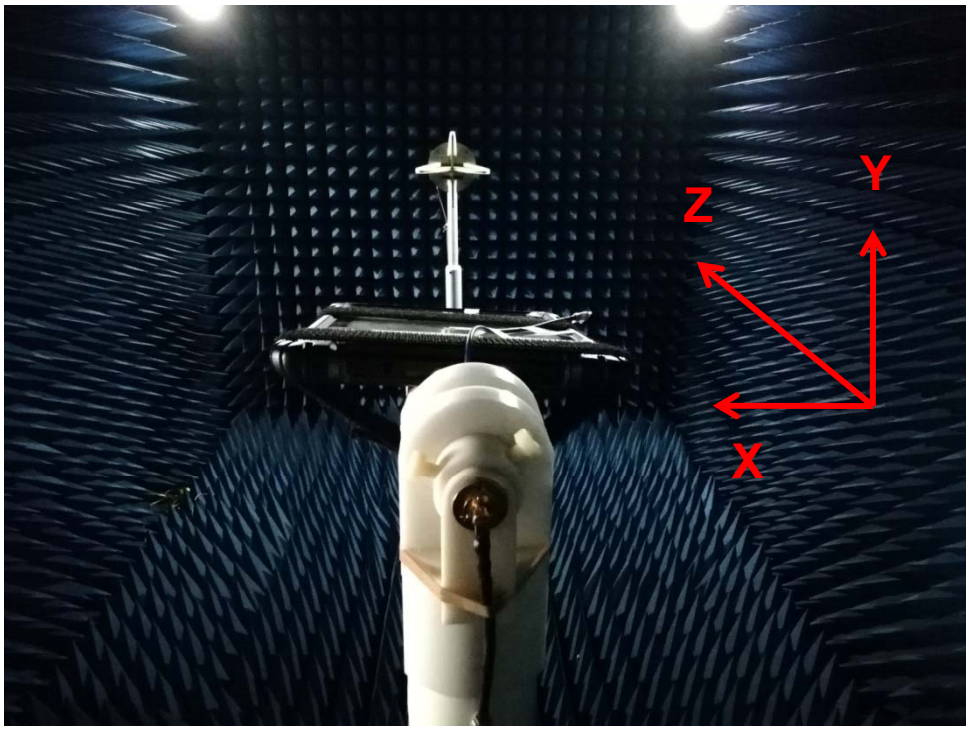

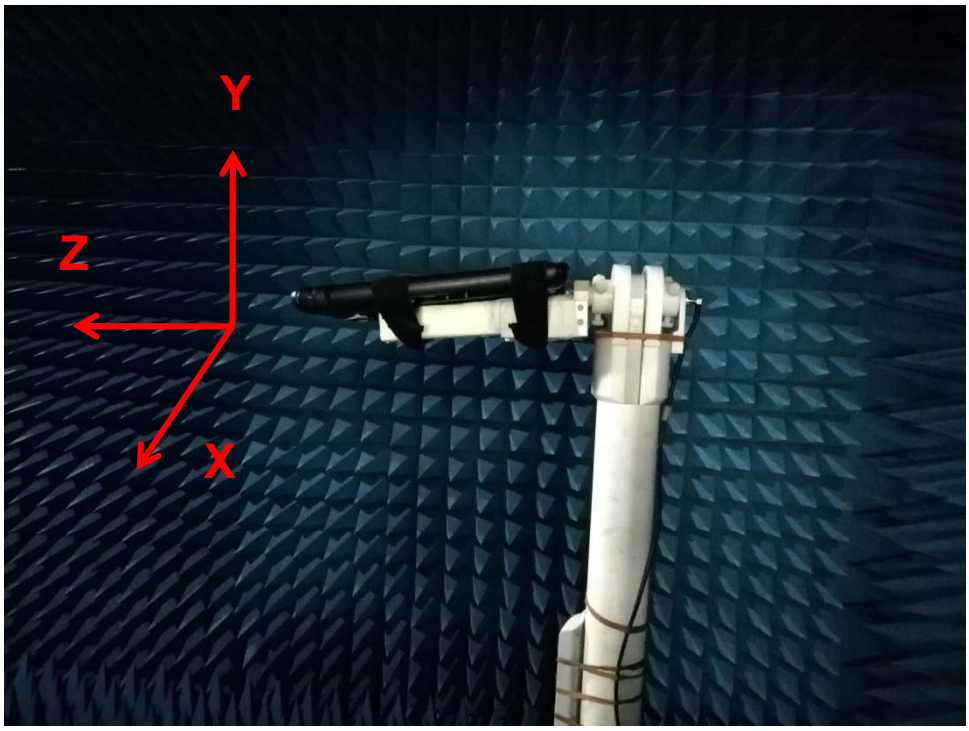

add：东莞市长安镇沙头合兴路149 号B 栋二楼 Tel:0769-85535057 Fax:0769-81664308

Passive Test For WiFi2.4G #4			
Freq (MHz)	Effi (%)	Effi (dB)	Gain (dBi)
2400	54.8	-2.6	2.3
2410	55.9	-2.5	2.2
2420	56.6	-2.5	2.1
2430	57.5	-2.4	2.3
2440	58.5	-2.3	2.2
2450	58.7	-2.3	2.2
2460	55.4	-2.6	1.8
2470	52.3	-2.8	1.6
2480	50.6	-3.0	1.3
2490	48.7	-3.1	1.2
2500	46.2	-3.4	1.1

Passive Test For WiFi5.8G #4			
Freq (MHz)	Effi (%)	Effi (dB)	Gain (dBi)
5150	53.1	-2.7	2.1
5200	56.3	-2.5	2.4
5250	54.1	-2.7	2.5
5300	50.0	-3.0	2.7
5350	51.4	-2.9	2.9
5400	56.2	-2.5	3.2
5450	53.7	-2.7	3.3
5500	48.7	-3.1	3.2
5550	54.6	-2.6	3.4
5600	56.6	-2.5	3.5
5650	50.7	-2.9	3.3
5700	48.1	-3.2	3.3
5750	44.7	-3.5	3.0
5800	55.8	-2.5	3.3
5850	55.4	-2.6	3.5

add：东莞市长安镇沙头合兴路149 号B 栋二楼 Tel:0769-85535057 Fax:0769-81664308

Device	

add：东莞市长安镇沙头合兴路149 号B 栋二楼 Tel:0769-85535057 Fax:0769-81664308

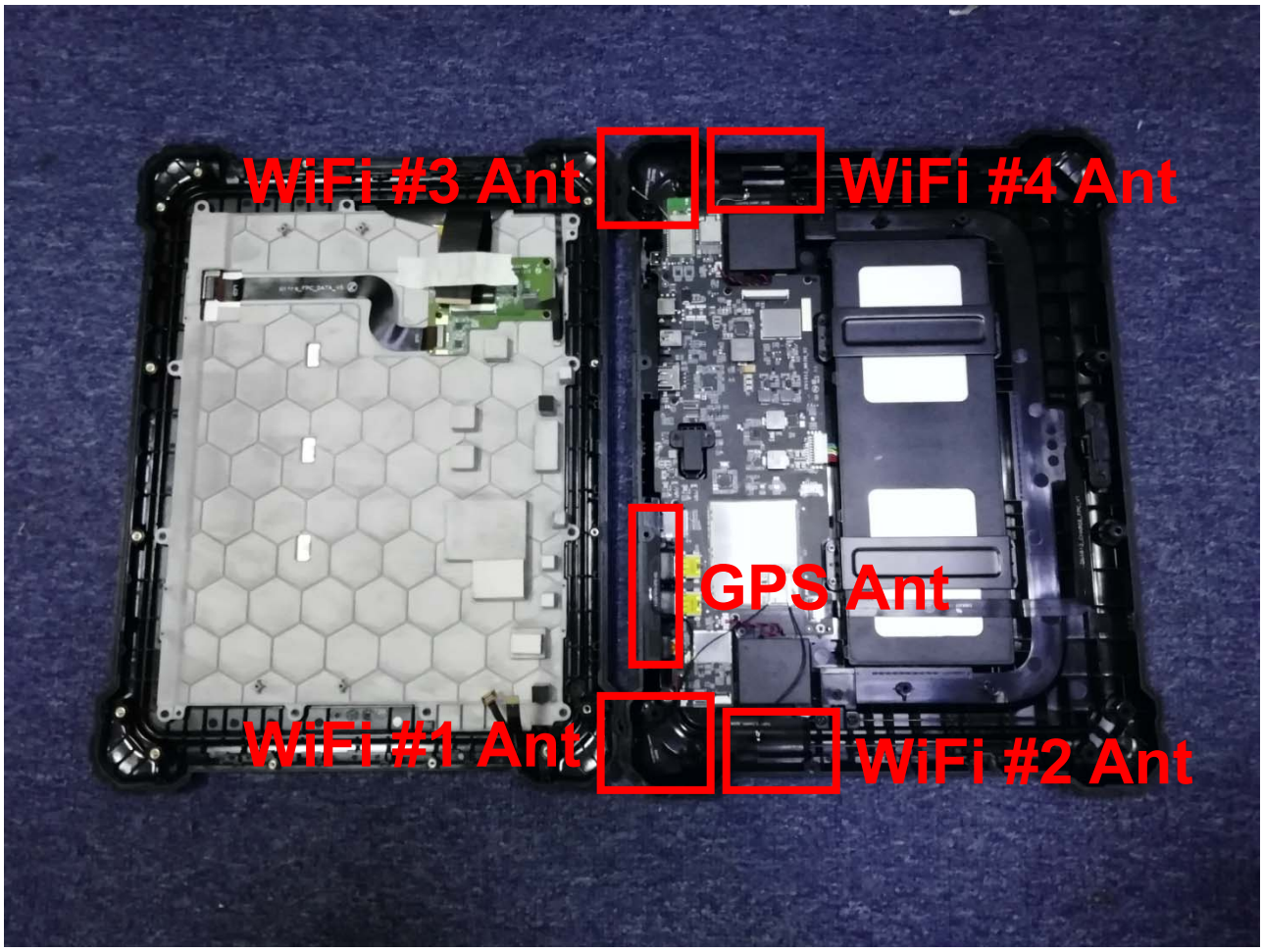

add：东莞市长安镇沙头合兴路149 号B 栋二楼 Tel:0769-85535057 Fax:0769-81664308

， 安 全 資 料 表

版權 2021-01-10

First, chemical products and materials for business

Chemical name: PSM-800FSDM-A/SMH-800 liquid solid plate ink
Other names:
Use and restricted use of construction: flexible printed circuit board (PI/Cu), hand machine roof board
Name, address and address of the creator, entrant or supplier: Creator: Yueli Reachability Co., Ltd. Address: No.22 Jingjian Fourth Road, Guanyin District, Taoyuan City: 886-3-4836651
Urgent/true: 886-3-4836651, true: 886-3-4837487

Second, the hazard identification of resources and materials

Hazard classification of chemical products:
Health and environmental hazards: Acute toxicity (swallowing) 4, rot/skin irritation 2, heavy weight/eye irritation 2, skin Pass sensitive substance first, carcinogenic substance second, and hazardous substance second (acute toxicity).
Indication of content: Symbol number: Warning language: Warning hazard warning interest: Harmful to swallow Cause skin irritation Causing severe eye irritation may cause skin hypersensitivity and suspected carcinogenesis Toxic to aquatic organisms Hazard prevention measures: Put the container in a place with good ventilation far away from the high temperature Do not eat or drink when using Remove the blindfold/face mask immediately when your clothes are contaminated If you touch your eyes, wash them with plenty of water immediately, and then ask the mud to wear suitable gloves Do not inhale gas/gas/steam gas/gas before use Place it in the upper lock Do not place until you know all safety precautions Avoid releasing release in the environment
Other hazards:-

III. Composition identification of PSM-800FSDM-A/SMH-800

capital mixture:

Liquid solid plate ink PSM-800FSDM-A/SMH-800		
Chemical geology:		
Chinese and English names of hazardous components	Register number of Chemical Digest Service (CAS No.)	Degree or degree (percentage of components)
Oxygen acrylate oligmer Epoxy acrylate oligmer	28064-14-4	50%
Silicon dioxide Fused silica	7631-86-9	13%
Aromatic solution	64742-94-5	4%

Methyl dipropylene glycol	34590-94-8	4%
Carbon black	1333-86-4	3.5%
BaSO4 sulfate	13462-86-7	24%
Photoinitiator and the others	5495-84-1	1.5%

Fourth, first aid measures

First aid methods for the same road:

Inhalation: 1. Take self-protection measures before rescue.

2. Remove pollution sources or move patients to new places.

3. If a patient stops breathing, artificial respiration should be given immediately by the person who has been adalmed. If the heart stops, cardiopulmonary resuscitation should be given. When the patient inhales and swallows toxic substances, mouth-to-mouth artificial respiration should be used directly, and pocket masks and other medical equipment should be used for artificial respiration.

4. Maintain the patient's safety and normal temperature. 6. Treat the cure quickly.

Pi Mo: Wash the contaminated area with harmonious water for at least 20 minutes, and remove contaminated clothes, shoes and leather products before water. Eye touching: Immediately open the eyelids and wash the contaminated eyes with water for at least 20 minutes, and immediately take care of them.

Intake: 1. If the patient will be frustrated, or has been frustrated, he can feed anything.

2. It can induce vomiting and give 240-300ml of water.

3. If you vomit spontaneously, rinse your mouth and supply water repeatedly.

The most important diseases and harmful effects:-

Protection against first aid workers:-

Tips for doctors:-

V. Fire measures

Suitable for fire: chemical dry powder, wine foam, carbon dioxide, water, fire: water, water, foam water.

Special hazards that may be encountered during fire;

1. Its steam gas and decomposition products are burning and toxic.
2. Its steam gas is heavier than its empty gas, and it can spread to distant fire sources and give birth to tempering.
3. The combination of steam and big gas may lead to explosion.
4. When this object is indoors, outdoors or in sewers, it is in danger of steam explosion.

Special Fire Procedure:

1. In a safe distance from the place of fire, keep in the upwind position.
2. You can use water containers to disperse steam gas to wash the leakage and sparse the leakage, so as to protect the rescue staff.
3. Water in the flame of the container around, so that the container is cold, until the fire is cold. Keep the bottom of the container safe.
4. Poker or move all ignition sources.

Special protection of firefighters: Firefighters must wear air respirators, fire clothing and protection gloves.

VI. Leakage and management methods

Things people should pay attention to:

1. Restrict personnel from entering until the spillover area is completely cleaned up.
2. The work of cleaning up by the person who is negated.
3. Wear appropriate civil air defense.

Attention to matters in the environment:

1. Remove the ignition source.
2. Maintain ventilation in the leakage area.
3. Be in the upper wind and avoid going into the lower place.
4. Remove or separate burning and combustible materials under conditions that endanger the safety of people.
5. At least 100 to 200 meters away from the pollution source.

Cleaning method:

1. You can touch the leaked materials.

2. Avoid leakage entering sewers or dense spaces.
3. Where safety permits, prevent or reduce spills.
4. Block the leakage with soil, sand or similar and combustible objects that will respond to the leakage.
5. When there is a small amount of spill, it should be absorbed by the reaction with the leakage. Contaminated absorbed and discharged materials have the same model
6. Harmfulness must be placed in the appropriate container that is covered and indicated. Wash the spill area with water.
7. When there is a large amount of spill: fire fighting, emergency management and business response to seek help.

VII. Safe Location and Storage Methods

Place:
1. It is stored in a place where it is dry and ventilated, and avoids direct light and ignition source.
2. Far away things such as strong oxides, strong acids and water.
3. Use grounding, use the device without spark, and ventilate the wind system.
4. Store a small amount in the refrigerator, and use the explosion-proof refrigerator.
5. Department of police reports leaked outside the city.
6. It is necessary to separate the storage area from the work area, restrict people from entering and leaving the storage area, and show warnings.
7. Avoid collision, and the nearest fire system.
8. You can work alone, and another person needs to be on standby for rescue.
9. In the work area, use the containers that can be used to burn the liquid body, and all the barrels and slots should be grounded, and the containers must be connected to each other.
10. Use the smallest possible amount, and use a suitable ventilation system in the designated area.
11. The target indication container should be covered when in use.

Storage:
1. It is stored in a place where it is dry and ventilated, and avoids direct light and ignition source.
2. Store a small amount in the refrigerator, and use the explosion-proof refrigerator.
3. It is necessary to separate the storage area from the work area, restrict people from entering and leaving the storage area, and show warnings.
4. The target indication container should be covered when in use.

Eight, the preventive measures

Engineering control:
1. The wind system of the single use of the step to generate sparks and grounding.
2. The discharge port leads directly to the outside, and the important measures for protection are taken.
3. When using this object in large quantities, it may be necessary to install local gas and process dense.
4. Supply fully new and fresh air gas to supplement the air gas drawn out by filling and discharging the air gas system.

Control number:-
Average capacitance of eight small hours/average capacitance of short hours/maximum capacitance:-
Biological fingerprint:-

Civil air defense:

:: Breathing protection: 1. Chemical materials containing machine vapor poison cans or self-made breathing protection equipment.

2. Constant quantity type gas supply type breathing protection device, animation type breathing protection device containing machine steamed gas pot, mask containing machine steamed gas pot, comprehensive self-galvanizing breathing protection device, comprehensive gas supply type breathing protection device, and comprehensive chemical school poison breathing protection device containing machine steam poison pot. 3. Positive full-blown breathing protection equipment or positive full-blown gas-supplied breathing protection equipment with auxiliary positive self-blown breathing protection equipment.

4. There is a mask for steaming gas canister, and an escape type self-breathing protection tool.

Hand protection: Butyl rubber is the best, chlorinated polyethylene, polyvinyl acid, fluorinated cortex, butyl rubber/chloroprene rubber, fluorinated rubber, chloroprene rubber/natural rubber galaxy cover, fluorinated cortex/chloroprene rubber are also good anti-scorching gloves.

Eye protection: 1. Anti-chemical safety eye protection.

2. Full cover.

3. Don't wear shaped eyes.

1. Work shoes and body clothes.

2. There should be a bath/wash in the work area.

The measures for living:

1. Remove contaminated clothes quickly after work, and then wear them after washing them.

2. The work place is forbidden to smoke cigarettes or eat. 3. After taking care of this thing, you must wash your hands. 4. Keep the property clean.

IX. Physical and Chemical Geology

Outside (physical state, color, etc.): black cream	Gas flavor: bad smell
Olfactory value:-	Melting level:-25 ℃
PH value:-	Boiling/boiling: 218-219 ℃
Combustibility (solid and gas):-	Fire: > 75 ℃
Decomposition temperature:-	The method of wearing a cup: () carrying a cup (V) wearing a cup
Spontaneous combustion temperature: spontaneous combustion	Explosion boundary:-
Steaming gas:-	Steaming density: 6.07
Density: 1.24 ~ 1.26 (water = 1)	Solubility: Slightly soluble in water
Octanol/water partition number (log Kow):-	Dispersion rate:-

X. Stability and Reaction

Stability: Stability under sealed dry container.
Possible hazard response under special conditions:-
Types to be avoided: leakage, flame and other ignition sources.
Things to avoid: acid, oxidation
Hazardous decomposition: carbon monoxide

XI. Toxic Materials

The road: leather, inhalation, eyes, food
Symptoms: irritation, drowsiness, dizziness, tiredness, pain, nausea, difficulty breathing and
Acute toxicity: Inhalation: 1. Steaming gas will irritate nose, throat and lungs. Pi Fou: 1. Liquid body or solution will cause heavy irritation and burning pain. 2. Steaming gas can cause irritation. 3. After being picked up by the skin, the liquid will be absorbed to the poisoned amount. Eyes: 1. Steaming gas will irritate eyes and stimulate them. 2. Liquid body will cause heavy burning and injury to eyes. Intake: 1. It will cause bright local irritation to the mouth and digestive tract.
Chronic toxicity or long-term toxicity:-

Twelve, raw materials

Raw toxicity:-
Persistence and degradation: Avoid entering the water source inlet and waterway, which is harmful to aquatic organisms.
Bioaccumulability:-
Reactionality in soil:-
Other good effects:-

XIII. Methods of abandoning and abandoning places

Discarding method: 1. Examining the principle of phase method. 2. According to the pieces of the store to be disposed of waste materials. 3. Specific incineration or burial can be used.

Fourteen, Dictate to send materials

Lian He Guo Bian No.:-

版權 2021-01-10

The name of the joint country is:-
Classification of the hazards of Dirk: It is judged as ordinary goods according to Fujian Commercial Report 0128227
Packaging and fitting: It can be arranged according to ordinary goods
Marine pollutants (yes/no): no
Special delivery methods and precautions:-

XV. French Materials

Suitable usage: 1. If you work safely, you will be able to apply it 2. Road traffic safety rules 3. Methods and standards for the storage and removal of waste materials 4. Harmful academic products and general knowledge 5. What you can do in your work, what you can do, and what you can do

XVI. Other materials

Take part in the text	1. RTECS Materials, TOMES PLUS CD-ROM, Vol. 41, 1999 2. HSDB Materials, TOMES PLUS CD-ROM, Vol. 41, 1999	
Superficial site	Mingjia: Youli Lian Lian Co., Ltd.	
	Address/: No.22, Jingjian Fourth Road, Guanyin District, Taoyuan City: 886-3-4836651	
Table person	Calling for: the principle of science and technology	Name (Seal): Huang Zhihui
Table date	2021.01 1.10	
Per	Among the above-mentioned materials, "-" means that there is no related materials at present, while the symbol number "/" means that this person is compatible with the material and is suitable for use	

The above-mentioned materials are provided by our company, which is correct for the above-mentioned materials, but it is still difficult to avoid them. The materials and materials of each project are only for reference, and users should judge their availability according to their corresponding needs.

JIU JIANG
Flex Co., Ltd
1210 Qianjin Road(E), Jiujiang Jiangxi,China 332006
Tel: 86-792-8358899, Fax: 86-792-8355803

MATERIAL SAFETY DATA SHEET

SECTION 1 PRODUCT AND COMPANY IDENTIFICATION

1.1 Material Name: Flexible Copper-Clad Polyimide Laminates
1.2 Part Number: LPI-HF
1.3 Use of Material: Printed Circuit Boards
1.4 Date of Prepared: April 22nd, 2021
1.5 Company Identification: Jiu Jiang Flex Co., Ltd.
1210Qianjin Road (E) Jiujiang, Jiangxi, China 332006
1.6 Emergency Telephone Number: 86-792-8358899
1.7 Telephone Number for Information: 86-792-8358899, 8355813

SECTION 2 COMPOSITION/INFORMATION ON INGREDIENTS

Composition / substance		CAS#	%
PI	polyimide	25038-81-7	2.93~28.11
Adhesive	Epoxy resin	25036-25-3	2.42~6.81
	Flame Retardant (additive type)	225789-38-8	0.49~1.36
	Rubber	9003-18-3	1.45~3.99
Copper foil	Copper	7440-50-8	92.66~59.72

SECTION 3 HAZARDOUS IDENTIFICATION

Dust, soot, combustion gases produced when burning, of inhaled, ingested or absorbed through skin it will be harmful or irritating to the eyes, skin, mucous membrane, respiratory system, allergies can be caused to skin, flammable irritating and sensitive.

SECTION 4 FIRST-AID MEASURES (on Dust)

Inhalation:
Remove to fresh air. Obtain medical attention if symptoms persist.

Eye Contact:
Flush immediately with large amounts of water. Do not rub eyes. Obtain medical attention if symptoms persist.

Skin Contact:
Wash area of contact thoroughly with soap and water. Do not rub or scratch. Obtain medical attention if symptoms persist.

Ingestion: Drinking water as much as possible, emetic, and see doctor.

1210 Qianjin Road(E), Jiujiang Jiangxi,China 332006
Tel: 86-792-8358899, Fax: 86-792-8355803

SECTION 5 FIRE FIGHTING MEASURES

Extinguishing Agents

Following extinguishing media can be used:
Carbon dioxide extinguisher
Dry powder fire extinguisher
Water Pump
Foam fire extinguisher

Hazards of Unusual burning and Explosion:

The material produces carbon monoxide, carbon dioxide, nitrogen, oxides of nitrogen, smoke and dust when extremely high temperature or burning.

Personal Protective Equipment

As in any burning, wear self-contained breathing apparatus and full protective gear.

Upper limit of Flammability: not ascertained

SECTION 6 EMERGENCY HANDLING OF LEAKAGE

Emergency handling:

Block the leakage area to avoid dust flying and wear protective equipment, use vacuum cleaner to clean the leakage.

SECTION 7 HANDLING AND STORAGE

Handling: Wear cotton gloves to protect product damage and hand lacerated.

Storage conditions

The material should be stored in dry, ambient temperature wrapped with PE film.

Environment: Keep away from heat, ignition sources, and direct sunlight.

Other conditions: Keep cartons tightly closed when not in use.

SECTION 8 EXPOSURE CONTROLS / PERSONAL PROTECTION

Respiratory protection:

No general requirements. If the occurrence of dust, gas or smoke processing or processing, is stimulating to employees, to use NIOSH/MSHA approved respiratory protection measures. Engineering control should be excluded from the need for respiratory support.

Ventilation:

Once air exhaust exposure exceeds limits, or visible smoke, dust, exhaust gas, the ventilation at site should be accompanied by all the heat process at the same time.

Mechanical operations:

Optimize and follow good industrial operation as possible as you can.

Eye Contact:

With eye-glasses on during all process

SECTION 9 PHYSICAL AND CHEMICAL PROPERTIES

Appearance	PI film Copper-Clad Laminate with adhesive
Physical State:	solid
PH:	Not Applicable
Melting point:	no data
Relative density (water =1):	more than 1
Boiling point:	no data
The relative vapor density (air =1):	more than 1
Saturated vapor pressure (kPa):	Not Applicable
Heat of combustion (kJ/mol):	no data
The critical temperature (c):	Not Applicable
The critical pressure (MPa):	Not Applicable
The octanol / water partition coefficient of numerical:	Not Applicable
Flash point（℃):	Not Applicable
Upper explosive limit% (V/V):	Not Applicable
Ignition temperature (c):	no data
The lower limit of explosion% (V/V):	Not Applicable
Solubility:	insoluble
Application:	used for making printed circuit board

SECTION 10 STABILITY AND REACTIVITY

Stability:

Storage for one year at 5℃ to 30℃ and RH less than 75%

Conditions to Avoid:

High Humidity, direct sunlight,

The copper side may have violent reaction with followings:

Acetylene, ammonium nitrate, bromide, chlorate, iodic acid, chlorine, ClF_3, $Pb(N_3)_2$, (Cl_2+OF_2), ethylene oxide, fluoride, hydrogen peroxide, nitric acid hydrazide, hydrazoic acid, H_2S, K_2O_2, NaN_3, Na_2O_2.

SECTION 11 TOXICOLOGICAL INFORMATION

Sensitization: Long time skin contact may cause dermatitis

Acute Poisoning: Inhalation of dust may cause thirst, fever, headache, weakness, symptom of respiratory disorders.

1210 Qianjin Road(E), Jiujiang Jiangxi,China 332006
Tel: 86-792-8358899, Fax: 86-792-8355803

SECTION 12 ECOLOGICAL INFORMATION

Normal condition: No big influence may caused to ecology.
Waste Disposal Method
To dispose based on local, state or national laws.
Tank treatment: Not applicable.

SECTION 13 DISPOSAL CONSIDERATION

Hazardous wastage: NO.
Waste Disposal Method
To bury or burn at specified place based on national laws.

SECTION 14 TRANSPORTATION INFORMATION

No special regulation on this product for domestic or international transportation.

SECTION 15 REGULATORY INFORMATION

Must be complied with domestic or local regulation

SECTION 16 REGULATORY INFORMATION

14.1 INTERNATIONAL REGULATIONS:
EU Directive 2011/65/EU (RoHS): Compliant

SECTION 17 OTHER INFORMATION

Issued by: QC Department of Jiu Jiang Flex Co., Ltd
Disclaimer:
The data sheet information is true and accurate, but all statements and recommendations do not contain any guarantee. The consequence of the material shall be from practice. This report does not include all the circumstances that the user may encounter during operation. Each aspect of the operation may be increased or decreased during operation. All health and safety information contained in this report shall be submitted to you employees and customers. Users are responsible to take appropriate measures in practical operations.

CHUNG YU INDUSTRY CORPORATION

Material Safety Data Sheet

Section 1： Chemical Product and Company Identification

Product name	Thermal curable two-component marking ink
Other means of identification	ZSR-150 ZM-400WF
Recommended use of the chemical and restrictions on use	Use in PCB fabrication.
Manufacturer/Supplier identification	CHUNG YU INDUSTRY COPORATION
Manufacturer/Supplier address	618 Yen-Ping Rd., sec. 3, Ping-Jeng, Tao-Yuan, Taiwan
Emergency telephone No.	(886-3)4641205
FAX No.	(886-3)4644839

Section 2： Hazards Identification Information

Hazard classifications of the product	Inflammable liquids(II),Carcinogens, (II), Inhalation of hazardous substances (I)
Label elements	 Hazard symbols: Fire Caution catchwords: Danger Hazard massages: Inflammable liquids and vapor Harmful to swallow Skin irritation Eye irritation
Other hazards	—

Section 3： Composition, Information on Ingredients

Mixture：

Chemical name	Concentration(% of contents)	CAS. NO.
Epoxy resin	50	25085-99-8
Barium sulfate	15	7727-43-7
Titanium dioxide	30	13463-67-7
Naphtha	5	8030-30-6

Section 4 ： First-aid Measures

The first-aid measures for different exposure routes:	
Eyes contact	Immediately flush eyes with plenty of water for at least 15 minutes, occasionally lifting the upper and lower eyelids.
Skin contact	Flush skin with plenty of soap and water for at least 15 minutes while removing contaminated clothing and shoes.
Swallow	Do not induce vomiting. If conscious and alert, rinse mouth and drink 2-4 cupfuls of milk or water.
Inhalation	Remove from exposure to fresh air immediately.
The most important symptoms and hazardous effects	Headache, nausea
Notes to Physicians	Please provide the MSDS for physicians.

Section 5： Fire-fighting Measures

Suitable fire extinguishing media	Chemical dry powders, chemical foam, carbon dioxide
General information	As in any fire, wear a self-contained breathing apparatus in pressure-demand, MSHA/NIOSH (approved or equivalent), and full protective gear. During a fire, irritating and highly toxic gases may be generated by thermal decomposition or combustion.
Specific fire-fighting methods	It’s not suitable to use water extinguish.

Section 6： Accidental Release Measures

Person-related precautionary measures	Do not inhale vapors / aerosols. Ensure supply of fresh air in enclosed rooms.
Environmental-protection measures	Do not allow to enter sewerage system.
Procedures for cleaning / absorption	Take up with liquid-absorbent material. Forward for disposal. Clean up affected area

Section 7： Safe Handling and Storage Measures

Handling	Wash thoroughly after handling. Remove contaminated clothing and wash before reuse. Avoid contact with eyes, skin, and clothing. Avoid ingestion and inhalation.
Storage	Store in a cool(15～25℃), dry place. Keep container closed when not in use.

Section 8： Exposure Controls Measures

Engineering controls	Use adequate general or local exhaust ventilation to keep airborne concentrations below the permissible exposure limits. Use process enclosure, local exhaust ventilation, or other engineering controls to control airborne levels.
Control parameters	

Term	8 hours time weighted averagw exposure limits TWA	Short-term exposure limits STEL	Maximum limits CEILING	Biological standards BEIs
Solvent	100ppm	125ppm	—	—

Personal protective equipment	Eye protection: Wear safety glasses and chemical goggles if splashing is possible. Skin protection: Wear appropriate protective gloves and clothing to prevent skin exposure. Clothing: Wear appropriate protective clothing to minimize contact with skin. Respirators: Wear a NIOSH/MSHA or European Standard EN 149 approved full-facepiece airline respirator in the positive pressure mode with emergency escape provisions.

Section 9： Physical and Chemical Properties

Physical state：paste	Color：white
Odor threshold：—	Odor：slightly pungent
pH value：—	Melting point：—
Decomposition temperature：—	Boiling point：110-190℃ (solvent)
Flammability(solid, gas)：—	Flash point：38-43℃ (solvent) Test methods：—
Autoignition temperature：—	
Vapor pressure：<5 mmHg @ 25℃ (solvent)	Explosion limits：—
Specific gravity/Density：1.45～1.55 g/cm^3 (water=1)	Solubility in water：insoluble

Section 10： Stability and Reactivity

Chemical stability	Stable under normal temperatures and pressures.
Conditions to avoid	Fire.
Incompatibilities with other materials	Strong oxidants.
Hazardous decomposition products	Irritating and toxic fumes and gases.
Hazardous polymerization	Has not been reported.

Section 11： Toxicological Information

Information on the likely routes of exposure	Skins, swallow, inhale, eyes
Symptoms	Nausea, vertigo, irritation
Acute toxicity	Skins: Slight irritation Swallow: Nausea, vomit, and the other symptoms same as inhale Inhale: Cause the respiratory tract irritation, nausea, vomit, headache Eyes: The vapor cause eyes irritation LD50(solvent): >5000mg/kg (mouse, swallow) LC50:－
Further information	Further hazardous properties cannot be excluded. The product should be handled with the usual when dealing with chemicals

Section 12： Ecological Information

Ecotoxic effect	Quantitative data on the ecologic effect of this product are not available.
Further ecologic data	No ecological problems are to be expected when the product is handled and due care and attention.

Section 13 - Disposal Considerations

Dispose of in a manner consistent with federal, state, and local regulations.

Section 14 - Transport Information

1. United Nation number (UN No.): 1866
2. UN proper shipping name: －
3. Transport hazard classes: 3
4. Packing group:－
5. Marine pollutant (Yes/No): No
6. Specific transport measures and precautionary conditions: －

Section 15 - Regulatory Information

1. European / International Regulations：European labeling in accordance with EC Directives.
2. Other using condition should follow local regulations.

Section 16 - Additional Information

Organization that prepared the MSDS	Name: R&D	TEL: (886-3)4641205	
	Address: 618 Yen-Ping Rd., sec. 3, Ping-Jeng, Tao-Yuan, Taiwan		
Person who prepared the MSDS	Job: manager	Name: Wan-Hua Lee	
Date the MSDS was prepared	2018/12/20		

The information above is believed to be accurate and represents the best information currently available to us. However, we make no warranty of merchantability or any other warranty, express or implied, with respect to such information, and we assume no liability resulting from its use. Users should make their own investigations to determine the suitability of the information for their particular purposes. In no way shall the company be liable for any claims, losses, or damages of any third party or for lost profits or any special, indirect, incidental, consequential or exemplary damages, howsoever arising, even if the company has been advised of the possibility of such damages.

物质安全资料（MSDS）
Material safety data

一.物品与厂商资料（Article and manufacturer information）

物品名称：铜面防氧化剂 OSP （Article name: copper surface antioxidant OSP）
物品编号 serial number：KBX-108H
联系电话 Contact number：0755-27232150
传　　真 Fax：0755-29083002

二.成份辨识资料（Component identification data）

化学性质：有机化合物之有机酸溶液 Chemical properties: organic acid solution of organic compounds			
危害物质名称 Name of hazardous	CAS 号 number	浓度范围 concentration range	备 注
冰醋酸 Glacial acetic	64-19-7	5%--15%	/
甲酸 formic acid	64-18-6	5%--10%	/
苯并咪唑 Imidazoprene	110534-15-1	3-5%	/
表面活性助剂 Surfactant	102-71-6	10%	/
纯净水 Purified water	/	77%--65%	/

三.危害辨识资料（ hazard identification data）

最重要危害效应 Most important hazard effect	健康危害效应：避免接触肌肤及眼睛.穿著适当之防护衣物. Health hazard effect: avoid contact with skin and eyes. Wear appropriate protective clothing
	环境影响：酸性（Environmental impact: Acid）
	物理性及化学性危害：腐蚀性 Physical and chemical hazards: corrosive
	特殊危害：无 Special hazard: None

主要症状：无 Main symptoms: None
物品危害分类:未分类 Hazard classification: unclassified

四.急救措施（first aid measures）

不同暴露途径之急救方法:First aid methods of different exposure routes: *皮肤接触：若不慎与皮肤接触时,立刻以大量清水冲洗,最好是以淋浴冲洗,于冲洗的同时,将衣物脱下,并继续冲洗最少 10 分钟,若起水泡或持续红肿即刻就医,受污染之衣物于再次使用前须水洗或干洗过。 *食入:让伤者立即饮用 240-300ml 之水.若伤者发生自然呕吐的情况时,将伤者嘴部抬出并持续灌以开水.以清水清洗嘴巴.保持患者温暖并给予适当的休息,即刻就医。 *Skin contact: in case of inadvertent contact with skin, wash immediately with plenty of water, preferably with a shower. Take off the clothes while washing, and continue to wash for at least 10 minutes. If there is blister or continuous swelling, see a doctor immediately. The contaminated clothes must be washed or dry cleaned before reuse. *Ingestion: let the injured drink 240-300ml of water immediately. In case of natural vomiting, lift out the mouth of the injured and continuously fill with boiled water. Wash the mouth with clear water. Keep the patient warm and give proper rest, and seek medical treatment immediately.
*食入：以清水冲洗嘴巴.让患者饮用 1-3 杯以冲淡胃中的成份,催吐并立即送医,若患者逐渐丧失意识,不可喂食任何食物. 眼睛接触：立刻以大量清水冲洗眼睛,并保持眼皮撑开,且至少冲洗 15 分钟.若持续红肿或疼痛即刻就医., 吸入：将患者移至空气新鲜处,若呼吸困难则给予氧气帮助呼吸.立即送医. *Ingestion: rinse the mouth with clear water. Let the patient drink 1-3 cups to dilute the ingredients in the stomach, induce vomiting and send to the doctor immediately. If the patient gradually loses consciousness, do not feed any food Eye contact: wash eyes immediately with plenty of water, keep eyelids open, and wash for at least 15 minutes. If there is continuous swelling or pain, see a doctor immediately,

Inhalation: move the patient to fresh air. If breathing is difficult, give oxygen to help breathe. Send to the doctor immediately

最重要症状及危害效应:

暴露途径:吸入,食入,眼睛及肌肤接触吸收.会影响眼睛,皮肤,呼吸系统,肝脏,肾脏,血液,神经系统.

对身体不同部位的危害:

眼睛:水溶液或蒸气会严重刺激结膜及伤害眼角膜.

皮肤:会对皮肤造成刺激.若大面积的接触及长期暴露,液体将经由肌肤吸收明显至毒的数量.重复或长期接触有以下效应:皮肤炎,肝脏损伤,肾脏损伤,头痛,中央神经系统衰竭,血液失序,暂时或永久性失明.

食入:大量吞食会有以下效应:严重刺激嘴巴,喉咙和消化道,肝脏损伤,肾脏损伤,中央神经系统衰竭,血液失序,暂时或永久性失明.

吞食可能会致命.

吸入:暴露在蒸气或烟雾下会有以下效应,严重刺激鼻子,喉咙和呼吸道,咳嗽,呼吸困难,恶心,想睡,肺水肿.

Most important symptoms and harmful effects:

Exposure route: inhalation, ingestion, eye and skin contact absorption. It will affect eyes, skin, respiratory system, liver, kidney, blood, nervous system

Hazards to different parts of the body:

Eyes: aqueous solution or vapor can seriously stimulate the conjunctiva and damage the cornea

Skin: can cause skin irritation. If large area contact and long-term exposure, the liquid will be absorbed through the skin to the amount of poison. Repeated or long-term contact has the following effects: dermatitis, liver damage, kidney damage, headache, central nervous system failure, blood disorder, temporary or permanent blindness

Ingestion: massive ingestion has the following effects: severe mouth, throat and digestive tract irritation, liver damage, kidney damage, central nervous system failure, blood disorder, temporary or permanent blindness

Swallowing can be fatal Inhalation: exposure to vapor or smoke can have the following effects, severely irritating the nose, throat and respiratory tract, coughing, Dyspnea, nausea, sleepiness, pulmonary edema
对急救人员防护：活性炭口罩，胶手套. Protection for first aid personnel: masks, rubber gloves
对就医之提示：请依症状治疗. Tips for medical treatment: please treat according to symptoms

五.灭火措施(Extinguishing measures)

适用灭火剂:可使用喷水，护醇泡沫,干粉或二氧化碳灭火. Suitable for extinguishing agents: spray water, alcohol foam, dry powder or carbon dioxide fire extinguishing.
灭火时可能遭遇之特殊危害：未知 Special hazards that may be encountered during fire fighting: unknown
特殊灭火程序：未知 Special fire fighting procedure: unknown
消防人员之特殊防护设备：请穿著全套衣物和配带自我维生装置 Special protective equipment for firefighters: please wear a full set of clothes and self-sustaining equipment

六.泄漏处理方法: leakage treatment method:

处置:必须于通风之良好之状态下使用 Disposal: must be used in a well ventilated state
储存:必须储存在原来的容器中,并存放于干燥低温,通风良好,远离直接日晒 Storage: must be stored in the original container, dry and low temperature, well ventilated, away from direct sunlight

七.操作处置与储存 Handling and storage

操作注意事项：密闭操作。操作人员要注意个人防护。搬运时要轻拿轻放，防止包装或容器损坏。备配泄漏应急处理设备。倒空的容器可能残留有害物。 Operation precautions: closed operation. Operators should pay attention

to personal protection. Handle with care when handling to prevent damage to the package or container. Prepare leakage emergency treatment equipment. Empty containers may contain harmful substances.
储存注意事项： 储存于阴凉、干燥、通风良好的库房。库内湿度最好小于 85%。包装必须密封。应与易（可）燃物、碱类,氧化剂等分开存放，切忌混存。 储区应备有合适的材料收容泄漏物。 Storage precautions: Store in a cool, dry and well ventilated warehouse. The humidity in the warehouse should be less than 85%. The packaging must be sealed. It shall be stored separately from inflammable (combustible), alkali, oxidant, etc., and shall not be mixed. The storage area shall be equipped with appropriate materials to contain the leakage.

八.暴露预防措施 Exposure precautions

工程控制:建议使用工程化系统来预防或控制暴露的情形发生,其中应包括人力的围堵,机械式的通风设备(排气)及处理时防护设备的控制。 Engineering control: it is recommended to use an engineering system to prevent or control the occurrence of exposure, which shall include the containment of manpower, mechanical ventilation equipment (exhaust) and the control of protective equipment during treatment.
控制参数: *八小时日时量平均容许浓度/短时间时量平均容许浓度/最高容许浓度:1 毫克/立方 *生物指针:无 Control parameters: *Eight hour daily average allowable concentration / short time average allowable concentration / maximum allowable concentration: 1 mg / m3 *Biological pointer: None
个人防护设备: *呼吸防护:当有可能暴露于高蒸气浓度下,需配带呼吸保护装置.必须依据工作场地之空气中物质的浓度,配戴适当之防毒面具且不可以超出防毒

面罩之工作时限. *手部防护:配带nitrile或Buty1橡胶制手套.亦可使用你的专业安全人员建议的耐酸碱手套. *眼睛防护:必须随时配戴护目镜. *皮肤及身体防护:穿著一般工作服 Personal protective equipment: *Respiratory protection: when it is possible to be exposed to high vapor concentration, it is necessary to wear respiratory protection device. It is necessary to wear appropriate gas mask according to the concentration of substances in the air of the workplace and the working time limit of the gas mask shall not be exceeded *Hand protection: wear nitrile or buty1 rubber gloves. You can also use the acid and alkali resistant gloves recommended by your professional safety personnel *Eye protection: goggles must be worn at all times *Skin and body protection: wear general work clothes
卫生措施:必须于通风良好之状态下使用. Hygienic measures: it must be used in a well ventilated state

九.物理及化学性质 Physical and chemical properties

物质状态:液体 Material state: liquid	形状：液态 Shape: liquid
颜色：蓝色至沉清液体	气味：刺激性
PH 值：》3.0	沸点:100℃
分解温度:	闪火点：90 摄氏度
自燃温度:	爆炸界限:无界定
蒸气压:同水	蒸气密度:重于空气
比重：1.0-1.03	(对水)溶解度:完全可溶解
Color: blue to clear liquid smell: irritant PH value: 3.0 boiling point: 100 ℃ Decomposition temperature: flash point: 90 ℃ Spontaneous combustion temperature: explosion limit: no limit	

Vapor pressure: same as water vapor density: heavier than air Specific gravity: 1.0-1.03 (for water) solubility: completely soluble

十.安全性及应性 Safety and response

安定性:在正常状况下是安定的.
特殊情况下可能之危害反应:
应避免之状况:接触不兼容的物质,暴露于直接日晒.
应避免之物质:强还原剂,强碱.
危害分解物:无
Stability: stable under normal conditions Possible hazardous reactions under special circumstances: Conditions to avoid: exposure to incompatible substances, direct sun exposure Substances to be avoided: strong reducing agent, strong base Hazardous decomposition products: None

十一.毒性资料 Toxicity data

急毒性:1900mg/kg
局部效应:刺激
致敏感性:有
慢毒性或长期毒性:中等
特殊效应:无
Acute toxicity: 1900mg / kg Local effect: stimulation Sensitivity: Yes Slow or long term toxicity: medium Special effect: None

十二.生态资料 Ecological data

可能之环境影响/环境流布:本产品为非挥发性但为水溶性物质并会被分隔为不同含水区间.此产品难吸收在土壤或沉淀物之上.但会被溶解到土壤中.本产品会迅速溶于水中.但会对水中生物产生危害。 Possible environmental impact / environmental distribution: This product is non-volatile but water-soluble and will be divided into

different water containing areas. This product is difficult to absorb on the soil or sediment, but it will be dissolved in the soil. This product will quickly dissolve in the water, but it will cause harm to aquatic organisms.

十三.废弃处置方法 Waste disposal method

废弃得置方法: 废弃物处置:依据当地国家法规处置弃物及残留物.此产品被评估具 RCRA 的物质，但并不符合有害废弃物的标准，若本品以购买时的形式补充丢弃，依据 RCRA，产品使用者有责任在丢弃时决定其是否符合 RCRA 有害废弃物的标准，这是因为产品的使用，转换，混合，处置等，将可能使用成为有害物质。 废弃容器处置:在容器未被清洗干净前,不可将标签去除.空瓶可能仍含有有害之残留物需小心处理. Disposal method: Waste disposal: dispose of wastes and residues in accordance with local national regulations. This product is evaluated to have substances with RCRA, but it does not meet the standards of hazardous wastes. If this product is added and discarded in the form of purchase, according to RCRA, the user of the product is responsible for determining whether it meets the standards of RCRA hazardous wastes when it is discarded, because of the use, conversion, mixing, disposal, etc. of the product , will likely be used as a hazardous substance. Disposal of waste container: do not remove the label before the container is cleaned. The empty bottle may still contain harmful residues which need to be handled carefully

十四.运送资料 Shipping information

国际运送规定:
联合国编号:未分类
国内运送规定:
特殊运送方法及注意事项:
International Shipping Regulations:

UN No.: unclassified Domestic delivery regulations: Special delivery methods and precautions:

十五.法规资料 Regulatory data

适用法规:国标 Applicable regulations: National Standard

十六:其它资料 Other information

公司名称	深圳市宝鑫化工技术有限公司	
制表人	职称:经理	姓名(签章)：吕平
制表日期:	2010/01/06	
Company name: shenzheng baoxinchemical technology co.ltd Preparer Title: manager name (seal): LV Ping Date of preparation: 2010 / 01 / 06		

Material Safety Data Sheet

Copyright, 2003, 3M Company. All rights reserved. Copying and/or downloading of this information for the purpose of properly utilizing 3M products is allowed provided that: (1) the information is copied in full with no changes unless prior written agreement is obtained from 3M, and (2) neither the copy nor the original is resold or otherwise distributed with the intention of earning a profit thereon.

This material safety data sheet (MSDS) is provided as a courtesy in response to a customer request. This product is not regulated under, and a MSDS is not required for this product by the OSHA Hazard Communication Standard (29 CFR 1910.1200) because, when used as recommended or under ordinary conditions, it should not present a health and safety hazard. However, use or processing of the product not in accordance with the product's recommendations or not under ordinary conditions may affect the performance of the product and may present potential health and safety hazards.

SECTION 1: PRODUCT AND COMPANY IDENTIFICATION

PRODUCT NAME: 3M(TM) Laminating Adhesives 9471LE, 9472LE, 9671LE, 9672LE, 9653LE, 9453LE
MANUFACTURER: 3M
DIVISION: Industrial Adhesives and Tapes
ADDRESS: 3M Center
St. Paul, MN 55144-1000

EMERGENCY PHONE: 1-800-364-3577 or (651) 737-6501 (24 hours)

Issue Date: 06/20/2003
Supercedes Date: 05/22/2001

Document Group: 08-9111-9

Product Use:
Specific Use: Laminating Adhesive

SECTION 2: INGREDIENTS

Ingredient	C.A.S. No.	% by Wt
TACKIFIED ACRYLATE POLYMER	None	100

SECTION 3: HAZARDS IDENTIFICATION

3.1 EMERGENCY OVERVIEW

Specific Physical Form: Roll of Tape
Odor, Color, Grade: Tan, Acrylate odor when unrolled.
General Physical Form: Solid
Immediate health, physical, and environmental hazards: This product, when used under reasonable conditions and in accordance with the 3M directions for use, should not present a health hazard. However, use or processing of the product in a manner not in accordance with the product's directions for use may affect the performance of the product and may present potential health and safety hazards.

3.2 POTENTIAL HEALTH EFFECTS

Eye Contact:
No health effects are expected.

Skin Contact:
No health effects are expected.

Inhalation:
No health effects are expected. This product may have a characteristic odor; however, no adverse health effects are anticipated.

Ingestion:
No health effects are expected.

SECTION 4: FIRST AID MEASURES

4.1 FIRST AID PROCEDURES

The following first aid recommendations are based on an assumption that appropriate personal and industrial hygiene practices are followed.

Eye Contact: No need for first aid is anticipated.

Skin Contact: No need for first aid is anticipated.

Inhalation: No need for first aid is anticipated.

If Swallowed: No need for first aid is anticipated.

SECTION 5: FIRE FIGHTING MEASURES

5.1 FLAMMABLE PROPERTIES

Autoignition temperature	*No Data Available*
Flash Point	*Not Applicable*
Flammable Limits - LEL	*Not Applicable*
Flammable Limits - UEL	*Not Applicable*

5.2 EXTINGUISHING MEDIA
Use fire extinguishers with class B extinguishing agents (e.g., dry chemical, carbon dioxide).

5.3 PROTECTION OF FIRE FIGHTERS

Special Fire Fighting Procedures: Wear full protective clothing, including helmet, self-contained, positive pressure or pressure demand breathing apparatus, bunker coat and pants, bands around arms, waist and legs, face mask, and protective covering for exposed areas of the head.

Unusual Fire and Explosion Hazards: No unusual fire or explosion hazards are anticipated.

Note: See STABILITY AND REACTIVITY (SECTION 10) for hazardous combustion and thermal decomposition information.

SECTION 6: ACCIDENTAL RELEASE MEASURES

Accidental Release Measures: Not applicable.

SECTION 7: HANDLING AND STORAGE

7.1 HANDLING

Avoid prolonged or repeated skin contact. This product is considered to be an article which does not release or otherwise result in exposure to a hazardous chemical under normal use conditions.

7.2 STORAGE

Not applicable.

SECTION 8: EXPOSURE CONTROLS/PERSONAL PROTECTION

8.1 ENGINEERING CONTROLS

Not applicable.

8.2 PERSONAL PROTECTIVE EQUIPMENT (PPE)

8.2.1 Eye/Face Protection

Avoid eye contact.

8.2.2 Skin Protection

Avoid prolonged or repeated skin contact. Gloves not normally required.

8.2.3 Respiratory Protection

Under normal use conditions, airborne exposures are not expected to be significant enough to require respiratory protection.

8.2.4 Prevention of Swallowing

Not applicable.

8.3 EXPOSURE GUIDELINES

None Established

SECTION 9: PHYSICAL AND CHEMICAL PROPERTIES

Specific Physical Form:	Roll of Tape
Odor, Color, Grade:	Tan, Acrylate odor when unrolled.
General Physical Form:	Solid
Autoignition temperature	*No Data Available*
Flash Point	*Not Applicable*
Flammable Limits - LEL	*Not Applicable*
Flammable Limits - UEL	*Not Applicable*
Boiling point	*Not Applicable*

Vapor Density	*Not Applicable*
Vapor Pressure	*Not Applicable*
Specific Gravity	Approximately 1.01 [*Ref Std:* WATER=1]
pH	*Not Applicable*
Melting point	*No Data Available*
Solubility in Water	Nil
Evaporation rate	*Not Applicable*
Volatile Organic Compounds	*No Data Available*
Percent volatile	*No Data Available*
VOC Less H2O & Exempt Solvents	*No Data Available*
Viscosity	*Not Applicable*

SECTION 10: STABILITY AND REACTIVITY

Stability: Stable.

Materials and Conditions to Avoid: None known

Hazardous Polymerization: Hazardous polymerization will not occur.

Hazardous Decomposition or By-Products

Substance	Condition
Hydrocarbons	During Combustion
Carbon monoxide	During Combustion
Carbon dioxide	During Combustion

Hazardous Decomposition: Under recommended usage conditions, hazardous decomposition products are not expected. Hazardous decomposition products may occur as a result of oxidation, heating, or reaction with another material.

SECTION 11: TOXICOLOGICAL INFORMATION

Please contact the address listed on the first page of the MSDS for Toxicological Information on this material and/or its components.

SECTION 12: ECOLOGICAL INFORMATION

ECOTOXICOLOGICAL INFORMATION

Not applicable.

CHEMICAL FATE INFORMATION

Not applicable.

SECTION 13: DISPOSAL CONSIDERATIONS

Waste Disposal Method: Dispose of waste product in a sanitary landfill. As a disposal alternative, incinerate in an industrial or

commercial facility.

Since regulations vary, consult applicable regulations or authorities before disposal.

SECTION 14:TRANSPORT INFORMATION

Please contact the emergency numbers listed on the first page of the MSDS for Transportation Information for this material.

SECTION 15: REGULATORY INFORMATION

US FEDERAL REGULATIONS

Contact 3M for more information.

311/312 Hazard Categories:
Fire Hazard - No Pressure Hazard - No Reactivity Hazard - No Immediate Hazard - No Delayed Hazard - No

STATE REGULATIONS

Contact 3M for more information.

CHEMICAL INVENTORIES

This product is an article as defined by TSCA regulations, and is exempt from TSCA Inventory listing requirements.

Contact 3M for more information.

INTERNATIONAL REGULATIONS

Contact 3M for more information.

This MSDS has been prepared to meet the U.S. OSHA Hazard Communication Standard, 29 CFR 1910.1200.

SECTION 16: OTHER INFORMATION

NFPA Hazard Classification
Health: 0 **Flammability:** 1 **Reactivity:** 0 **Special Hazards:** None

National Fire Protection Association (NFPA) hazard ratings are designed for use by emergency response personnel to address the hazards that are presented by short-term, acute exposure to a material under conditions of fire, spill, or similar emergencies. Hazard ratings are primarily based on the inherent physical and toxic properties of the material but also include the toxic properties of combustion or decomposition products that are known to be generated in significant quantities.

Reason for Reissue: The MSDS has been revised because 3M has adopted the 16-section ANSI/ISO format. The potential hazards of the product have not changed. We encourage you to reread the MSDS and review the information.

DISCLAIMER: The information in this Material Safety Data Sheet (MSDS) is believed to be correct as of the date issued. 3M MAKES NO WARRANTIES, EXPRESSED OR IMPLIED, INCLUDING, BUT NOT LIMITED TO, ANY IMPLIED WARRANTY OF MERCHANTABILITY OR FITNESS FOR A PARTICULAR PURPOSE OR COURSE OF PERFORMANCE OR USAGE OF TRADE. User is responsible for determining whether the 3M product is fit for a particular purpose and suitable for user's method of use or application. Given the variety of factors that can affect the use and application of a 3M product, some of which are uniquely within the user's knowledge and control, it is essential that the user evaluate the 3M product to determine whether it is fit for a particular purpose and suitable for user's method of use or application.

3M provides information in electronic form as a service to its customers. Due to the remote possibility that electronic transfer may have resulted in errors, omissions or alterations in this information, 3M makes no representations as to its completeness or accuracy. In addition, information obtained from a database may not be as current as the information in the MSDS available directly from 3M.

3M MSDSs are available at www.3M.com

4.MSDS

江阴凯博通信科技有限公司

JIANGYIN KAIBO COMMUNICATION TECHNOLOGY CO.,LTD.

Material Safety Data Sheet（物質安全資料表）

一、　物品与厂商资料

物品名称：同轴高频线

物品编号：KB113 系列

制造商或供货商名称、地址：江阴市凯博通信科技有限公司/江苏省江阴市澄江镇梅园大街 391 号

紧急联络电话/传真电话：0510-86070001/86070020

二、　成分辨识资料

纯物质：

中英文名称：聚全氟乙丙烯 FLUORINATED PROPYLENE ETHYLENE/镀银铜线 Cu-silver plated/镀锡线 TINNED COPPER

同义名称：FEP/SC/TX

危害物质成分(成分百分比)：无

危害物质：

危害物质	浓度或浓度范围（单位：ppm）	
铅及其化合物 Pb	≤90	
镉及其化合物 Cd	≤75	
汞及其化合物 Hg	≤1000	
六价铬及化合物	≤1000	
卤素	氯 Cl≤900	氯 Cl+溴 Br≤1500
	溴 Br≤900	
SVHC15 种物质	禁止使用	

三、危害辨识数据

最重要危害效应	健康危害效应：在 260℃ 以上,可能会有吸入分解气体的危险.一定要安装排气装置.
	环境影响：要按废弃物处理及清扫法律法规处理,绝对不可燃烧.
	物理性及化学性危害：物理化学性能及其稳定,不易降解,不得擅自填埋 .
	特殊危害：　无
主要症状：　对人的神经系统产生损害	
物品危害分类：大气和水源	

四、急救措施

不同暴露途径之急救方法：

· 吸入：到空气流通处换气.

· 皮肤接触：无

· 眼睛接触：无

· 食入：　不消化,排出.

最重要症状及危害效应：无
对急救人员之防护：对流换气
对医师之提示： 吸氧

五、灭火措施

适用灭火剂： 通用
灭火时可能遭遇之特殊危害： 避免分解气体吸入
特殊灭火程序：无
消防人员之特殊防护设备：防毒面罩

六、泄漏处理方法

个人应注意事项：粉状树脂
环境注意事项： 不可填埋
清理方法：要按废弃物处理及清扫法律法规处理，绝对不可燃烧.

七、安全处置与储存方法

处置：避免与高温和火源接触.
储存：通风干燥处.

八、暴露预防措施

工程控制：无
控制参数： · 八小时日时量平均容许浓度/短时间时量平均容许浓度/最高容许浓度： · 生物指标：
个人防护设备： · 呼吸防护：安装排气装置 · 手部防护：无 · 眼睛防护：无 · 皮肤及身体防护：无
卫生措施：应将衣服上附着的灰尘抖落，手脸洗净，不要让其附着于香烟上.

九、物理及化学性质

物质状态：固体	形状：透明颗粒
颜色：透明	气味： 无
pH 值： 7	沸点/沸点范围： /
分解温度： 360℃	闪火点： /
自燃温度： /	爆炸界限： /
蒸气压： /	蒸气密度： /
密度： 2.2	溶解度： /

十、安定性及反应性

安定性：很稳定
特殊状况下可能之危害反应：高温或燃烧分解气体对人体神经系统的损害.
应避免之状况：绝对不可燃烧.

应避免之物质：金属钠及其强酸的混合物 .
危害分解物： 气体及粉尘.

十一、毒性资料

急毒性：/
局部效应：/
致敏感性： /
慢毒性或长期毒性： /
特殊效应： /

十二、生态资料

可能之环境影响/环境流布：不降解,禁填埋

十三、废弃处置方法

废弃处置方法：按废弃物处理及清扫法律法规要求送专业资质处理公司处置.

十四、运送资料

国际运送规定：/
联合国编号： /
国内运送规定： 无
特殊运送方法及注意事项：无

十五、法规资料

适用法规：遵循欧盟 REACH 法规相关要求。

十六、其它数据

参考文献	杜邦产品说明/SONY 限用物资标准
制窗体位	名称：江阴凯博通信科技有限公司
	地址/电话：江阴市澄江街道梅园大街 391 号/0510-86070017
制 表 人	姓名(签章)：庄科洁
制表日期	2011/11/3

MATERIAL SAFETY DATA SHEET (MSDS)

Issued: Dec 20 , 2007
Revised: Dec 20 , 2007

File No. 2302

1. CHEMICAL PRODUCT & COMPANY IDENTIFICATION

CHEMICAL PRODUCT NAME :	DURANEX XFR4840
NAME OF COMPANY :	WinTech Polymer Ltd.
SECTION IN CHARGE :	Quality Assurance Dept.
ADDRESS :	2-18-1 Konan, Minato-ku, Tokyo,108-8280 Japan
TELEPHONE NUMBER :	03-6711-8605
FACSIMILE NUMBER :	03-6711-8616

2. COMPOSITION/INFORMATION ON INGREDIENTS

SUBSTANCE/PREPARATION	:	Preparation
COMMON CHEMICAL NAME	:	Polybutyleneterephthalate
SYNONYMS	:	Polybutyleneterephthalate(PBT)
INGREDIENTS AND COMPOSITION	:	PBT≧80%, Phosphorus Flame retardant and others ≦20%
CHEMICAL FORMURA	:	
SERIAL № IN OFFICIAL GAZETTE	:	7-1039（base resin） (Law Concerning Examination and Regulation of Manufacture,etc.,of Chemical Substances)
CAS №	:	２４９６８－１２－５（base resin）

3. HAZARDS IDENTIFICATION

PHYSICAL AND CHEMICAL HAZARDS	:	Not applicable
HUMAN HEALTH EFFECTS	:	Not applicable
ENVIRONMENTAL EFFECTS	:	Not applicable
PHYSICAL AND CHEMICAL HAZARDS	:	It is inflammable substance and combustible if an igniting source is existent. Neither dangerous reaction,fire nor explosion can be caused under normal conditions.
THE CLASSIFICATION	:	Not applicable

4. FIRST-AID MEASURES

INGESTION	:	Help to vomit as much as possible. If sick feeling continues,and ask a physician for advice.
INHALATION	:	When a gas generated from the molten polymer,especially fume generated during combustion or heat, has been inhaled,remove fresh air without delay and wait until the victim is recovered. If sick feeling continues,ask a physician for advice.
SKIN CONTACT	:	Cool the contacted skin with clean water without delay,if a contact with the polymer In a molten form. Do not force to remove the solid resin on the skin. If any burns are observed on the skin,ask a physician for advice.

EYE CONTACT	:	Cool and rinse the eye with clean water for at least 15 minutes when the eyes had contact with molten polymer. In case of wearing contact lenses,remove the lenses as soon as possible,and ask a physician for advice. When the eye had contact with the polymer in an ordinary solid form,rinse the eye with clean water without delay. If the discomfort persists,ask a physician for advice.

5. FIRE-FIGHTING MEASURES

EXTINGUISHING MEDIA	:	Water,form fire-extinguishing agent,powder fire-extinguishing agent,and carbon dioxide gas.
SPECIFIC METHODS	:	Extinguish the fire with water. A method of extinguishing an ordinary fire may be applied. Do not apply water directly to processing machines.
SPECIFIC HAZARDS	:	Incomplete combustion leads to generation of toxic gases such as carbon monoxide or tetrahydrofuran,in addition to carbonic acid gas and water.
SPECIAL EQUIPMENT FOR THE PROTECTION OF FIREFIGHTERS	:	In case the fire gained force,use a gas mask or other protective equipment.

6. ACCIDENTAL LEAKAGE MEASURES

PERSONAL PRECAUTIONS	:	When pellets were spilled on the road or floor,wipe them off with a besom or cleaner not to cause slipping.
ENVIRONMENTAL PRECAUSION	:	Handle the spillage in accordance with provisions given in the "Resin pellet spillage preventive manual",in order to prevent intakes by marine animals and birds.

7. HANDLING AND STORAGE

HANDLING	:	This resin in a pellet form will neither ignite nor explode at room temperatures.
HANDLING 2	:	For molding work,effective means for local exhaust are required to discharge gases generated by melt processing.
HANDLING 3	:	Avoid inhaling of gases generated in moulding work. Do not directly touch resin of high temperature.
HANDLING 4	:	Avoid retaining hot resin in the processing machines for many hours.
HANDLING 5	:	This pellets spilled on the floor are likely to cause slipping. Remove such spillage at any times.
STORAGE	:	Keep the substance away from any fire or heat sources for the sake of safe storage.
RECOMMENDED PACKAGING MATERIALS	:	No information.

8. EXPOSURE CONTROL / PERSONAL PROTECTION

CONTROL CONCENTRATION	:	None at present
PERMISSIBLE CONCENTRATION	:	OSHA PEL/1985 Max. permissible concentration of inactive powder 15mg/㎥ - ditto - (Aspiration) 5 mg/㎥ ACGIH TLV/1992 1993 Exposure limit of the powder TWA 10 mg/㎥
ENGINEERING MEASURE	:	When handling dust: Use totally enclosed containers resisting dust explosion. When heat melted in molding: Effective local ventilation must be provided.

PERSONAL PROTECTIVE EQUIPMENT	:	
RESPIRATORY PROTECTION	:	Wear a dust-proof mask.
EYE PROTECTION	:	Wear protective glases or goggles.
HAND PROTECTION	:	Wear heat-resisting gloves against burns, when handling molten polymer.
SKIN & BODY PROTECTION	:	Wear long sleeve clothes against burns, when handling molten polymer.

9. PHYSICAL AND CHEMICAL PROPERTIES

APPEARANCE etc.	:	Pellet
BOILING POINT	:	Not applicable
VAPOUR PRESSURE	:	Not applicable
VOLATILITY	:	Not applicable
SUBLIMATION	:	None
MELTING POINT	:	228℃
DENSITY	:	1.32g/㎤
SOLUBILITY	:	Insolube in water
FLASH POINT	:	300℃ or higher
IGNITION POINT	:	300℃ or higher
EXPLOSION PROPERTY	:	Not applicable
INFLAMMABILITY	:	None
REACTIVITY WITH WATER	:	None
OXIDIZABILITY	:	None
SELF-REACTIVITY	:	None
DUST EXPLOSIVENESS	:	Upper explosion limit : Not applicable. Lower explosion limit : 35g/㎥

10. STABILITY AND REACTIVITY

STABILITY AND REACTIVITY	:	Stable for nomal storage or handling.

11. TOXICOLOGICAL INFORMATION

SKIN CORROSIVE OROPERTIES	:	No finding.
SENSITIZING & IRRITANT EFFECTS	:	Gas generated in drying or melting is irritating eyes and skins.
ACUTE TOXICITY(INCLUDING LD50)	:	No finding.
SUBACUTE TOXICITY	:	No finding.
CHRONIC TOXICITY	:	No finding.

CARCINOGENECITY	:	No finding.
MUTAGENECITY(Micro organisms,chromosomal aberration)	:	No finding.
REPRODUCTIVE TOXICITY	:	No finding.
TERATOGENICITY	:	No finding.
OTHERS(Including generation of hazardous gases by reaction with water,for ezample)	:	No finding in this report means that there will be no hazard in general,but no proving data available at the time of reporting.
OTHER CAUTIONS	:	With regard to dust,the maximum permissible concentration and limits are fixed by OSHA and ACGIH.

12. ECOLOGICAL INFORMATION

BIODEGRADABILITY	:	No finding.
BIOACCUMULATION	:	No finding.
FISH TOXICITY	:	No finding.

13. DISPOSAL CONSIDERATION

WASTE FROM RESIDUES	:	This is designated as waste plastics among industrial wastes by the Wastes Disposal Law. Disposal waste pellets through licensed wastes handlers or local autonomous bodies if they are handling wastes disposal.
WASTE FROM RESIDUES 2	:	When disposed by incineration,use the well controlled incinerators in accordance with the Wastes Disposal Law,Air Pollution Control Law and Water Pollution Prevention Law.

14. TRANSPORT CONSIDERATION

UN CLASSIFICATION NUMBER	:	Not applicable
OTHER CAUSIONS	:	Handle with care so as not to give damages to containers or not to be subjected to wetting.
OTHER CAUSIONS 2	:	Secure the containers firmly so as not to cause collapsing.

15. REGULATORY INFORMATION

WASTE DISPOSAL LAW	:	Waste plastics among industrial wastes.

16. OTHER INFORMATION

HANDLING OF THE DETAILS GIVEN ABOVE	:	This MSDS is the English version translated from the Japanese MSDS which is prepared for domestic use. Details given above are based on references, information and data available at this moment, but no warranty can be made on exactness of these details. They are also prepared on the assumption that the product will be handled in a normal way. For special handling, adequate safety and environmental measures should be taken in respect to its applications. Our products are not specifically intended for implants for medical and dental applications, and therefore they are not recommended for such applications. "No finding" in this report means that there will be no hazard in general, but no proving data is available at the time of reporting.

To I-PEX Co.,Ltd

MATERIAL SAFETY DATA SHEET

MSDS FILE No. (KURAMI WORKS) : 05−1225 (based on Form OSHA-174)

IDENTITY (AS Used on Label and List)

Product Class : Phosphor Bronze Strip
Trade Name : JIS H3130 C5210R (Equivalent to ASTM B103 C52100)
CAS No. : Copper: 7440-50-8, Tin: 7440-31-5, Phosphor: 7723-14-0

Chemical Composition

	Content(wt-%)	CAS No.
Tin(Sn)	7. 0~9. 0	7440−31−5
Phosphor(P)	0. 03~0. 35	7723−14−0
Copper(Cu)	Balance	7440−50−8
Sn+P+Cu	99. 7≦	-

Section I

Manufacturer's Name
NIKKO METAL MANUFACTURING CO., LTD.
KURAMI WORKS

Address
3 Kurami Samukawa-cho
Kouza-gun Kanagawa prefecture
253-0101 JAPAN

Telephone Number for Information (Quality Assurance)
+81-467-75-7285

Facsimile Number for Information (Quality Assurance)
+81-467-74-6971

Date Prepared
May 24th, 2005

Signature of Person in Charge
Chihiro Izumi
IZUMI, Chihiro
Senior Technical Supervisor, Quality Assurance

Signature of Person Responsible
Hiroaki Watanabe
WATANABE, Hiroaki
Manager, Quality Assurance Section

Section II Hazardous Ingredients / Identity Information

Hazardous Components (Specific Chemical Identity : Names OSHA Pel ACGIH TLV

Nothing for ordinary service condition

Section III Physical / Chemical Characteristics

Boiling Point	2630 ℃ for Copper 2275 ℃ for Tin	Specific Gravity (H20 = 1)	8.80
Vapor Pressure (mmHg)	N/A	Melting Point	1025 deg. centi. for C5210 Phosphor Bronze
Vapor Density (Air = 1)	N/A	Evaporation Rate (Butyl Acetate = 1)	N/A

Solubility in Water
N/A

Appearance and Odor
Brown − Red (solid) : Odor − None

Section IV Fire and Explosion Hazard Data

Flash Point (Method Used)	Flammable Limits	LEL	UEL
N/A	N/A	N/A	N/A

Extinguishing Media
N/A (stable , nonflammable substance)

Special Fire Fighting Procedures
Not specified

Unusual Fire and Explosion Hazards
Metal products do not present fire or explosion hazards under normal conditions.

Section V Reactivity Data

Stability	Unstable		Conditions to Avoid
	Stable	×	

Incompatibility (Materials to Avoid)

Nothing

Hazardous Decomposition or Byproducts

Nothing

Hazardous Polymerization	May Occur		Conditions to Avoid
	Will Not Occur	×	

Section VI Health Hazard Data

Route(s) of Entry :	Inhalation ?	Skin ?	Ingestion ?
	N/A	N/A	N/A

Health Hazardous (Acute and Chronic)

N/A

Carcinogenicitry :	NTP ?	IARC Monographs ?	OSHA Regulated ?
	N/A	N/A	N/A

Signs and Symptoms of Exposure

N/A

Medical Conditions
Generally Aggravated by Exposure N/A

Emergency and First Aid Procedures

N/A

Section VII Precautions for State Handling and Use

Steps to Be Taken in Case Material Is Released or Spilled

N/A

Waste Disposal Method

Collect scrap for remelting.

Precautions to Be Taken in Handling and storing

For Handling

- Put safety gloves on to protect your hands from edges of coils which might cut your hands.
- Wear safety glasses when metal powders or chips are expected to be generated in the work.
- Put safety shoes on when handling heavy coils.

For Storing

- The environment of stocking area should be free from acid, alkali, chloride, sulfide and other corrosive chemicals to prevent from rusting or corrosion.

Other Precautions

No special requirements

Section VIII Control Measures

Respiratory Protection (Specify Type)

Wearing a mask be recommended in the work such as abrasion and buffing which generates metal powders or chips.

Ventilation	Local Exhaust	Special
	None	None
	Mechanical (General)	Other
	None	None

Protective Gloves

Put safety gloves on to protect your hands from edges of coils which might cut your hands.

Eye Protection

Wear safety glasses when metal powder is expected to be generated in the work.

Other Protective Clothing or Equipment

Put safety shoes on when handling heavy coils.

Work / Hygienic Practices

None

Influence to environments

Fish on toxicity : TLm 48 hr. on $CuSO_4$
Salmogairdeneri : 0.038 ~ 0.8 ppm
Oryzias Latipes : 2.1 ~ 24ppm

2005 . 2 .27

Material Safety Data Sheet

1. Manufacturer

- Company HARADA Metal Industry Co., Ltd.
- Address 10−18 Sasamekitamati, Toda, Saitama 335-0033, Japan

  TEL 048−422−1588

  FAX 048−449−6303
- Counter The domestic business department business primary and second section

  TEL 048−441−5115

  FAX 048−444−9104

  The domestic business department OSAKA service office

  TEL 06−531−8094

  FAX 06−531−8096

  The domestic business department NAGOYA service office

  TEL 052−821−9778

  FAX 052−822−7500

  The overseas business department export section

  TEL 048−441−5115

  FAX 048−444−9104
- Urgent place to contact

  The quality assurance department

  TEL 048−422−1588

  FAX 048−449−6303

2. Products

- Phosphor bronze plates and strips for springs
- Phosphor bronze plates and strips

3. Specification of the material

- The division of mixture or single product : Single product
- The chemical name : Copper alloy
- Chemical composition and content rate(wt.%)

Element	Percent					CAS No.
	C5210	C5212	C5191	C5102	C5111	
Copper	rem.	rem.	rem.	rem.	rem.	7440-50-8
Tin	7.0~9.0	7.0~9.0	5.5~7.0	4.5~5.5	3.5~4.5	7440-31-5
Phosphorus	0.03~0.35	0.03~0.35	0.03~0.35	0.03~0.35	0.03~0.35	7723-14-0
Lead	0.05 max	0.05 max	0.05 max	0.05 max	0.05 max	7439-92-1
Iron	0.1 max	0.1 max	0.1 max	0.1 max	0.1 max	7439-89-6
Zinc	0.2 max	0.2 max	0.2 max	0.2 max	0.2 max	7440-66-6

4. Classification of harmfulness

- The name of classification : Not classified into the dangerous harmfulness material.
- The danger : No knowledge
- The harmfulness : No knowledge
- The effect for the environment : No knowledge

5. First aid

- Eyes : Flush the water. Consult the doctor, when the simulation of the eye continues.
- Skin : Flush the water.
- Inhalation : Consult the doctor, when it was large inhaled.

6. The treatment in the fire

- Nonflammable.

7. Leakage

- Not applied (because of solid)

8. Attention in handling and storage

- Stored at the ordinary—temperature and usual humidity.
- Prohibition of the rapid temperature and humidity change.

9. Treatment on the exposure prevention

- Standard control concentration : Not regulated.
- Allowable temperature : Not regulated.
- Facility countermeasure : The whole ventilation is desirable.
- Protector : For lung ,the wear of protection mask is desirable for the power handling.
  For hand ,the wear of protective glove is desirable.
  For eyes ,the wear of safety goggles is desirable for the power handling.
  For body , the wear of protective clothing is desirable.

10. Physical and chemical characteristic

- Appearance and smell : The solid with the metallic luster. Odoless.
- Boiling point : The indistinctness.
- Solubility : Dissolves in the inorganic acid.

	C5210	C5212	C5191	C5102	C5111
Specific gravity	8.82	8.82	8.85	8.88	8.90
Melting point	1020℃	1020℃	1045℃	1050℃	1060℃

11. Information for danger

- Fire point : The indistinctness.
- Stability : Show the stability at room temperature and in the air.
- The situation to be avoided : —

12. Information for harmfulness

- The powder stimulates eyes , skin and bronchi.
- Produce the ulcer and the hepatic disorder rarely.

13. Information for environment

- No knowledge.

14. Attention for scrapping

- Possible to deal with ,as an industrial waste.

15. Attention for transportation

- No damage transportation is desirable.

16. Applying act

- —