Email: sales@autel.com
Web: www.autel.com

Quick Reference Guide

MaxiSys MS906 Pro-TS

Thank you for purchasing this Autel MaxiSys MS906 Pro-TS. Our tools are manufactured to a high standard and — when used according to these instructions and properly maintained — will provide years of trouble-free performance.

◎ MaxiSys MS906 Pro-TS Display Tablet

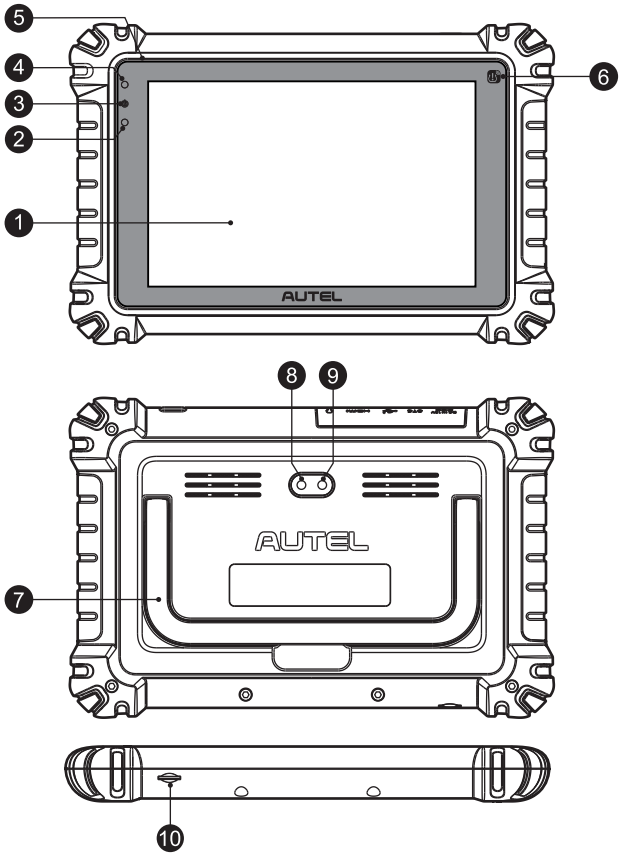

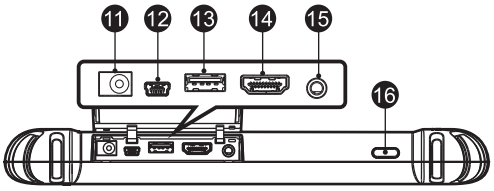

1. 8-inch LED Capacitive Touchscreen
2. Ambient Light Sensor — detects ambient brightness
3. Power LED
4. Front Camera
5. Microphone
6. TPMS Service Symbol — indicates the position of the embedded TPMS antenna
7. Collapsible Stand — extends from the back to allow hands-free viewing of the tablet
8. Rear Camera
9. Camera Flash
10. TF Card Slot
11. DC Power Supply Input Port
12. Mini USB Port
13. USB Port (for VCI Connection)
14. HDMI Port
15. Headset Jack (3-band 3.5mm)
16. Lock/Power Button — press and hold to turn on/off the tablet, or tap to lock the screen

◎ VCI (Vehicle Communication Interface) Device — MaxiVCI V200

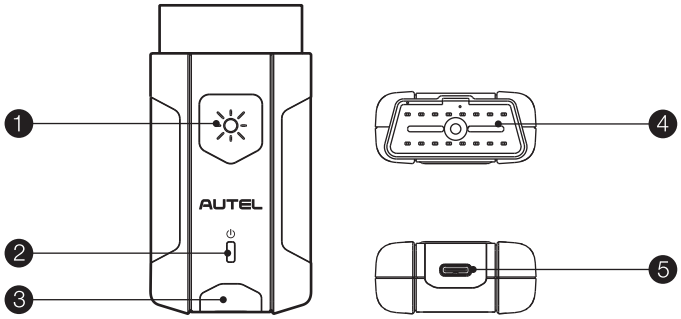

1. Flashlight Power Button
2. Power LED
3. Vehicle/Connection LED
4. Vehicle Data Connector (16-pin)
5. USB Port

VCI LED Description

LED	Color	Description
Power LED	Yellow	The VCI is powered on and performing self-check.
	Green	The VCI is ready for use.
	Flashing Red	The firmware is updating.
Vehicle /Connection LED	Green	• **Solid Green:** The VCI is connected via USB cable. • **Flashing Green:** The VCI is communicating via USB cable.
	Blue	• **Solid Blue:** The VCI is connected via Bluetooth. • **Flashing Blue:** The VCI is communicating via Bluetooth.

IMPORTANT: Before operating or maintaining this unit, please read these instructions carefully, paying extra attention to the safety warnings and precautions. Failure to use this product properly may cause damage and/or personal injury and will void the product warranty.

1

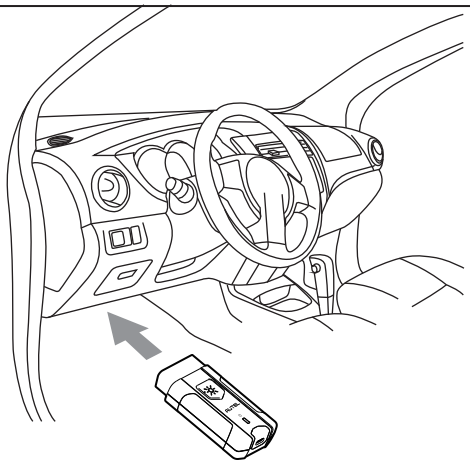

- Insert the Vehicle Data Connector on the MaxiVCI V200 into the vehicle's DLC, which is generally located under the vehicle dashboard.

2

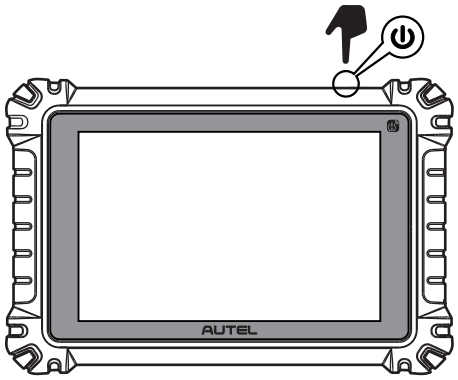

- Ensure the tablet is sufficiently charged or is connected to the supplied DC power supply.
- Power up the tablet.

3

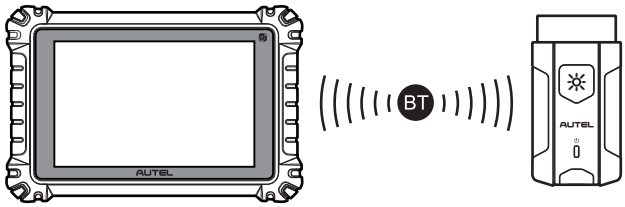

OR

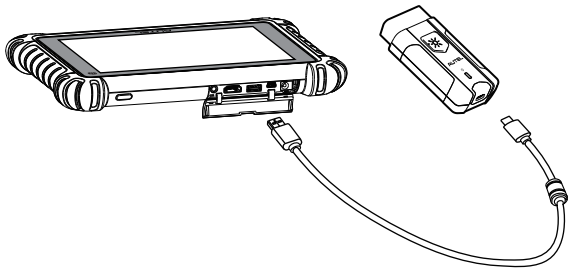

- Pair the tablet with the MaxiVCI V200 via Bluetooth to establish a communication link.

NOTE: The tablet and the MaxiVCI V200 are configured to automatically synchronize with each other on first use, so there should be no need to pair up.

Alternatively, connect the tablet and the MaxiVCI V200 using the USB cable.

4

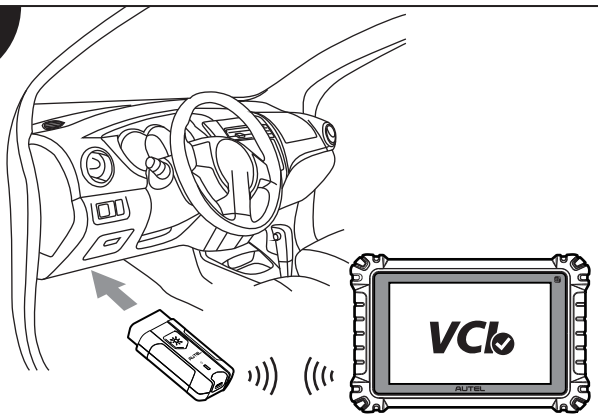

- When the MaxiVCI V200 is properly connected to the vehicle and the tablet, the VCI status button on the bottom bar of the screen will display a green badge with a check mark at the corner indicating the tablet is ready to start vehicle diagnosis.

5

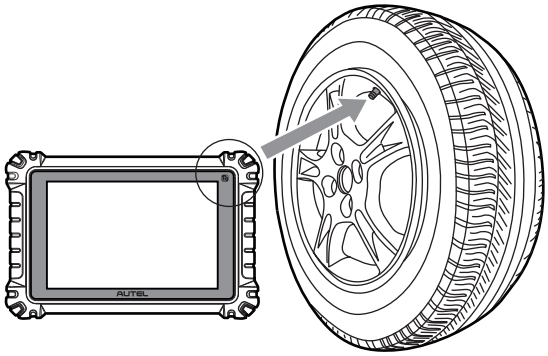

- Hold the MaxiSys MS906 Pro-TS tablet with its top right corner close to the tire sidewall at the valve stem to activate the TPMS sensor.

FCC STATEMENT :

Changes or modifications not expressly approved by the party responsible for compliance could void the user's authority to operate the equipment.
This device complies with Part 15 of the FCC Rules. Operation is subject to the following two conditions:
(1) this device may not cause harmful interference, and
(2) this device must accept any interference received, including interference that may cause undesired operation.

This transmitter must not be co-located or operating in conjunction with any other antenna or transmitter.

Note: This equipment has been tested and found to comply with the limits for a Class B digital device, pursuant to Part 15 of the FCC Rules. These limits are designed to provide reasonable protection against harmful interference in a residential installation. This equipment generates, uses, and can radiate radio frequency energy, and if not installed and used in accordance with the instructions, may cause harmful interference to radio communications. However, there is no guarantee that interference will not occur in a particular installation. If this equipment does cause harmful interference to radio or television reception, which can be determined by turning the equipment off and on, the user is encouraged to try to correct the interference by one or more of the following measures:
- Reorient or relocate the receiving antenna.
- Increase the separation between the equipment and receiver.
- Connect the equipment into an outlet on a circuit different from that to which the receiver is connected.
- Consult the dealer or an experienced radio/TV technician for help.

The device has been evaluated to meet general RF exposure requirement. The device can be used in portable exposure condition without restriction.

This equipment complies with FCC radiation exposure limits set forth for an uncontrolled environment. End user must follow the specific operating instructions for satisfying RF exposure compliance.
The device is designed to meet the requirements for exposure to radio waves established by the Federal Communications Commission (USA). These requirements set a SAR limit of 1.6 W/kg averaged over one gram of tissue. The highest SAR value reported under this standard during product certification for use when properly worn on the body is 0.632 W/kg.

IC STATEMENT :

This device contains licence-exempt transmitter(s)/receiver(s) that comply with Innovation, Science and Economic Development Canada's licence-exempt RSS(s).
Operation is subject to the following two conditions:
(1) This device may not cause interference.
(2) This device must accept any interference, including interference that may cause undesired operation of the device.
L'émetteur/récepteur exempt de licence contenu dans le présent appareil est conforme aux
CNR d'Innovation, Sciences et Développement économique Canada applicables aux appareils radio exempts de licence. L'exploitation est autorisée aux deux conditions suivantes :
1) L'appareil ne doit pas produire de brouillage;
2) L'appareil doit accepter tout brouillage radioélectrique subi, même si le brouillage est susceptible d'en compromettre le fonctionnement.

This transmitter must not be co-located or operating in conjunction with any other antenna or transmitter.
Cet émetteur ne doit pas être colocalisé ou fonctionner en conjonction avec une autre antenne ou un autre émetteur.

The device has been evaluated to meet general RF exposure requirement. The device can be used in portable exposure condition without restriction.
Le matériel a été évalué pour répondre aux exigences générales d'exposition aux radiofréquences.Le dispositif peut être utilisé dans des conditions d 'exposition portables illimitées.

The device is designed to meet the requirements for exposure to radio waves established by the Innovation, Science and Economic Development Canada's. These requirements set a SAR limit of 1.6 W/kg averaged over one gram of tissue. The highest SAR value reported under this standard during product certification for use when properly worn on the body is 0.632 W/kg.
L'appareil est con?u pour répondre aux exigences d'exposition aux ondes radio établies par l'Innovation, Sciences et Développement économique Canada. Ces exigences fixent une limite DAS de 1.6 W / kg en moyenne sur un gramme de tissu. La valeur DAS la plus élevée rapportée selon cette norme lors de la certification du produit pour une utilisation lorsqu'il est correctement porté sur le corps est 0.632W/kg.