SIEMENS

RUGGEDCOM WIN5237-IS

Preface

Introduction 1

Installing the Subscriber Unit 2

Device Management 3

Technical Specifications 4

Certification 5

Installation Guide

11/2018

RC1372-EN-04

Copyright © 2018 Siemens Canada Ltd

All rights reserved. Dissemination or reproduction of this document, or evaluation and communication of its contents, is not authorized except where expressly permitted. Violations are liable for damages. All rights reserved, particularly for the purposes of patent application or trademark registration.

This document contains proprietary information, which is protected by copyright. All rights are reserved. No part of this document may be photocopied, reproduced or translated to another language without the prior written consent of Siemens Canada Ltd.

Disclaimer Of Liability

Siemens has verified the contents of this document against the hardware and/or software described. However, deviations between the product and the documentation may exist.

Siemens shall not be liable for any errors or omissions contained herein or for consequential damages in connection with the furnishing, performance, or use of this material.

The information given in this document is reviewed regularly and any necessary corrections will be included in subsequent editions. We appreciate any suggested improvements. We reserve the right to make technical improvements without notice.

Registered Trademarks

RUGGEDCOM™ and ROS™ are trademarks of Siemens Canada Ltd.

Other designations in this manual might be trademarks whose use by third parties for their own purposes would infringe the rights of the owner.

Security Information

Siemens provides products and solutions with industrial security functions that support the secure operation of plants, machines, equipment and/or networks. They are important components in a holistic industrial security concept. With this in mind, Siemens' products and solutions undergo continuous development. Siemens recommends strongly that you regularly check for product updates.

For the secure operation of Siemens products and solutions, it is necessary to take suitable preventive action (e.g. cell protection concept) and integrate each component into a holistic, state-of-the-art industrial security concept. Third-party products that may be in use should also be considered. For more information about industrial security, visit https://www.siemens.com/industrialsecurity.

To stay informed about product updates as they occur, sign up for a product-specific newsletter. For more information, visit https://support.automation.siemens.com.

Warranty

Siemens warrants this product for a period of five (5) years from the date of purchase, conditional upon the return to factory for maintenance during the warranty term. This product contains no user-serviceable parts. Attempted service by unauthorized personnel shall render all warranties null and void. The warranties set forth in this article are exclusive and are in lieu of all other warranties, performance guarantees and conditions whether written or oral, statutory, express or implied (including all warranties and conditions of merchantability and fitness for a particular purpose, and all warranties and conditions arising from course of dealing or usage or trade). Correction of nonconformities in the manner and for the period of time provided above shall constitute the Seller's sole liability and the Customer's exclusive remedy for defective or nonconforming goods or services whether claims of the Customer are based in contract (including fundamental breach), in tort (including negligence and strict liability) or otherwise.

For warranty details, visit https://www.siemens.com/ruggedcom or contact a Siemens customer service representative.

Contacting Siemens

Address
Siemens Canada Ltd
Industry Sector
300 Applewood Crescent
Concord, Ontario
Canada, L4K 5C7

Telephone
Toll-free: 1 888 264 0006
Tel: +1 905 856 5288
Fax: +1 905 856 1995

E-mail
ruggedcom.info.i-ia@siemens.com

Web
https://www.siemens.com/ruggedcom

Table of Contents

Preface v
Alerts v
Related Documents vi
Training vi
Customer Support vi

Chapter 1
Introduction 1
1.1 Feature Highlights 2
1.2 Description 2
1.3 Required Tools and Materials 4
1.4 Decommissioning and Disposal 4

Chapter 2
Installing the Subscriber Unit 5
2.1 General Procedure 6
2.2 Unpacking the Subscriber Unit 7
2.3 Site Preparation and Precautions 7
2.4 Mounting the Subscriber Unit 8
2.4.1 Mounting the Subscriber Unit to a Wall or Tower 9
2.4.2 Mounting the Subscriber Unit to a Pole 11
2.5 Grounding the Subscriber Unit 13
2.6 Connecting Power and Data 13
2.6.1 Connecting the RUGGEDCOM WIN1010 13
2.6.2 Connecting to a RUGGEDCOM RP100 or RP110 14
2.6.3 Assembling the PoE Connector 15
2.7 Weatherproofing the Subscriber Unit 19
2.7.1 Weatherproofing a Cable 19
2.7.2 Applying Cold Shrink Tubing 20
2.7.3 Applying Self-Amalgamating Tape 20

Chapter 3
Device Management 21
3.1 Configuring the Subscriber Unit 21

Chapter 4
Technical Specifications 23
4.1 Power Consumption 23
4.2 Radio and Modem Specifications 23
4.3 Operating Environment 24
4.4 Mechanical Specifications 24
4.5 IDU to ODU Cable Specifications 24
4.6 Dimension Drawings 26

Chapter 5
Certification 27
5.1 Approvals 27
5.1.1 CSA 27
5.1.2 European Union (EU) 28
5.1.3 TÜV Rheinland 28
5.1.4 FCC 28
5.1.5 IEEE 29
5.1.6 RoHS 29
5.2 Environmental Type Tests 29

Preface

This guide describes the RUGGEDCOM WIN5237-IS. It describes the major features of the subscriber unit, installation, commissioning and important technical specifications.

It is intended for use by subscriber unit installers and operators, and assumes readers have a working knowledge of WiMAX technologies and procedures. While some safety precautions are reviewed here, it is assumed that installers are trained in safe installation practices. Users unfamiliar with safe installation procedures, WiMAX technologies, and service procedures should not rely on this manual for comprehensive guidance.

CONTENTS

- "Alerts"
- "Related Documents"
- "Training"
- "Customer Support"

Alerts

The following types of alerts are used when necessary to highlight important information.

DANGER!
DANGER alerts describe imminently hazardous situations that, if not avoided, will result in death or serious injury.

WARNING!
WARNING alerts describe hazardous situations that, if not avoided, may result in serious injury and/or equipment damage.

CAUTION!
CAUTION alerts describe hazardous situations that, if not avoided, may result in equipment damage.

IMPORTANT!
IMPORTANT alerts provide important information that should be known before performing a procedure or step, or using a feature.

NOTE
NOTE alerts provide additional information, such as facts, tips and details.

Related Documents

Other documents that may be of interest include:

- RUGGEDCOM SU User Guide [https://support.industry.siemens.com/cs/ww/en/view/109737453]
- *RUGGEDCOM RP100 Installation Guide* [https://support.industry.siemens.com/cs/ww/en/view/93146617]
- *RUGGEDCOM RP110 Installation Guide* [https://support.industry.siemens.com/cs/ww/en/view/99501283]

Training

Siemens offers a wide range of educational services ranging from in-house training of standard courses on networking, Ethernet switches and routers, to on-site customized courses tailored to the customer's needs, experience and application.

Siemens' Educational Services team thrives on providing our customers with the essential practical skills to make sure users have the right knowledge and expertise to understand the various technologies associated with critical communications network infrastructure technologies.

Siemens' unique mix of IT/Telecommunications expertise combined with domain knowledge in the utility, transportation and industrial markets, allows Siemens to provide training specific to the customer's application.

For more information about training services and course availability, visit https://www.siemens.com/ruggedcom or contact a Siemens Sales representative.

Customer Support

Customer support is available 24 hours, 7 days a week for all Siemens customers. For technical support or general information, contact Siemens Customer Support through any of the following methods:

Online

Visit http://www.siemens.com/automation/support-request to submit a Support Request (SR) or check on the status of an existing SR.

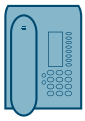

Telephone

Call a local hotline center to submit a Support Request (SR). To locate a local hotline center, visit http://www.automation.siemens.com/mcms/aspa-db/en/automation-technology/Pages/default.aspx.

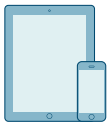

Mobile App

Install the Industry Online Support app by Siemens AG on any Android, Apple iOS or Windows mobile device and be able to:

- Access Siemens' extensive library of support documentation, including FAQs and manuals
- Submit SRs or check on the status of an existing SR
- Contact a local Siemens representative from Sales, Technical Support, Training, etc.
- Ask questions or share knowledge with fellow Siemens customers and the support community

1 Introduction

The RUGGEDCOM WIN5237-IS subscriber unit is part of the RUGGEDCOM WIN family, a line of mobile WiMAX broadband wireless access systems based on the IEEE 802.16e mobile WiMAX standard.

The RUGGEDCOM WIN5237-IS is a high-performance, self-learning subscriber. It automatically detects the base station on the best signal available, allowing for plug-and-play installation and maintenance free operation. The automatic switching and monitoring features guarantee on-going operation in changing conditions, which results in low maintenance and considerable operating expense savings.

The subscriber unit is compliant with IEEE 802.16e standards to effectively meet the unique requirements of the wireless Metropolitan Area Network (MAN) environment and to deliver broadband access services to a wide range of customers. Specifically designed for point-to-multipoint broadband wireless access applications, the subscriber unit provides efficient use of the wireless spectrum, supporting a range of user environments.

The subscriber unit also complies with the IEEE 802.16-2005 standard for the deployment of point-to-multipoint (PMP) and point-to-point (PTP) network architectures.

The subscriber unit is a WiMAX Forum IEEE 802.16e Wave 2 (MIMO) certified subscriber. Each subscriber registers and establishes a bi-directional data link with the base station.

Primary benefits offered by the RUGGEDCOM WIN5237-IS include:

- **Non-Line-of-Sight (NLOS) Propogation**
  Provides excellent performance in NLOS conditions. Mitigates multi-path and deep fading, providing extended range and easy installation.
- **Automatic Transmit Power Control (ATPC)**
  ATPC allows for optimal network deployment, tight frequency reuse, and interference avoidance.
- **Power over Ethernet (PoE)**
  Supports single cable PoE.
- **Wide Frequency Band**
  Provides support for deployments around the world.

CONTENTS

- Section 1.1, “Feature Highlights”
- Section 1.2, “Description”
- Section 1.3, “Required Tools and Materials”
- Section 1.4, “Decommissioning and Disposal”

Section 1.1

Feature Highlights

Long Range

The subscriber unit has multiple built-in receivers to improve range and Non-Line-of-Sight (NLoS) performance. The system has the ability to leverage sub-channelization technology to balance links with high-power base stations.

Robust Design

The subscriber unit is designed for mission critical applications in harsh environments with very high Mean Time Before Failure.

Quality of Service

The subscriber unit gives the user the ability to separate traffic types over the air, and guarantee latency, minimum bandwidth and jitter according to application needs.

Power Supply Options

When combined with the injector series (RUGGEDCOM RP100 or RP110), the subscriber unit offers the industry's leading power supply options with 12 VDC, 24 VDC, 48 VDC, and 88–300 VDC or 85–264 VAC available for a variety of industrial applications.

Flexibility

The subscriber unit supports both IP convergence sublayer for wireless Internet service providers or Ethernet Convergence Sublayer, ideal for mission critical private networks.

Section 1.2

Description

The RUGGEDCOM WIN5237-IS features various ports, controls and indicator LEDs on the bottom panel for connecting, configuring and troubleshooting the subscriber unit.

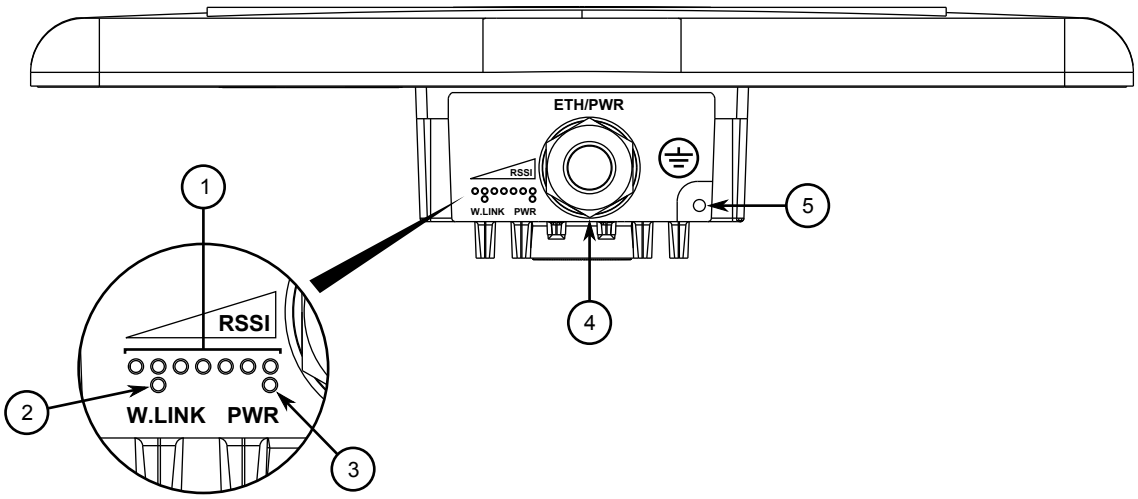

Figure 1: RUGGEDCOM WIN5237-IS

1. RSSI LEDs **2.** W.LINK LED **3.** PWR LED **4.** ETH/PWR Port **5.** Chassis Ground

RSSI LEDs

Indicates the received signal strength.

LED	RSSI Level
●○○○○○○○	< -90
●●○○○○○○	-85 to -90
●●●○○○○○	-80 to -85
●●●●○○○○	-75 to -80
●●●●●○○○	-70 to -75
●●●●●●○○	-65 to -70
●●●●●●●●	-20 to -60
○○○○○○○●	> -20

W.LINK LED

Indicates when the subscriber unit is connected with a base station.

State	Description
Green (Solid)	Subscriber unit is connected to the base station and receiving services.
Green (Blinking)	Link between the subscriber unit and the base station is down.

PWR LED

Indicates when power is supplied to the subscriber unit.

State	Description
Green	Power is on.
Off	Power is off.

ETH/PWR Port

A copper RJ45 PoE port for data and power. For more information about connecting data and power, refer to Section 2.6, “Connecting Power and Data”.

Chassis Ground Connection	Protects the subscriber unit from power surges and accumulated static electricity. For information about grounding the subscriber unit, refer to Section 2.5, "Grounding the Subscriber Unit".

Section 1.3

Required Tools and Materials

The following tools and materials are required to install the RUGGEDCOM WIN5237-IS:

Tools

- Wrench or socket set
- Phillips screwdriver
- Drill with an 8 mm (5/16 in) drill bit
- Wall anchors (if necessary)

Sprays

- Cleaner and de-greaser
- SCC3 conformal coating
- Corrosion protection

Greases

- Marine grease (for marine applications only)

Tapes

- POE cold shrink (maximum 49.2 mm or 1.9 in inner diameter before shrinking) or self-amalgamating tape
- UV-resistant vinyl tape
- Electrical insulation putty

Mounting Hardware (Wall/Tower Only)

- Four 1/4" × 1/2" HEX chipboard screws
- Four 1/4" flat washers
- Four 1/4" spring washers

Section 1.4

Decommissioning and Disposal

Proper decomissioning and disposal of this device is important to prevent malicious users from obtaining proprietary information and to protect the environment.

Decommissioning

This device may include sensitive, proprietary data. Before taking the device out of service, either permanently or for maintenance by a third-party, make sure it has been fully decommissioned.

For more information, refer to the associated *User Guide*.

Recycling and Disposal

For environmentally friendly recycling and disposal of this device and related accessories, contact a facility certified to dispose of waste electrical and electronic equipment. Recycling and disposal must be done in accordance with local regulations.

2 Installing the Subscriber Unit

This chapter describes how to install the subscriber unit, including mounting the subscriber unit, connecting power, connecting the antenna, and connecting the subscriber unit to the network.

DANGER!
Electrocution hazard – risk of serious personal injury and/or damage to equipment. Before performing any maintenance tasks, make sure all power to the subscriber unit has been disconnected and wait approximately two minutes for any remaining energy to dissipate.

DANGER!
Electrocution hazard – risk of death or serious injury. When the subscriber unit is installed in an outdoor location, all indoor components (e.g. Ethernet and power supply) should be connected through a lightning protector.

Lightning protection protects people and equipment located indoors from lightning that may strike the subscriber unit or its outdoor cables. Therefore, install the lightning protector indoors, as close as possible to the point where the cables enter the building. The lightning protector can also be installed outdoors as long as the cables that lead indoors are well protected from lightning between the protector and the building entrance.

WARNING!
Safety hazard – risk of serious personal injury and/or damage to equipment. Installing the RUGGEDCOM WIN5237-IS can pose a serious safety hazard. Be sure to take precautions to avoid the following:

- *Exposure to high voltage lines during installation*
- *Falling when working at heights or with ladders*
- *Injuries from dropping tools*
- *Contact with AC wiring (power system connection)*

IMPORTANT!
Only certified personnel should be permitted to install equipment.

IMPORTANT!
This product contains no user-serviceable parts. Attempted service by unauthorized personnel shall render all warranties null and void.

Changes or modifications not expressly approved by Siemens Canada Ltd could invalidate specifications, test results, and agency approvals, and void the user's authority to operate the equipment.

IMPORTANT!
*This product should be installed in a **restricted access location** where access can only be gained by authorized personnel who have been informed of the restrictions and any precautions that must be taken. Access must only be possible through the use of a tool, lock and key, or other means of security, and controlled by the authority responsible for the location.*

IMPORTANT!
Install equipment in accordance with the electrical code relevant to the country of installation, such as:

- *the National Electrical Code (NEC), ANSI/NFPA 70*
- *the Canadian Electrical Code (CEC), Part 1, CSA C22.1*
- *the National Electrical Safety Code IEEE C2 (when applicable)*

Unless marked or otherwise identified, the Standard for the Protection of Electronic Computer/Data Processing Equipment, ANSI/NFPA 75, also applies.

IMPORTANT!
Outdoor exposed communication lines longer than 40 m (140 ft) must be considered as TNV-1 circuits. The installer must make sure the power supply and network ports are designed for full compliance with the standards for TNV-1 telecommunication networks.

CONTENTS

- Section 2.1, “General Procedure”
- Section 2.2, “Unpacking the Subscriber Unit”
- Section 2.3, “Site Preparation and Precautions”
- Section 2.4, “Mounting the Subscriber Unit”
- Section 2.5, “Grounding the Subscriber Unit”
- Section 2.6, “Connecting Power and Data”
- Section 2.7, “Weatherproofing the Subscriber Unit”

Section 2.1

General Procedure

The general procedure for installing the subscriber unit is as follows:

1. Review the relevant certification information for any regulatory requirements. For more information, refer to Section 5.1, “Approvals”.
2. Unpack and inspect the subscriber unit components. For more information, refer to Section 2.2, “Unpacking the Subscriber Unit”.
3. Mount the subscriber unit to a pole, wall or tower. For more information, refer to Section 2.4, “Mounting the Subscriber Unit”.
4. Assemble the PoE cable. For more information, refer to Section 2.6.3, “Assembling the PoE Connector”.
5. Make sure the subscriber unit is grounded. For more information, refer to Section 2.5, “Grounding the Subscriber Unit”.

6. Connect the subscriber unit to a power source and the network. For more information, refer to Section 2.6, "Connecting Power and Data".
7. Seal all cable connections. For more information, refer to Section 2.7, "Weatherproofing the Subscriber Unit".
8. Configure the subscriber unit. For more information, refer to Section 3.1, "Configuring the Subscriber Unit".

Section 2.2

Unpacking the Subscriber Unit

The following items are included in the RUGGEDCOM WIN5237-IS package:

Item	Quantity
RUGGEDCOM WIN5237-IS Subscriber Unit	1
RUGGEDCOM WIN1010 AC Power Injector	1
Radio Frequency (RF) antenna cables, 5 m (16.4 ft) long	2
Pole/wall/tower mounting kit	1
RJ45 PoE Connector Kit	1

When unpacking the subscriber unit, do the following:

1. Inspect the package for damage before opening it.
2. Visually inspect each item in the package for any physical damage.
3. Verify all items are included.

If any item is missing or damaged, contact Siemens for assistance.

Section 2.3

Site Preparation and Precautions

Before installing the subscriber unit and or antenna(s), it is important to plan the the complete installation and make sure the appropriate safe guards are in place.

Site Selection

Consider the following recommendations when selecting an appropriate site for the subscriber unit and antenna(s):

- Mount the antenna(s) at the highest point possible. Reception will increase according to the height of the antenna(s).
- Mount the antenna(s) in a place with as few obstructions as possible between the antenna(s) and the planned service area.
- To avoid interference, mount the antenna(s) and subscriber unit as far as possible from other antenna(s) and subscriber units.
- Keep the cable from the subscriber unit to the antenna(s) as short as possible and mount the antenna(s) as close as possible to the subscriber unit. Using a cable longer than 2 m (6.6 ft) will result in greater loss and more interference, as the cable will act as an antenna itself.

- Do not point the antenna(s) directly at populated areas.
- Locate the antenna(s) at least 3.6 m (11.8 ft) from people and public areas.
- Make sure the antenna(s) and subscriber unit are easily accessible for maintenance purposes.
- Conduct a site survey to best position the subscriber unit and antenna(s) in relation to other subscriber units, antennas and base stations in the area. The site survey should also take into consideration the overall safety of the selected site

Site Survey

Most wireless networks include many subscriber/base stations installed in various locations in an overlapping radio-cell pattern. It is important to position each subscriber unit in an optimal location considering the assignment of its radio channels. Therefore, a site survey becomes an essential first step before physically deploying the subscriber unit.

The site survey should include details important to the planning of the subscriber unit deployment in each specific site, including potential mounting points for the subscriber unit and antennas, as well as the routing options for data, power and antenna cables.

For safety, always consult with the local power utility as well. It is important to select a site that not only offers maximum coverage, but is also safe for installers to work in.

Safety Precautions

When installing the subscriber unit or an antenna, make sure to adhere to the following safety precautions:

- Always install the subscriber unit with the help of a partner.
- Always use the most appropriate mounting method for the site and the equipment being installed. For assistance, contact a Siemens representative.
- Always assume an overhead line can cause serious injury or death. Note that electric power lines and phone lines look alike.
- Always wear the appropriate Personal Protective Equipment (PPE) for the task, including but not limited to rubber boots, rubber gloves, hard hat, harness and lanyard, etc.
- Always use a ladder made of a non-conductive material, such as wood or fiberglass. Do not use a metal ladder.
- Always work under favorable conditions. Do not work on wet or windy days.
- If the subscriber unit or antenna begins to drop, step away immediately and allow it to fall. The subscriber unit, cables, metal guy wires and pole (in the case of pole mount installations) are all excellent conductors. Any contact between these components and an electrical power line will complete an electrical path through the subscriber unit/antenna and the installer.
- If any part of the subscriber unit or an antenna comes in contact with an electrical power line, contact the local power utility. Do not attempt to touch or remove the component.

Section 2.4

Mounting the Subscriber Unit

The RUGGEDCOM WIN5237-IS is designed for maximum mounting and display flexibility. It can be secured to a bracket and then mounted to a pole, wall or tower.

> **NOTE**
> *For detailed dimensions of the subscriber unit, refer to Section 4.6, "Dimension Drawings".*

When choosing the mounting location for the unit, consider the available mounting structures and antenna clearance.

Site Survey

Most wireless networks include many subscriber/base stations installed in various locations in an overlapping radio-cell pattern. It is important to position each subscriber unit in an optimal location considering the assignment of its radio channels. Therefore, a site survey becomes an essential first step before physically deploying the subscriber unit.

The site survey should include details important to the planning of the subscriber unit deployment in each specific site, including potential mounting points for the subscriber unit and antennas, as well as the routing options for data, power and antenna cables.

Recommended Site Requirements

It is highly recommended the subscriber unit be mounted with as few obstructions as possible between itself and the base station. The subscriber unit should be pointed in the direction of the designated server base station. When choosing the ideal location, it is also important to take into consideration the overall area topology.

CONTENTS

- Section 2.4.1, "Mounting the Subscriber Unit to a Wall or Tower"
- Section 2.4.2, "Mounting the Subscriber Unit to a Pole"

Section 2.4.1

Mounting the Subscriber Unit to a Wall or Tower

Mount the subscriber unit to any wall or tower capable of supporting its weight. An outer wall on a roof or other high location to avoid interference from other buildings or trees is preferred.

To mount the subscriber unit to a wall or tower, do the following:

1. Attach the subscriber unit to the mounting bracket.

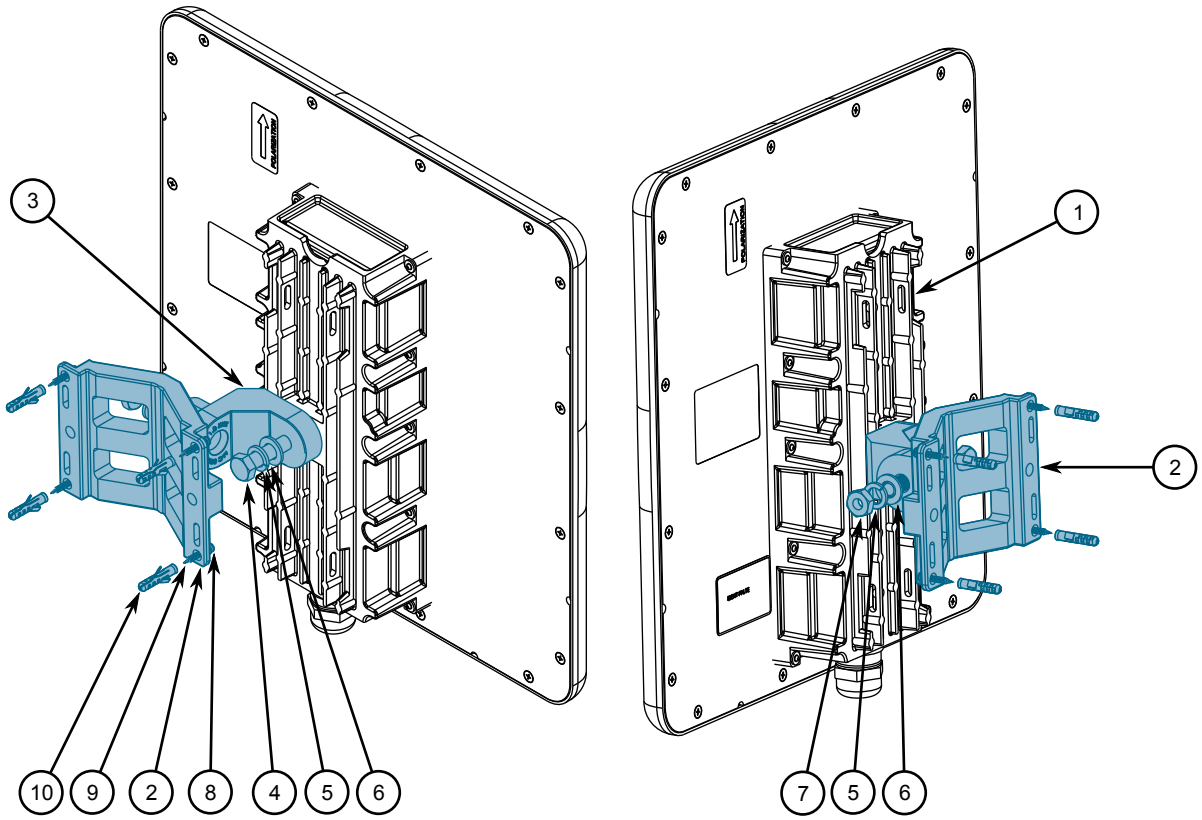

Figure 2: Mounting the Subscriber Unit to a Wall or Tower

1. Subscriber Unit **2.** Mounting Kit **3.** Wall Holder/Pole Mount **4.** M8 × 25 mm Hex Screw **5.** M8 Spring Washer **6.** M8 Flat Washer **7.** M8 Nut **8.** M5 Flat Washer **9.** NS 1/4" × 1/2" HEX Chipboard Screw **10.** Wall Anchor

2. Liberally apply an anti-corrosion spray to all galvanized steel components, including mounting brackets, washers and screws.
3. Select a mounting location on the wall.
4. Place the mounting bracket on the wall and mark four mounting holes.
5. Drill four holes and insert a wall anchor into each hole.
6. Secure the mounting bracket to the wall with four 1/4" × 1/2" HEX screws, four spring washers, and four flat washers.
7. Connect the arm bracket to the mounting bracket using a screw, spring washer, flat washer and nut. Make sure the nut is hand tight
8. Connect the subscriber unit to the arm bracket using a screw, spring washer, flat washer and nut. Make sure the nut is hand tight.
9. Point the front face of the subscriber unit in the general direction of the designated base station.
10. Make sure the **PWR LED** on the subscriber unit is on.
11. Position the subscriber unit until the maximum RSSI link quality reading is achieved. A single RSSI LED indicates the subscriber unit is at minimum synchronized with the base station. For information about the RSSI LED indicators, refer to Section 1.2, “Description”.

If the subscriber unit is not synchronized with the base station, make sure the subscriber unit is properly configured. For more information, refer to the *RUGGEDCOM WIN User Guide* for the RUGGEDCOM WIN5237-IS.

If the expected link quality still cannot be achieved, try to improve the reception quality by placing the subscriber unit at a higher point or in an alternate location.

12. Make sure the subscriber unit is properly grounded according to local standards. For more information, refer to Section 2.5, "Grounding the Subscriber Unit".
13. Tighten the screws connecting the arm bracket to the subscriber unit and mounting bracket. Make sure the screws are torqued to 24 N·m (17.7 ft. lb.).

Section 2.4.2

Mounting the Subscriber Unit to a Pole

The subscriber unit can be attached to any pipe or pole with a diameter of 44.5 to 254 mm (1.75 to 10 in).

To mount the subscriber unit to a pole, do the following:

1. Attach the subscriber unit to the mounting bracket.

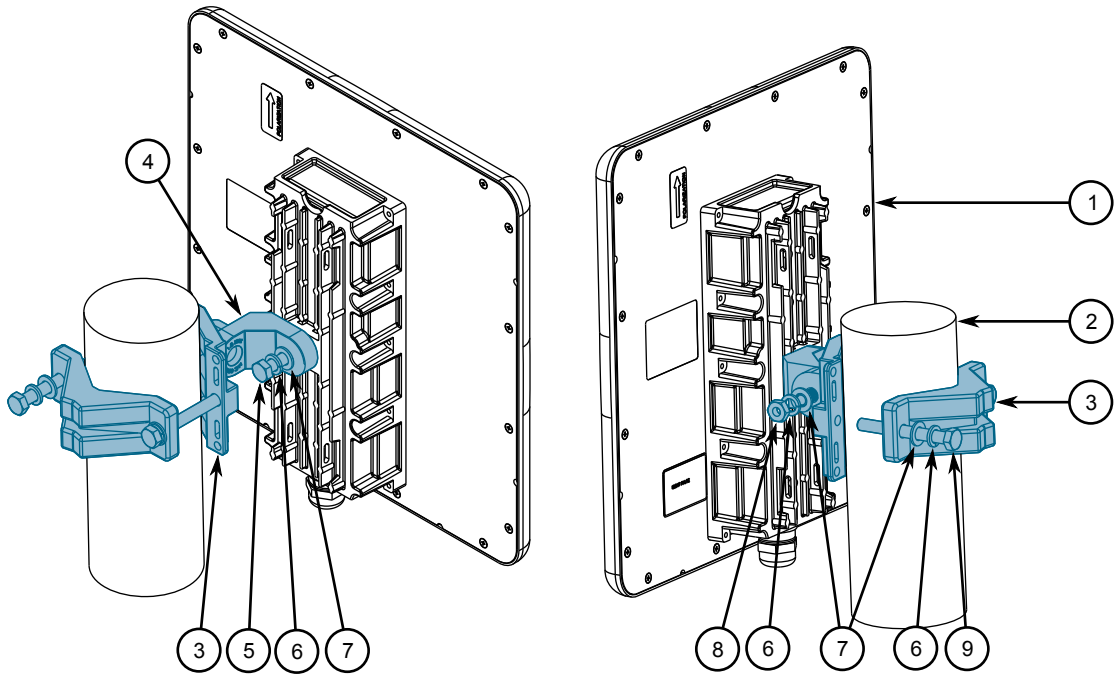

Figure 3: Mounting the Subscriber Unit to a Large Pole

1. Subscriber Unit **2.** Pole **3.** Clamping Bracket **4.** Mounting Bracket **5.** M8-25 Hex Screw **6.** M8 Spring Washer **7.** M8 Flat Washer **8.** M8 Nut **9.** M8-70 Hex Screw

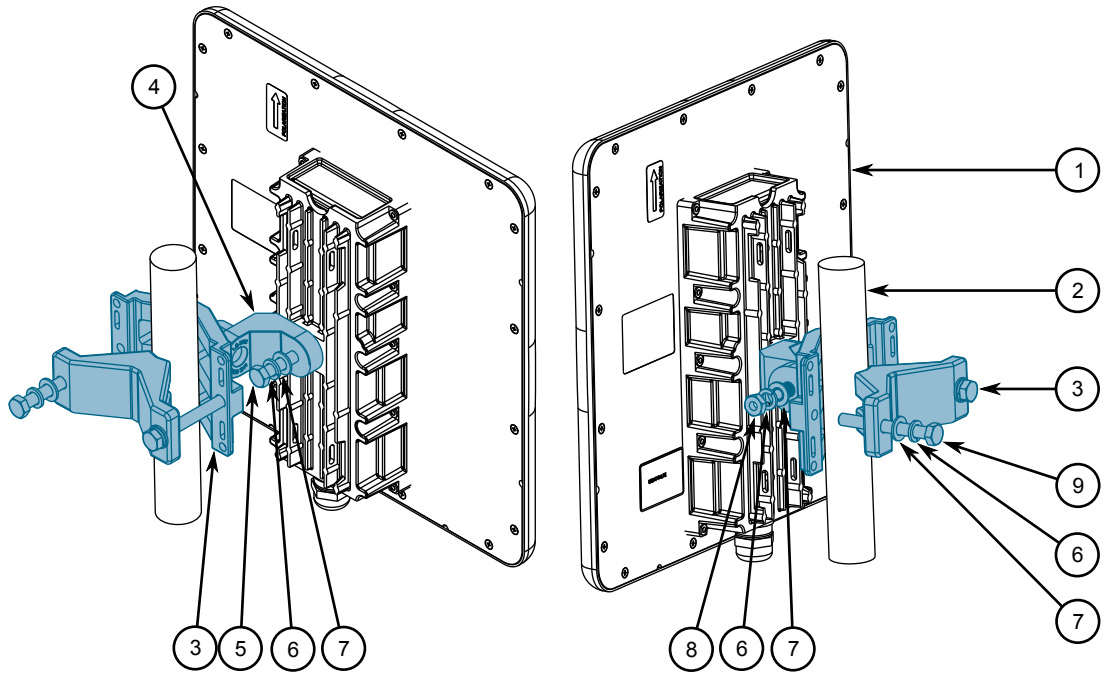

Figure 4: Mounting the Subscriber Unit to a Small Pole

1. Subscriber Unit **2.** Pole **3.** Clamping Bracket **4.** Mounting Bracket **5.** M8-25 Hex Screw **6.** M8 Spring Washer **7.** M8 Flat Washer **8.** M8 Nut **9.** M8-70 Hex Screw

2. Liberally apply an anti-corrosion spray to all galvanized steel components, including mounting brackets, nuts, washers and screws.
3. Select a mounting location on the pole.
4. Position the mounting bracket against the pole.

> **NOTE**
> *When mounting the subscriber unit, note the orientation of the clamping bracket in Figure 3 or Figure 4.*

5. Secure the clamping bracket to the mounting bracket using screws, spring washers and nuts. Make sure the screws are hand tightened.
6. Point the front face of the subscriber unit in the general direction of the designated base station.
7. Make sure the **PWR LED** on the subscriber unit is on.
8. Position the subscriber unit until the maximum RSSI link quality reading is achieved. A single RSSI LED indicates the subscriber unit is at minimum synchronized with the base station. For information about the RSSI LED indicators, refer to Section 1.2, "Description".

   If the subscriber unit is not synchronized with the base station, make sure the subscriber unit is properly configured. For more information, refer to the *RUGGEDCOM WIN SU User Guide*.

   If the expected link quality still cannot be achieved, try to improve the reception quality by placing the subscriber unit at a higher point or in an alternate location.
9. Make sure the subscriber unit is properly grounded according to local standards. For more information, refer to Section 2.5, "Grounding the Subscriber Unit".

10. Tighten the screws connecting the clamping bracket to the mounting bracket. Make sure the screws are torqued to 14 N·m (10 lbf-ft).

Section 2.5

Grounding the Subscriber Unit

When connecting the ground cable to the subscriber unit, make sure to use a 10 AWG grounding cable and torque the screw to 15 N·m (11 ft. lb.).

DANGER!
Electrocution hazard – risk of death or serious injury. The system must be properly grounded to protect against power surges and accumulated static electricity. It is the installer's responsibility to install this base station in accordance with the local electrical codes.

Section 2.6

Connecting Power and Data

The subscriber unit can be connected to one of the following Power-over-Ethernet (PoE) injectors in non-hazardous locations:

- RUGGEDCOM WIN1010 (included)
- RUGGEDCOM RP100
- RUGGEDCOM RP110

CAUTION!
Crushing hazard – risk of damage to cables. Route all power supply cables so that people cannot walk on them or place objects on or against them.

IMPORTANT!
This subscriber unit is a non-standard PoE device. Do not attempt to use a third-party PoE injector. Other types of connections or application of the subscriber unit not described in this document are strictly prohibited and may void the warranty.

CONTENTS

- Section 2.6.1, "Connecting the RUGGEDCOM WIN1010"
- Section 2.6.2, "Connecting to a RUGGEDCOM RP100 or RP110 "
- Section 2.6.3, "Assembling the PoE Connector"

Section 2.6.1

Connecting the RUGGEDCOM WIN1010

The RUGGEDCOM WIN1010 is a Power-over-Ethernet injector used to power the subscriber unit and distribute data. The injector provides RJ45 input connectors that include 10/100Base-T transceivers for connection to an IEEE

802.3 (10/100Base-T) compatible device. It receives power from a 100 to 240 VAC power source using an IEC-320-C14 industry standard connector.

CAUTION!
Electrical hazard – risk of damage to equipment. The power cord provided with the data adapter is safety certified according to national rules. Do not use a power cord that has not been approved by Siemens for use with the data adapter.

To connect power and data to the subscriber unit, do the following:

CAUTION!
Crushing hazard – risk of damage to equipment. Route all power supply cables so that people cannot walk on them or place objects on or against them. This can pinch or damage the cords.

1. Connect an indoor-to-outdoor CAT-5e cable to the Ethernet port on the injector. For information on cable requirements, refer to Section 4.5, "IDU to ODU Cable Specifications".
2. Apply the PoE connector kit to the other end of the CAT-5e cable. For more information, refer to Section 2.6.3, "Assembling the PoE Connector".
3. Connect the modified end of the cable to the *DC/ETH* port on the subscriber unit.

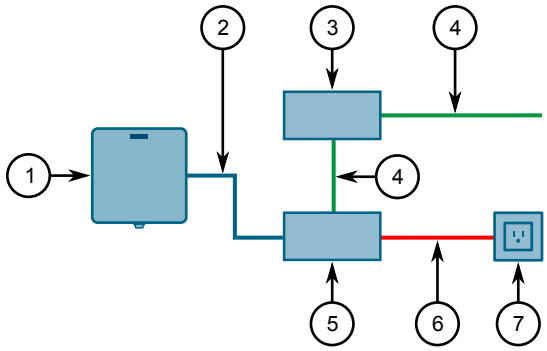

Figure 5: Connecting the RUGGEDCOM WIN1010 PoE Injector

1. Subscriber Unit **2.** PoE Cable **3.** Switch or Router **4.** Ethernet **5.** RUGGEDCOM WIN1010 **6.** AC Power Cable **7.** AC Power

4. Connect a CAT-5e cable between the RUGGEDCOM WIN1010 and a 10/100Base-T port of a switch or router.
5. Make sure all system components are properly installed and all cable connectors are securely positioned in the appropriate ports.
6. Connect the data adapter to the 110/220 VAC mains.

Section 2.6.2

Connecting to a RUGGEDCOM RP100 or RP110

The RUGGEDCOM RP100 and RP110 are optional power injectors for powering and providing data to the RUGGEDCOM WIN5237-IS. The RUGGEDCOM RP100 and RP110 meet a wider temperature and voltage range than the standardRUGGEDCOM WIN1010.

When the subscriber unit is connected to a RUGGEDCOM RP100 or RP110, make sure there is a solid connection between the lightning protector and the subscriber unit. The following illustration details a typical installation.

NOTE
A shielded cable must be used and connected to local ground at both the subscriber unit and lightning protector.

NOTE
The lightning protector must meet the necessary requirements of IEC/UL/CSA 60950-1. The clamping voltage must also be less than 60 V and the protector must not activate when the voltage is less than 56 V. For more information about these requirements, contact Siemens Customer Support.

IMPORTANT!
Install the lightning protector and the RUGGEDCOM RP100/RP110 as close as possible.

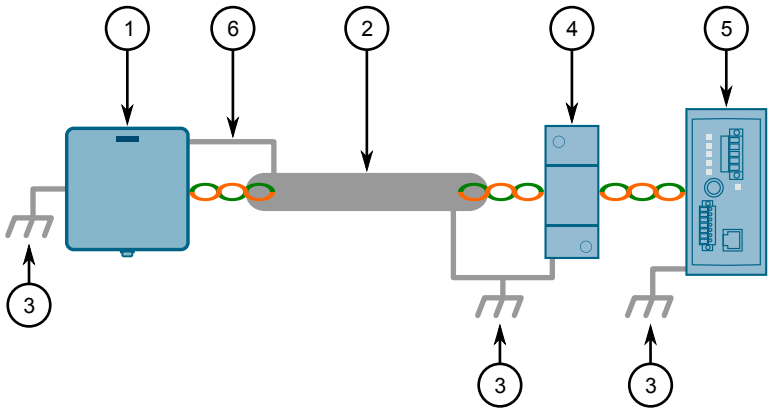

Figure 6: Typical Outdoor Installation

1. RUGGEDCOM WIN5237-IS **2.** Shielded Cable **3.** Ground Connection **4.** Lightning Protector **5.** RUGGEDCOM RP100/RP110 **6.** Drain Wire (Shielded)

For more information about the RUGGEDCOM RP100 or RP110, refer to the *RUGGEDCOM RP100 Installation Guide* or the *RUGGEDCOM RP110 Installation Guide*.

Section 2.6.3

Assembling the PoE Connector

A custom PoE cable with a special RJ45 connector is required to connect a PoE injector to the DC/ETH port. The following materials and tools are required:

- The RJ45 connector kit (included). Contains an RJ45 connector and loading bar.
- CAT-5e cable of suitable length for your application. For information on cable specifications, refer to Section 4.5, “IDU to ODU Cable Specifications”.
- Standard cable splicing tools, including a standard crimp tool.

To assemble the PoE connector, do the following:

1. Slide the connector components on to the wire.

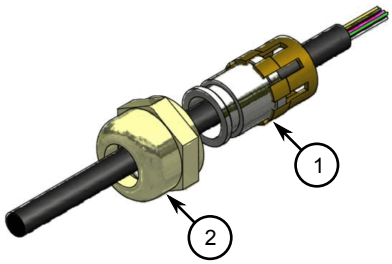

Figure 7: Assembling the Connector Components

1. Plug Housing **2.** Dust Cover

2. Strip the wire jacket 38 mm (1.5 in) from the tip, making sure not to cut the foil or drain wire.

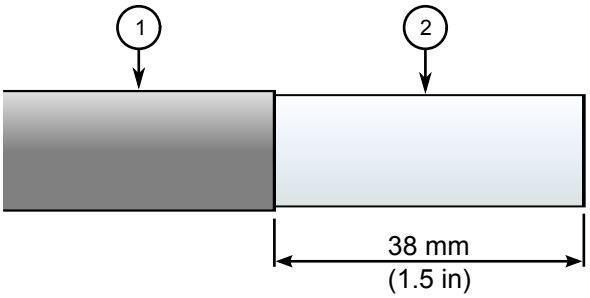

Figure 8: Cutting the Jacket

1. Wire Jacket **2.** Foil

3. Fold the foil back over the wire jacket.

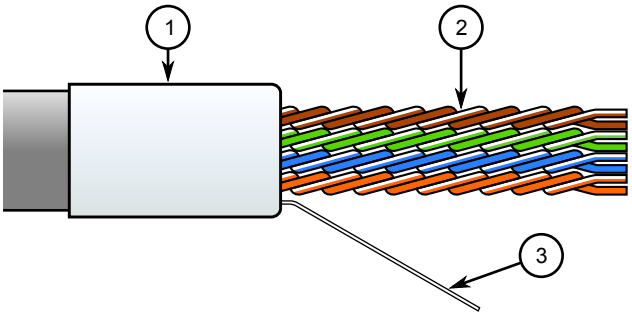

Figure 9: Folding Back the Foil

1. Foil **2.** Twisted-Pair Wires **3.** Drain Wire

4. Bend the drain wire back over the jacket.

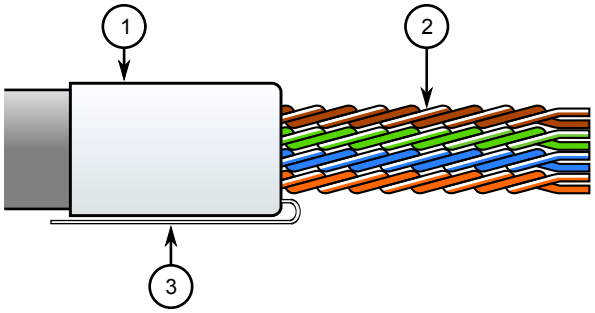

Figure 10: Bending the Drain Wire

1. Foil **2.** Drain Wire **3.** Twisted-Pair Wires

5. Partially untwist each wire pair, making sure to retain a half twist at the end.

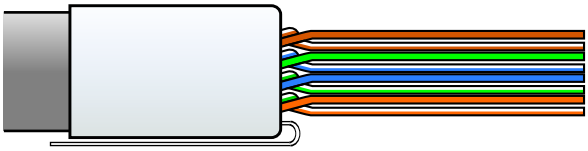

Figure 11: Untwisting the Wire Pairs

6. Arrange the wires according to the following pin-out description:

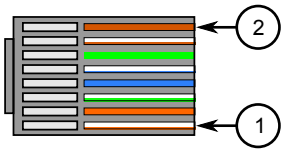

Figure 12: CAT-5e PoE Cable Pin-Out

1. Pin 1 **2.** Pin 8

Pin Number	Color	Description	
1	White/Orange	ETH Data	TP0+
2	Orange	ETH Data	TP0-
3	White/Green	ETH Data	TP1+
4	Blue	48 V	TP2+
5	White/Blue	48 V	TP2-
6	Green	ETH Data	TP1-
7	White/Brown	RTN (-)	TP3+
8	Brown	RTN (-)	TP3-

7. Slide the wires into the loading bar and then pull the loading bar down until its face is 16 mm (0.63 in) from the wire jacket. If necessary, use pliers to hold the wires while pulling the loading bar.

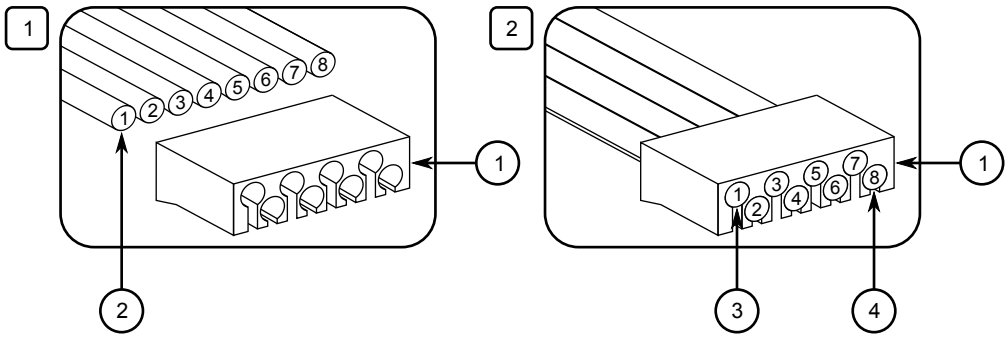

Figure 13:

1. Loading Bar **2.** Wires **3.** Pin 1 **4.** Pin 8

8. Trim the wires until they are flush with the face of the loading bar.
9. Insert the wires and loading bar into the plug body. Make sure:
   - the cable is pushed to the front of the plug body
   - the spine of the strain relief on the plug body covers the drain wire
10. Bend the strain relief until it is flat against the jacket and foil.
11. Crimp the plug and strain relief using a standard crimping tool.
12. Trim away any excess foil or drain wire extruding from the strain relief.
13. Slide the connector components up to the plug body.
14. Insert the modular plug into the plug housing.

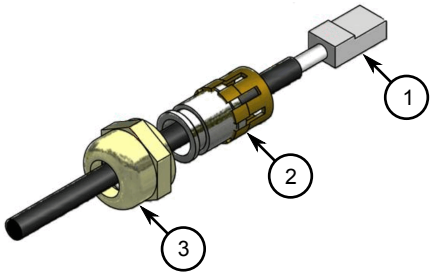

Figure 14: Assembling the Connector Components

1. PoE Plug **2.** Plug Housing **3.** Dust Cover

15. Align the latch with the LATCH slot.
16. Press the plug into the plug housing until it bottoms out.
17. While maintaining inward pressure on the plug or keeping the dust cover engaged, tighten the compression nut to 0.56 N·m (5 In-lbs).

Section 2.7

Weatherproofing the Subscriber Unit

Most outdoor subscriber unit, antenna and cable problems are caused by coaxial cable connections loosened by vibration, allowing moisture to penetrate the connector interface. Siemens strongly recommends weatherproofing *all* outdoor cable connections to prevent the ingress of water and help secure connections.

Since PoE cables also carry DC current, the need for proper weatherproofing cannot be overstated.

Use cold shrink tubing or self-amalgamating tape, as well as UV-resistant tape and electrical insulation putty to seal connections.

IMPORTANT!
Warranty is void if the subscriber unit is assembled without waterproof sealing or if the sealing is removed from the connections.

IMPORTANT!
*The method of weatherproofing described in this section must be completed on **all** external connections. If surge arrestors are used, all associated connections and arrestors must be completely wrapped with splicing tape or self-amalgamating tape.*

CONTENTS

- Section 2.7.1, “Weatherproofing a Cable”
- Section 2.7.2, “Applying Cold Shrink Tubing”
- Section 2.7.3, “Applying Self-Amalgamating Tape”

Section 2.7.1

Weatherproofing a Cable

To weatherproof a cable, do the following:

IMPORTANT!
PVC tape, silicon sealant and glue are not recommended for weatherproofing, as these materials are difficult to apply accurately and are difficult to remove.

1. Spray the cable end and connector with a cleaner and de-greaser, making sure to remove any excess with a clean lint-free cloth.
2. Spray the cable end and connector with SCC3 conformal coating and allow them to dry fully (approximately 3 to 5 minutes depending on the ambient temperature).
3. Apply cold shrink or self-amalgamating tape to the connector end. For information about how to apply these types of seals, refer to Section 2.7.2, “Applying Cold Shrink Tubing” or Section 2.7.3, “Applying Self-Amalgamating Tape”.
4. Apply two layers of UV-resistant vinyl tape to the cable ends.
5. Apply electrical insulation putty around the very end of the cable to form a seal between it and the base station.

6. If the subscriber unit is installed in a marine environment (e.g. wind farm substation, coastal tower, or marine vessel) apply a coating of marine grease to all galvanized steel components, including mounting brackets, nuts, washers and screws. This is in addition to the anti-corrosion spray applied during the mounting process.

> **IMPORTANT!**
> *Should a cable need to be replaced, make sure all surfaces are thoroughly cleaned with a cleaner and de-greaser spray before connecting the new cable. No residue from the previous weatherproofing materials should be evident on the connector or the subscriber unit chassis.*

Section 2.7.2

Applying Cold Shrink Tubing

To apply cold shrink tubing to a cable end, do the following:

1. Disconnect the cable and slide the tube over the connector end.
2. Reconnect the cable and slide the tube up to meet the subscriber unit chassis.
3. Hold the tube against the subscriber unit chassis and start rotating it clockwise while gently pulling out the core. Stop rotating once the front end of the cold shrink has begun to form around the cable end.
4. Continue to remove the core in a counter-clockwise direction until it is completely removed.

Section 2.7.3

Applying Self-Amalgamating Tape

To apply self-amalgamating (or self-fusing) tape to a cable end, do the following:

> **IMPORTANT!**
> *When applying self-amalgamating tape, make sure to stretch it to 2/3 of its original width to form a tight seal.*

1. Cut a strip of self-amalgamating tape approximately 50 cm (19.7 in) long.
2. Apply one end of the tape to the cable end and tightly wrap it around the cable once fully, making sure the tape overlaps.
3. Tightly wrap the remainder of the tape down the cable, making sure the tape overlaps with each pass.
4. Repeat the previous steps to apply a second layer of tape.

3 Device Management

This section describes how to connect to and manage the subscriber unit.

CONTENTS

- Section 3.1, “Configuring the Subscriber Unit”

Section 3.1

Configuring the Subscriber Unit

Once the subscriber unit is installed and connected to the network, it must be configured. The RUGGEDCOM WIN5237-IS features a Web-based User Interface (UI) for all configuration management. For more information about configuring the subscriber unit, refer to the *RUGGEDCOM WIN Subscriber Unit User Guide* associated with the subscriber unit and the installed software release.

4 Technical Specifications

This section provides important technical specifications related to the subscriber unit.

CONTENTS

- Section 4.1, “Power Consumption”
- Section 4.2, “Radio and Modem Specifications”
- Section 4.3, “Operating Environment”
- Section 4.4, “Mechanical Specifications”
- Section 4.5, “IDU to ODU Cable Specifications”
- Section 4.6, “Dimension Drawings”

Section 4.1

Power Consumption

Typical Power Consumption	12 W

Section 4.2

Radio and Modem Specifications

Operating Frequency	3600 to 3800 MHz
Wireless Communication Standard	IEEE 802.16e-2009
Operating Mode	Time-Division Duplexing (TDD)
Channel Bandwidths	3.5 MHz 5 MHz 7 MHz 10 MHz
Frequency Resolution	250 kHz
Transmission Mode for MIMO	MRC/STC (downlink)
Antenna Type	Integrated directional dual slant
Maximum Transmit Power	0.5 W
Output Power (Average)	18 dBm

Transmit Power Level (Adjustable)	54 dB
Size of Fast Fourier Transform (FFT) Channels	1024/512FFT
Type of Modulation	QPSK, 16-QAM, 64-QAM
Dynamic Range (Receiver)	-20 to 100 dBm
Dynamic Range (Transmitter)	-20 to 27 dBm

Section 4.3

Operating Environment

The RUGGEDCOM WIN5237-IS is rated to operate under the following environmental conditions.

Ambient Operating Temperature[a]	-40 to 75 °C (-40 to 167 °F)
Ambient Storage Temperature	-40 to 75 °C (-40 to 167 °F)
Ambient Relative Humidity[b]	5% to 95%
Maximum Altitude	2000 m (6562 ft)

[a] *Measured from a 30 cm (12 in) radius surrounding the center of the enclosure*

[b] *Non-condensing*

Section 4.4

Mechanical Specifications

Weight	1.5 kg (3.3 lb)
Ingress Protection	IP67
Enclosure	Aluminum

Section 4.5

IDU to ODU Cable Specifications

IDU to ODU Cable

Applications	Outdoor installations, fixed or portable installations, digital distribution frames in transmission stations, outdoor installations in harsh environments.
General Construction	Custom made cable designed specially for wireless systems, meeting the requirements of Cat. 5e per ANSI/TIA/EIA-568-B.2 and IEC 61156-5. The cable contains 4 twisted pairs, cabled, foil-tape shielded and jacketed with two special black UV resistant, flame retardant PVC compounds for direct outdoor use in harsh electrical environments. The diameter of the inner core complies with RJ45 connecting hardware allowing direct connection to equipment without patch cords.

Conductor Size	0.52 mm
Outer Jacket Material	UV resistant FR-PVC
Outer Diameter	7.9 mm (0.31 in) nominal
Weight	68.0 kg/km

IDU to ODU Cable Design and Materials

Conductor Material	Bare Copper
Conductor Size	24 AWG
Insulation Material	Solid PO
Insulation O.D.	1.07 mm (0.04 in)
Color Code	Per TIA/EIA 568-B
Overall Foil Shield	Yes
Overall Shield Material	Aluminum/Polyester Foil
Overall Foil Design	100% Coverage
Overall Drain-wire Material	Tinned Copper
Overall Drain-wire Size	24 AWG
Overall Drain-wire Construction	Stranded
Inner Jacket Material	UV resistant FR-PVC
Inner Jacket Diameter	6.1 mm (0.24 in)
Total Number of Wires	8

IDU to ODU Cable Standards

Flammability Rating	IEC 60332, UL1581 VW-1
Standards	IEC 61156, TIA/EIA-568

IDU to ODU Cable Performance

Frequency Range	1 to 100 MHz
Impedance	100 Ω
DC Resistance	93 Ω/km nominal
Maximum DC Resistance	95 Ω/km @ 20 °C
Capacitance Unbalance	1.6 pF/m maximum
Velocity of Propagation	68% nominal
Propagation Delay Skew	35 ns/100 m maximum
Dielectric Strength	700 V/minute

Dielectric Strength to Shield	700 V/minute
Minimum Bend Radius	70 mm (2.8 in)
Operating Temperature Range	-40 to 70 °C (-40 to 158 °F)

Section 4.6

Dimension Drawings

NOTE
All dimensions are in millimeters, unless otherwise stated.

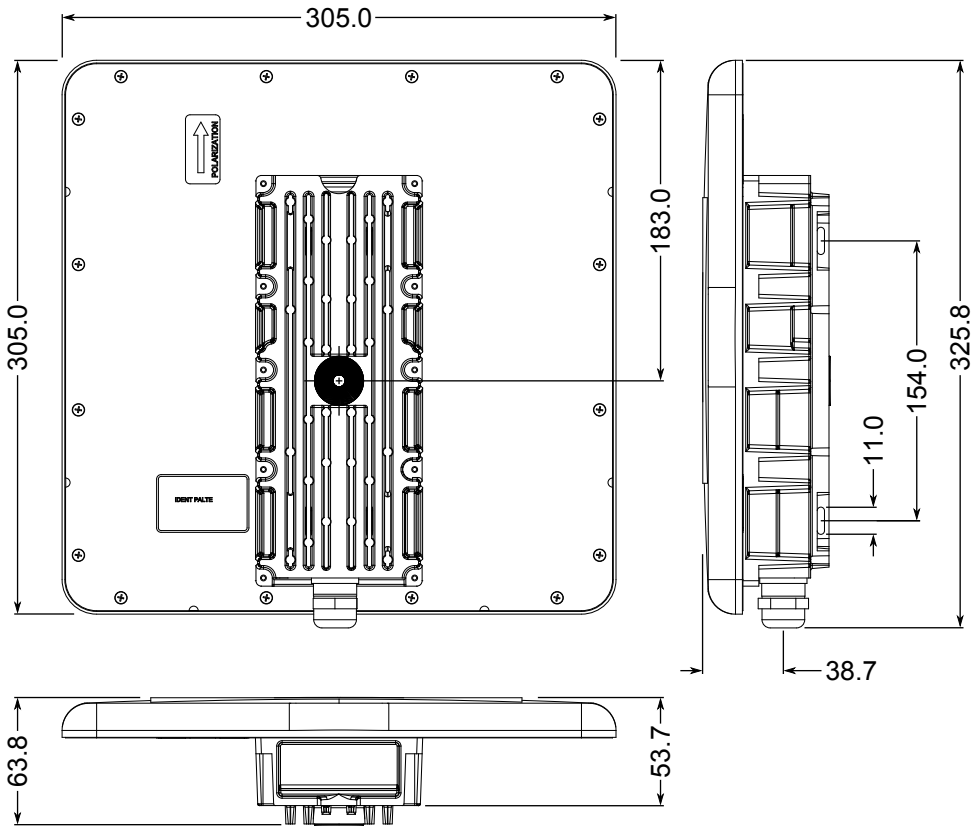

Figure 15: Overall Dimensions

5 Certification

The RUGGEDCOM WIN5237-IS ODU SU has been thoroughly tested to guarantee its conformance with recognized standards and has received approval from recognized regulatory agencies.

CONTENTS

- Section 5.1, “Approvals”
- Section 5.2, “Environmental Type Tests”

Section 5.1

Approvals

This section details the standards to which the RUGGEDCOM WIN5237-IS complies.

CONTENTS

- Section 5.1.1, “CSA”
- Section 5.1.2, “European Union (EU)”
- Section 5.1.3, “TÜV Rheinland”
- Section 5.1.4, “FCC”
- Section 5.1.5, “IEEE”
- Section 5.1.6, “RoHS”

Section 5.1.1

CSA

This subscriber unit meets the requirements of the following Canadian Standards Association (CSA) standards:

- **CAN/CSA-C22.2 No. 60950-1-07+A1:2011+A2:2014**
  Information Technology Equipment – Safety – Part 1: General Requirements (Bi-National Standard, with UL 60950-1)
- **CAN/CSA-C22.2 No. 60950-22-07+GI1:2012**
  Information Technology Equipment – Safety – Part 22: Equipment to be Installed Outdoors (Bi-National standard, with UL 60950-22)

Section 5.1.2

European Union (EU)

This subscriber unit is declared by Siemens Canada Ltd to comply with essential requirements and other relevant provisions of the following EU directives:

- **IEC/EN 60950-1**
  Information Technology Equipment – Safety – Part 1: General Requirements

Section 5.1.3

TÜV Rheinland

This subscriber unit is certified by TÜV Rheinland to meet the requirements of the following standards:

- **UL 60950-1:2007 R10.14**
  Information Technology Equipment – Safety – Part 1: General Requirements
- **UL 60950-22:2007 R12.11**
  Information Technology Equipment – Safety – Part 22: Equipment to be Installed Outdoors

The subscriber unit is marked with a TÜV Rheinland marking and can be used throughout the European community.

A copy of the TÜV Rheinland Declaration of Conformity is available from Siemens Canada Ltd. For contact information, refer to "Contacting Siemens".

Section 5.1.4

FCC

This device has been tested and found to comply with the limits for a Class B digital device, pursuant to Part 15 Subpart B , Part 90, and Part 96 of the FCC Rules. These limits are designed to provide reasonable protection against harmful interference when the device is operated in a commercial environment.

This device generates, uses and can radiate radio frequency energy and, if not installed and used in accordance with the instruction manual, may cause harmful interference to radio communications. However, there is no guarantee that interference will not occur in a particular installation. If this device does cause harmful interference to radio or television reception, which can be determined by turning the device off and on, the user is encouraged to try to correct the interference by one or more of the following measures:

- Reorient or relocate the receiving antenna
- Increase the separation between the device and receiver.
- Connect the device into an outlet on a circuit different from that to which the receiver is connected
- Contact Siemens Customer Support for assistance

IMPORTANT!
Changes or modifications not expressly approved by the party responsible for compliance could void the user's authority to operate this device.

Section 5.1.5
IEEE

This subscriber unit complies with the Mobile WiMAX Forum Wave 2 requirements defined by the following Institute of Electrical and Electronics Engineers (IEEE) standards:

- **IEEE 802.16-2005**
  IEEE Standard for Local and Metropolitan Area Networks – Part 16: Air Interface for Fixed and Mobile Broadband Wireless Access Systems – Amendment for Physical and Medium Access Control Layers for Combined Fixed and Mobile Operation in Licensed Bands

Section 5.1.6
RoHS

This device is declared by Siemens Canada Ltd to meet the requirements of the following RoHS (Restriction of Hazardous Substances) directives for the restricted use of certain hazardous substances in electrical and electronic equipment:

- **China RoHS 2**
  Administrative Measure on the Control of Pollution Caused by Electronic Information Products

A copy of the Material Declaration is available online at https://support.industry.siemens.com/cs/ww/en/view/109738831.

Section 5.2
Environmental Type Tests

The RUGGEDCOM WIN5237-IS has passed the following environmental tests.

Test	Description	Test Levels
IEC 60068-2-1	Low Temperature	-25 °C for 72 hours -40 °C (-40 °F) for 16 hours -40 °C (-40 °F) for 72 hours
IEC 60068-2-2	High Temperature	55 °C (131 °F) for 72 hours 60 °C (140 °F) for 16 hours 70 °C (158 °F) for 72 hours
IEC 60068-2-11 MIL-STD-810F 509.4	Salt Fog	5% NaCl 35° 48h
IEC 60068-2-14	Temperature Change	-10 to 45 °C (14 to 113 °F) @ 0.5 °C/min (0.9 °F/min) for 2 cycles -40 to -30 °C (-40 to -22 °F) @ 1 °C/min (1.8 °F/min) for 5 cycles
IEC 60068-2-18	Water (Rain, Intensity)	0.01 m^3/min (0.35 ft^3/min @ 90 kPa (13 PSI) for 30 minutes

Test	Description	Test Levels
IEC 529 (IP65/IP67)	Water (Rain)	0.01 m^3/min @ 90 kPa (13 PSI) for 15 minutes
IEC 60068-2-6	Sine Vibration	Velocity: 5 mm/s Displacement: 1.5 mm Acceleration: 2 m/s^2 Frequency Range: 5 to 62 Hz, 62 to 200 Hz 3 Axes Duration: 3x5 sweep
IEC 60068-2-64	Random Vibration (Class 4M5)	ASD: 0.04 m^2/s^3 12 to 12 dB/oct Frequency Range: 5 to 10 Hz, 10 to 50, 50 to 100 Hz 3 axes, 30 min per axes
	Random Vibration	ASD: 1 m^2/s^3 -3 dB/oct Frequency Range: 5 to 20 Hz, 20 to 200 Hz 3 axes, 30 min per axes
IEC 60068-2-29	Shock (Class 4M5)	Spectrum: Half sine Duration: 11 ms Accelerator: 50 m/s^2 100 shocks in each direction
	Shock	Spectrum: Half sine Duration: 6 ms Accelerator: 180 m/s^2 100 shocks in each direction
IEC 60068-2-32 Nebs: GR63	Free Fall	Height: 1 m (3.3 ft) One fall on 3 faces, 3 edges and 4 corners
IEC 60068-2-30	Humidity (Cycling)	30 °C (86 °F) @ 90 to 100% for 2 cycles
		40 °C (104 °F) @ 90 to 100% for 2 cycles