ELECTROMAGNETIC EMISSIONS COMPLIANCE REPORT

FCC Applicant:	ID TECH 10721 Walker Street, Cypress, California 90630, United States Of America
IC Applicant:	ID TECH 10721 Walker Street, Cypress, California 90630, United States Of America
FCC Manufacturer:	ID TECH TAIWAN No. 16, Lane 22, GaoQing Rd., YanMei Dist., TaoYuan City 326, Taiwan
IC Manufacturer:	ID TECH 10721 Walker Street, Cypress, California 90630, United States Of America
Product Name:	Kiosk V
Brand Name:	IDTECH
Model No.:	Kiosk V
Model Difference:	N/A
Report Number:	TERF2206000844E2
FCC ID	WQJ-KIOSKV
IC:	9847A-KIOSKV
Date of EUT Received:	June 08, 2022
Date of Test:	June 22, 2022～June 23, 2022
Issue Date:	October 27, 2022

Approved By Arno Hsieh

Arno Hsieh

We hereby certify that:

The above equipment was tested by SGS Taiwan Ltd. Central RF Lab The test data, data evaluation, test procedures, and equipment configurations shown in this report were made in accordance with the procedures given in ANSI C63.10:2013 and the energy emitted by the sample EUT comply with FCC rule part §15.225 and ISED RSS 210.

The results of this report relate only to the sample identified in this report.

Unless otherwise stated the results shown in this test report refer only to the sample(s) tested and such sample(s) are retained for 90 days only.
除非另有說明，此報告結果僅對測試之樣品負責，同時此樣品僅保留90天。本報告未經本公司書面許可，不可部份複製。
This document is issued by the Company subject to its General Conditions of Service printed overleaf, available on request or accessible at http://www.sgs.com.tw/Terms-and-Conditions and for electronic format documents, subject to Terms and Conditions for Electronic Documents at http://www.sgs.com.tw/Terms-and-Conditions. Attention is drawn to the limitation of liability, indemnification and jurisdiction issues defined therein. Any holder of this document is advised that information contained hereon reflects the Company's findings at the time of its intervention only and within the limits of Client's instructions, if any. The Company's sole responsibility is to its Client and this document does not exonerate parties to a transaction from exercising all their rights and obligations under the transaction documents. This document cannot be reproduced except in full, without prior written approval of the Company. Any unauthorized alteration, forgery or falsification of the content or appearance of this document is unlawful and offenders may be prosecuted to the fullest extent of the law.

Revision History

Report Number	Revision	Description	Issue Date	Revised By	Remark
TERF2206000844E2	00	Original.	July 08, 2022	Winnie Huang	
TERF2206000844E2	01	Correct the antenna type	August 30, 2022	Winnie Huang	*
TERF2206000844E2	02	Correct the model no.	September 02, 2022	Winnie Huang	
TERF2206000844E2	03	Update ISED standard	September 26, 2022	Winnie Huang	
TERF2206000844E2	04	1. Update FCC, IC applicant and manufacturer information 2. Remove test software	October 24, 2022	Susan Lin	*
TERF2206000844E2	05	Update section 1.3	October 27, 2022	Susan Lin	*

Note:

1、 The remark "*" indicates modification of the report upon requests from certification body.

Unless otherwise stated the results shown in this test report refer only to the sample(s) tested and such sample(s) are retained for 90 days only.
除非另有說明，此報告結果僅對測試之樣品負責，同時此樣品僅保留90天。本報告未經本公司書面許可，不可部份複製。
This document is issued by the Company subject to its General Conditions of Service printed overleaf, available on request or accessible at http://www.sgs.com.tw/Terms-and-Conditions and for electronic format documents, subject to Terms and Conditions for Electronic Documents at http://www.sgs.com.tw/Terms-and-Conditions. Attention is drawn to the limitation of liability, indemnification and jurisdiction issues defined therein. Any holder of this document is advised that information contained hereon reflects the Company's findings at the time of its intervention only and within the limits of Client's instructions, if any. The Company's sole responsibility is to its Client and this document does not exonerate parties to a transaction from exercising all their rights and obligations under the transaction documents. This document cannot be reproduced except in full, without prior written approval of the Company. Any unauthorized alteration, forgery or falsification of the content or appearance of this document is unlawful and offenders may be prosecuted to the fullest extent of the law.

Table of Contents

1 GENERAL INFORMATION 4
2 SYSTEM TEST CONFIGURATION 6
3 SUMMARY OF TEST RESULTS 8
4 DESCRIPTION OF TEST MODES 9
5 MEASUREMENT UNCERTAINTY 10
6 MEASUREMENT EQUIPMENT USED 11
7 CONDUCTED EMISSIONS TEST 12
8 RADIATED EMISSION TEST 17
9 FREQUENCY STABILITY 27
10 EMISSION BANDWIDTH MEASUREMENT 30
11 ANTENNA REQUIREMENT 33

Unless otherwise stated the results shown in this test report refer only to the sample(s) tested and such sample(s) are retained for 90 days only.
除非另有說明，此報告結果僅對測試之樣品負責，同時此樣品僅保留90天。本報告未經本公司書面許可，不可部份複製。
This document is issued by the Company subject to its General Conditions of Service printed overleaf, available on request or accessible at http://www.sgs.com.tw/Terms-and-Conditions and for electronic format documents, subject to Terms and Conditions for Electronic Documents at http://www.sgs.com.tw/Terms-and-Conditions. Attention is drawn to the limitation of liability, indemnification and jurisdiction issues defined therein. Any holder of this document is advised that information contained hereon reflects the Company's findings at the time of its intervention only and within the limits of Client's instructions, if any. The Company's sole responsibility is to its Client and this document does not exonerate parties to a transaction from exercising all their rights and obligations under the transaction documents. This document cannot be reproduced except in full, without prior written approval of the Company. Any unauthorized alteration, forgery or falsification of the content or appearance of this document is unlawful and offenders may be prosecuted to the fullest extent of the law.

1 GENERAL INFORMATION

1.1 Product Description

Product Name:	Kiosk V
Brand Name:	IDTECH
Model No.:	Kiosk V
Model Difference:	N/A
Hardware Version:	A
Firmware Version:	v1.00
EUT Series No.:	218K000053
Power Supply:	5 Vdc

1.2 RF specification

Radio Technology:	NFC
Operating Frequency	13.56MHz
Transmit Power	< 42.58 dBuV/m at 30m.
Number of Channels	1
Modulation Type	ASK
Antenna Type	Loop Antenna

Note: Antenna information is provided by the applicant.

Unless otherwise stated the results shown in this test report refer only to the sample(s) tested and such sample(s) are retained for 90 days only.
除非另有說明，此報告結果僅對測試之樣品負責，同時此樣品僅保留90天。本報告未經本公司書面許可，不可部份複製。
This document is issued by the Company subject to its General Conditions of Service printed overleaf, available on request or accessible at http://www.sgs.com.tw/Terms-and-Conditions and for electronic format documents, subject to Terms and Conditions for Electronic Documents at http://www.sgs.com.tw/Terms-and-Conditions. Attention is drawn to the limitation of liability, indemnification and jurisdiction issues defined therein. Any holder of this document is advised that information contained hereon reflects the Company's findings at the time of its intervention only and within the limits of Client's instructions, if any. The Company's sole responsibility is to its Client and this document does not exonerate parties to a transaction from exercising all their rights and obligations under the transaction documents. This document cannot be reproduced except in full, without prior written approval of the Company. Any unauthorized alteration, forgery or falsification of the content or appearance of this document is unlawful and offenders may be prosecuted to the fullest extent of the law.

1.3 Test Methodology

FCC Part 15, Subpart C §15.225

ANSI C63.10:2013.

RSS-210 issue 10 December 2019

RSS-Gen, Issue 5 April 2018

1.4 Test Facility

Laboratory	Test Site Address	Test Site Name	FCC Designation number	IC CAB identifier
SGS Taiwan Ltd. Central RF Lab. (TAF code 3702)	No.134, Wu Kung Road, New Taipei Industrial Park, Wuku District, New Taipei City, Taiwan.	SAC 1	TW0027	TW3702
		SAC 3		
		Conduction 1		
		Conducted 1		
		Conducted 2		
		Conducted 3		
		Conducted 4		
		Conducted 5		
		Conducted 6		
	No.2, Keji 1st Rd., Guishan District, Taoyuan City, Taiwan 333	Conduction C	TW0028	
		SAC C		
		SAC D		
		SAC G		
		Conducted A		
		Conducted B		
		Conducted C		
		Conducted D		
		Conducted E		
		Conducted F		
		Conducted G		

Note: Test site name is remarked on the equipment list in each section of this report as an indication where measurements occurred in specific test site and address.

1.5 Special Accessories

There is no other accessory attached. This is the worst case condition.

1.6 Equipment Modifications

There was no modification incorporated into the EUT.

Unless otherwise stated the results shown in this test report refer only to the sample(s) tested and such sample(s) are retained for 90 days only.
除非另有說明，此報告結果僅對測試之樣品負責，同時此樣品僅保留90天。本報告未經本公司書面許可，不可部份複製。
This document is issued by the Company subject to its General Conditions of Service printed overleaf, available on request or accessible at http://www.sgs.com.tw/Terms-and-Conditions and for electronic format documents, subject to Terms and Conditions for Electronic Documents at http://www.sgs.com.tw/Terms-and-Conditions. Attention is drawn to the limitation of liability, indemnification and jurisdiction issues defined therein. Any holder of this document is advised that information contained hereon reflects the Company's findings at the time of its intervention only and within the limits of Client's instructions, if any. The Company's sole responsibility is to its Client and this document does not exonerate parties to a transaction from exercising all their rights and obligations under the transaction documents. This document cannot be reproduced except in full, without prior written approval of the Company. Any unauthorized alteration, forgery or falsification of the content or appearance of this document is unlawful and offenders may be prosecuted to the fullest extent of the law.

2 SYSTEM TEST CONFIGURATION

2.1 EUT Configuration

The EUT configuration for testing is installed on RF field strength measurement to meet the Commissions requirement and operating in a manner which intends to maximize its emission characteristics in a continuous normal application.

2.2 EUT Exercise

The Transmitter was operated in the normal operating mode. The Tx frequency was fixed which was for the purpose of the measurements.

2.3 Test Procedure

2.3.1 Conducted Emissions

The EUT is a placed on a table which is 0.8 m above ground plane. Conducted emissions from the EUT measured in the frequency range between 0.15 MHz and 30MHz. The CISPR Quasi-Peak and Average detector mode is employed. The two LISNs provide 50uH/50 ohm of coupling impedance for the measuring instrument. Both lines of the power mains connected to the EUT were checked for maximum conducted interference.

2.3.2 Radiated Emissions

The EUT is a placed on a turn table. For emissions testing at or below 1 GHz, the table height shall be 0.8 m above the reference ground plane. For emission measurements above 1 GHz, the table height shall be 1.5 m. The turn table shall rotate 360 degrees to determine the position of maximum emission level. EUT is set 3m away from the receiving antenna which varied from 1m to 4m to find out the highest emission. And also, each emission was to be maximized by changing the polarization of receiving antenna both horizontal and vertical. In order to find out the max. emission, the relative positions of this transmitter (EUT) was rotated through three orthogonal axes and measurement procedures for electric field radiated emissions above 1 GHz the EUT measurement is to be made “while keeping the antenna in the ‘cone of radiation’ from that area and pointed at the area both in azimuth and elevation, with polarization oriented for maximum response.” is still within the 3dB illumination BW of the measurement antenna.

2.3.3 Radiated Emission Test Sites For Measurements From 9 kHz To 30 MHz

Radiated emission below 30MHz is measured in a 9m*6m*6m semi-anechoic chamber, the measurements correspond to those obtained at an open-field test site.
There is a comparison data of both open-field test site and semi-Anechoic chamber, and the result came out very similar.

Unless otherwise stated the results shown in this test report refer only to the sample(s) tested and such sample(s) are retained for 90 days only.
除非另有說明，此報告結果僅對測試之樣品負責，同時此樣品僅保留90天。本報告未經本公司書面許可，不可部份複製。
This document is issued by the Company subject to its General Conditions of Service printed overleaf, available on request or accessible at http://www.sgs.com.tw/Terms-and-Conditions and for electronic format documents, subject to Terms and Conditions for Electronic Documents at http://www.sgs.com.tw/Terms-and-Conditions. Attention is drawn to the limitation of liability, indemnification and jurisdiction issues defined therein. Any holder of this document is advised that information contained hereon reflects the Company’s findings at the time of its intervention only and within the limits of Client’s instructions, if any. The Company’s sole responsibility is to its Client and this document does not exonerate parties to a transaction from exercising all their rights and obligations under the transaction documents. This document cannot be reproduced except in full, without prior written approval of the Company. Any unauthorized alteration, forgery or falsification of the content or appearance of this document is unlawful and offenders may be prosecuted to the fullest extent of the law.

2.4 Test Configuration

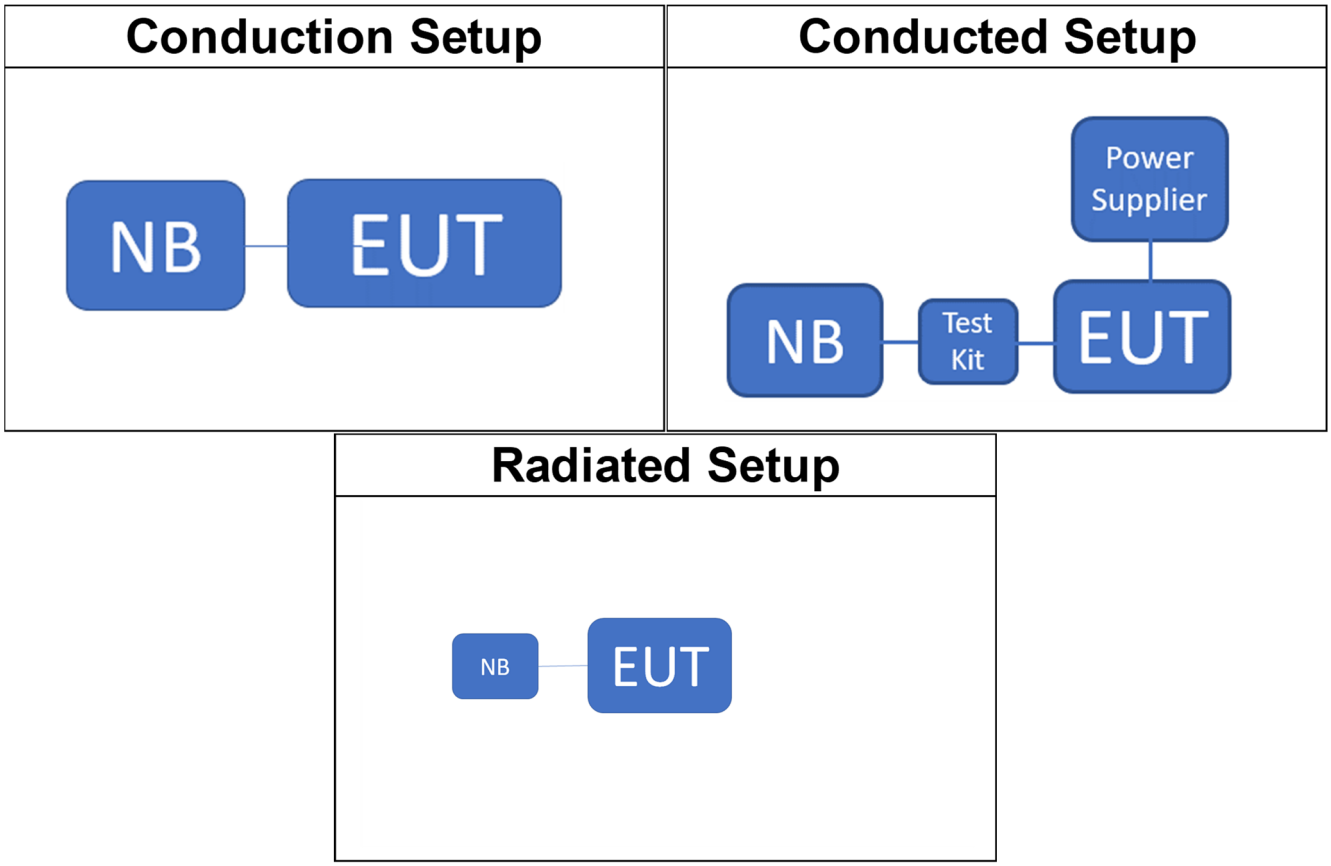

2.5 Control Unit(s)

AC Power-Line Conducted Emission Test Site: Conduction C					
EQUIPMENT TYPE	MFR	MODEL NUMBER	SERIAL NUMBER	LAST CAL.	CAL DUE.
Notebook	Lenovo	L440	P0000367	N/A	N/A

Radiated Emission Test Site: SAC C					
EQUIPMENT TYPE	MFR	MODEL NUMBER	SERIAL NUMBER	LAST CAL.	CAL DUE.
Notebook	Lenovo	L440	P0000367	N/A	N/A

Unless otherwise stated the results shown in this test report refer only to the sample(s) tested and such sample(s) are retained for 90 days only.
除非另有說明，此報告結果僅對測試之樣品負責，同時此樣品僅保留90天。本報告未經本公司書面許可，不可部份複製。
This document is issued by the Company subject to its General Conditions of Service printed overleaf, available on request or accessible at http://www.sgs.com.tw/Terms-and-Conditions and for electronic format documents, subject to Terms and Conditions for Electronic Documents at http://www.sgs.com.tw/Terms-and-Conditions. Attention is drawn to the limitation of liability, indemnification and jurisdiction issues defined therein. Any holder of this document is advised that information contained hereon reflects the Company's findings at the time of its intervention only and within the limits of Client's instructions, if any. The Company's sole responsibility is to its Client and this document does not exonerate parties to a transaction from exercising all their rights and obligations under the transaction documents. This document cannot be reproduced except in full, without prior written approval of the Company. Any unauthorized alteration, forgery or falsification of the content or appearance of this document is unlawful and offenders may be prosecuted to the fullest extent of the law.

3 SUMMARY OF TEST RESULTS

FCC Rules	ISED Rules	Description Of Test	Result
§15.207	RSS-Gen § 8.8	AC Power Line Conducted Emission	Compliant
§15.225 (a)-(d)	RSS210 Annex B B.6	Radiated Emission	Compliant
§15.209	RSS-Gen § 8.9	Radiated Emission Limits, general requirement	Compliant
§15.225 (e)	RSS210 Annex B B.6 (b)	Frequency Stability	Compliant
§2.1049 §15.215 (c)	RSS-Gen § 6.7	Emission Bandwidth	Compliant
§15.203	N/A	Antenna Requirement	Compliant

Unless otherwise stated the results shown in this test report refer only to the sample(s) tested and such sample(s) are retained for 90 days only.
除非另有說明，此報告結果僅對測試之樣品負責，同時此樣品僅保留90天。本報告未經本公司書面許可，不可部份複製。
This document is issued by the Company subject to its General Conditions of Service printed overleaf, available on request or accessible at http://www.sgs.com.tw/Terms-and-Conditions and for electronic format documents, subject to Terms and Conditions for Electronic Documents at http://www.sgs.com.tw/Terms-and-Conditions. Attention is drawn to the limitation of liability, indemnification and jurisdiction issues defined therein. Any holder of this document is advised that information contained hereon reflects the Company's findings at the time of its intervention only and within the limits of Client's instructions, if any. The Company's sole responsibility is to its Client and this document does not exonerate parties to a transaction from exercising all their rights and obligations under the transaction documents. This document cannot be reproduced except in full, without prior written approval of the Company. Any unauthorized alteration, forgery or falsification of the content or appearance of this document is unlawful and offenders may be prosecuted to the fullest extent of the law.

4 DESCRIPTION OF TEST MODES

4.1 The Worst Test Modes and Channel Details

1. The EUT stay in continuous transmission mode.
2. The frequency 13.56 MHz is the default channel to test, where it is the only manipulative channel as this application supports.
3. Only one configuration is supported/applicable as follows.

RADIATED EMISSION TEST			
MODE	AVAILABLE CHANNEL	TESTED CHANNEL	MODULATION
NFC	1	1	ASK
FREQUENCY STABILITY			
MODE	AVAILABLE CHANNEL	TESTED CHANNEL	MODULATION
NFC	1	1	ASK
20dB BANDWIDTH			
MODE	AVAILABLE CHANNEL	TESTED CHANNEL	MODULATION
NFC	1	1	ASK

The field strength of radiated emission was measured as the EUT positioned in different orthogonal planes (E1/E2/H) based on actual usage of the EUT to pre-scan the emissions for determining the worst case scenario.

Unless otherwise stated the results shown in this test report refer only to the sample(s) tested and such sample(s) are retained for 90 days only.
除非另有說明，此報告結果僅對測試之樣品負責，同時此樣品僅保留90天。本報告未經本公司書面許可，不可部份複製。
This document is issued by the Company subject to its General Conditions of Service printed overleaf, available on request or accessible at http://www.sgs.com.tw/Terms-and-Conditions and for electronic format documents, subject to Terms and Conditions for Electronic Documents at http://www.sgs.com.tw/Terms-and-Conditions. Attention is drawn to the limitation of liability, indemnification and jurisdiction issues defined therein. Any holder of this document is advised that information contained hereon reflects the Company's findings at the time of its intervention only and within the limits of Client's instructions, if any. The Company's sole responsibility is to its Client and this document does not exonerate parties to a transaction from exercising all their rights and obligations under the transaction documents. This document cannot be reproduced except in full, without prior written approval of the Company. Any unauthorized alteration, forgery or falsification of the content or appearance of this document is unlawful and offenders may be prosecuted to the fullest extent of the law.

5 MEASUREMENT UNCERTAINTY

Test Items	Uncertainty		
AC Power Line Conducted Emission	+/-	2.34	dB
Frequency Stability	+/-	1.53	Hz
Emission Bandwidth	+/-	1.53	Hz
Temperature	+/-	0.4	°C
Humidity	+/-	3.5	%
DC / AC Power Source	+/-	1	%

Radiated Spurious Emission Measurement Uncertainty				
Polarization: Vertical	**+/-**	**2.57**	**dB**	9kHz~30MHz
	+/-	**4.85**	**dB**	30MHz - 1000MHz
	+/-	**4.45**	**dB**	1GHz - 18GHz
	+/-	**4.24**	**dB**	18GHz - 40GHz
Polarization: Horizontal	**+/-**	**2.57**	**dB**	9kHz~30MHz
	+/-	**4.37**	**dB**	30MHz - 1000MHz
	+/-	**4.45**	**dB**	1GHz - 18GHz
	+/-	**4.24**	**dB**	18GHz - 40GHz

Note:

1. This uncertainty represents an expanded uncertainty expressed at approximately the 95% confidence level using a coverage factor of k=2.
2. The conformity assessment statement in this report is based solely on the test results, measurement uncertainty is excluded.

Unless otherwise stated the results shown in this test report refer only to the sample(s) tested and such sample(s) are retained for 90 days only.
除非另有說明，此報告結果僅對測試之樣品負責，同時此樣品僅保留90天。本報告未經本公司書面許可，不可部份複製。
This document is issued by the Company subject to its General Conditions of Service printed overleaf, available on request or accessible at http://www.sgs.com.tw/Terms-and-Conditions and for electronic format documents, subject to Terms and Conditions for Electronic Documents at http://www.sgs.com.tw/Terms-and-Conditions. Attention is drawn to the limitation of liability, indemnification and jurisdiction issues defined therein. Any holder of this document is advised that information contained hereon reflects the Company's findings at the time of its intervention only and within the limits of Client's instructions, if any. The Company's sole responsibility is to its Client and this document does not exonerate parties to a transaction from exercising all their rights and obligations under the transaction documents. This document cannot be reproduced except in full, without prior written approval of the Company. Any unauthorized alteration, forgery or falsification of the content or appearance of this document is unlawful and offenders may be prosecuted to the fullest extent of the law.

6 MEASUREMENT EQUIPMENT USED

6.1 Emission from AC power line

AC Power-Line Conducted Emission Test Site: Conduction C					
EQUIPMENT TYPE	MFR	MODEL NUMBER	SERIAL NUMBER	LAST CAL.	CAL DUE.
LISN	SCHWARZBECK Mess-Elektronik	NSLK8127	973	04/13/2022	04/12/2023
EMI Test Receiver	R&S	ESCI	101342	04/25/2022	04/24/2023
Coaxial Cable	EC Lab	RF-HY-CAB-250	RF-HY-CAB-250-01	03/27/2022	03/26/2023
Coaxial Cable	EMC Instruments Corp	EMC5D-BM-BM-3000	1401004	03/27/2022	03/26/2023
Test Software	audix	e3	E3 20923 SGS Ver.9 (C)	N.C.R	N.C.R

6.2 Conducted Measurement

Conducted Emission Test Site: Conducted C					
EQUIPMENT TYPE	MFR	MODEL NUMBER	SERIAL NUMBER	LAST CAL.	CAL DUE.
H-Loop Near Field Antenna	LANGER EMV-Technik	LF-R 400	02-1597	N.C.R	N.C.R
Spectrum Analyzer	KEYSIGHT	N9010B	MY59071570	06/01/2022	05/31/2023
Temperature Chamber	TERCHY	MHK-120LK	1020582	06/21/2022	06/20/2023
DC Power Supply	Gwinstek	SPS-3610	GEV856767	09/29/2021	09/28/2022
Attenuator	Marvelous	WATT-218FS-10	RF19	11/18/2021	11/17/2022
DC Block	PASTERNACK	PE8210	RF159	11/18/2021	11/17/2022
Notebook	Lenovo	T470	P0001293	N/A	N/A

6.3 Radiated Measurement

Radiated Emission Test Site: SAC C					
EQUIPMENT TYPE	MFR	MODEL NUMBER	SERIAL NUMBER	LAST CAL.	CAL DUE.
Broadband Antenna	SCHWARZBECK	VULB 9168	9168-300	10/19/2021	10/18/2022
Loop Antenna	ETS.LINDGREN	6502	143303	05/14/2022	05/13/2023
EMI Test Receiver	R&S	ESU 40	100363	04/28/2022	04/27/2023
Pre-Amplifier	EMC Instruments	EMC330	980096	11/18/2021	11/17/2022
Coaxial Cable	Huber Suhner	RG 214/U	W22.03	11/18/2021	11/17/2022
Test Software	audix	e3	20923 sgs Ver.9	N.C.R	N.C.R

NOTE: *N.C.R refers to Not Calibrated Required.*

Unless otherwise stated the results shown in this test report refer only to the sample(s) tested and such sample(s) are retained for 90 days only.
除非另有說明，此報告結果僅對測試之樣品負責，同時此樣品僅保留90天。本報告未經本公司書面許可，不可部份複製。
This document is issued by the Company subject to its General Conditions of Service printed overleaf, available on request or accessible at http://www.sgs.com.tw/Terms-and-Conditions and for electronic format documents, subject to Terms and Conditions for Electronic Documents at http://www.sgs.com.tw/Terms-and-Conditions. Attention is drawn to the limitation of liability, indemnification and jurisdiction issues defined therein. Any holder of this document is advised that information contained hereon reflects the Company's findings at the time of its intervention only and within the limits of Client's instructions, if any. The Company's sole responsibility is to its Client and this document does not exonerate parties to a transaction from exercising all their rights and obligations under the transaction documents. This document cannot be reproduced except in full, without prior written approval of the Company. Any unauthorized alteration, forgery or falsification of the content or appearance of this document is unlawful and offenders may be prosecuted to the fullest extent of the law.

7 CONDUCTED EMISSIONS TEST

7.1 Standard Applicable

According to §15.207 and frequency within 150 kHz to 30MHz shall not exceed the limit table as below.

Frequency range MHz	Limits (dBuV)	
	Quasi-peak	Average
0.15 to 0.50	66 to 56	56 to 46
0.50 to 5	56	46
5 to 30	60	50
Note 1.The lower limit shall apply at the transition frequencies 2.The limit decreases linearly with the logarithm of the frequency in the range 0.15 MHz to 0.50 MHz.		

7.2 EUT Setup

1. The conducted emission tests were performed in the test site, using the setup in accordance with the ANSI C63.10:2013.
2. The AC/DC Power adaptor of EUT was plug-in LISN. The EUT was placed flushed with the rear of the table.
3. The LISN was connected with 120Vac/60Hz power source.

7.3 Test SET-UP (Block Diagram of Configuration)

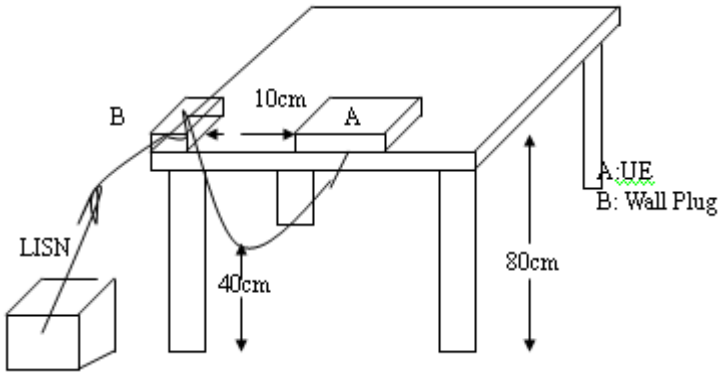

7.4 Measurement Procedure

1. The EUT was placed on a table which is 0.8m above ground plane.
2. Maximum procedure was performed on the six highest emissions to ensure EUT compliance.
3. Repeat above procedures until all frequency measured were complete.

7.5 Measurement Result

Note: Refer to next page for measurement data and plots.
Note2: The * reveals the worst-case results that closet to the limit.

Unless otherwise stated the results shown in this test report refer only to the sample(s) tested and such sample(s) are retained for 90 days only.
除非另有說明，此報告結果僅對測試之樣品負責，同時此樣品僅保留90天。本報告未經本公司書面許可，不可部份複製。
This document is issued by the Company subject to its General Conditions of Service printed overleaf, available on request or accessible at http://www.sgs.com.tw/Terms-and-Conditions and for electronic format documents, subject to Terms and Conditions for Electronic Documents at http://www.sgs.com.tw/Terms-and-Conditions. Attention is drawn to the limitation of liability, indemnification and jurisdiction issues defined therein. Any holder of this document is advised that information contained hereon reflects the Company's findings at the time of its intervention only and within the limits of Client's instructions, if any. The Company's sole responsibility is to its Client and this document does not exonerate parties to a transaction from exercising all their rights and obligations under the transaction documents. This document cannot be reproduced except in full, without prior written approval of the Company. Any unauthorized alteration, forgery or falsification of the content or appearance of this document is unlawful and offenders may be prosecuted to the fullest extent of the law.

AC POWER LINE CONDUCTED EMISSION TEST DATA

Report Number	:TERF2206000844E2	Test Site	:Conduction C
Test Mode	:NFC	Test Date	:2022-06-23
Power	:120V/60Hz	Temp./Humi.	:23.8/62
Probe	:L1	Engineer	:Andy Wang

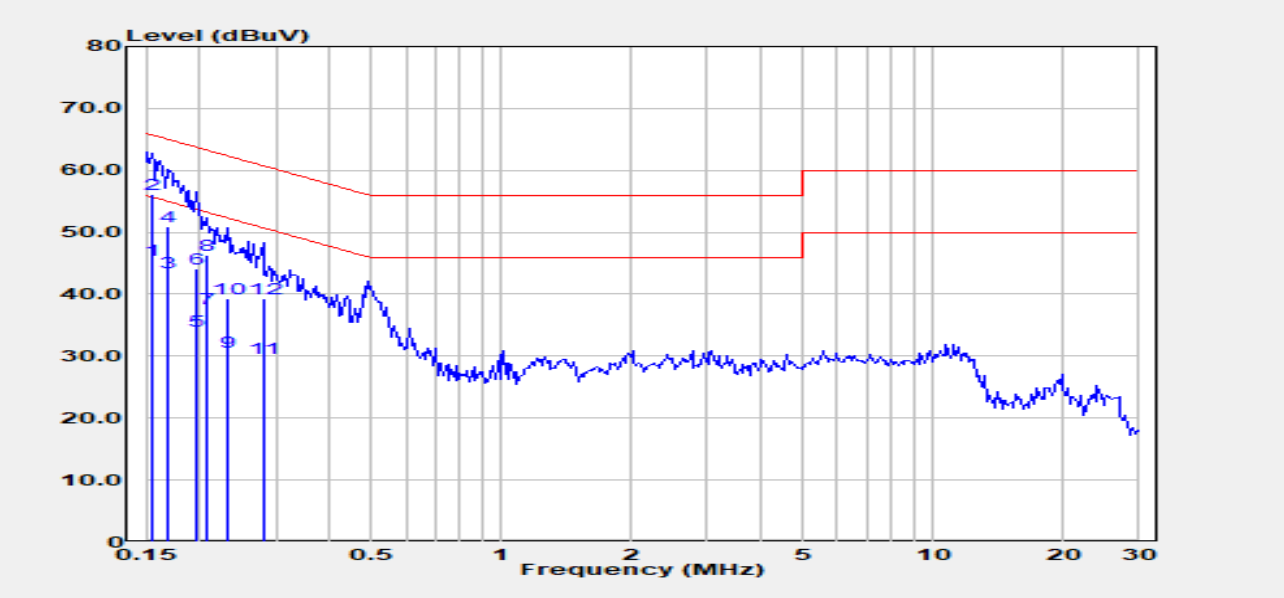

Freq. MHz	Detector Mode PK/QP/AV	Spectrum Reading Level dBμV	Factor dB	Actual FS dBμV	Limit dBμV	Margin dB
0.155	Average	35.20	10.27	45.47	55.74	-10.27
0.155	QP	45.80	10.27	56.07	65.74	-9.67
0.169	Average	33.20	10.27	43.47	55.03	-11.56
0.169	QP	40.70	10.27	50.97	65.03	-14.06
0.195	Average	23.80	10.27	34.07	53.80	-19.73
0.195	QP	33.90	10.27	44.17	63.80	-19.63
0.208	Average	27.50	10.27	37.77	53.27	-15.50
0.208	QP	36.00	10.27	46.27	63.27	-17.00
0.232	Average	20.40	10.28	30.68	52.39	-21.71
0.232	QP	29.00	10.28	39.28	62.39	-23.11
0.280	Average	19.30	10.29	29.59	50.81	-21.22
0.280	QP	29.10	10.29	39.39	60.81	-21.42

Unless otherwise stated the results shown in this test report refer only to the sample(s) tested and such sample(s) are retained for 90 days only.
除非另有說明，此報告結果僅對測試之樣品負責，同時此樣品僅保留90天。本報告未經本公司書面許可，不可部份複製。
This document is issued by the Company subject to its General Conditions of Service printed overleaf, available on request or accessible at http://www.sgs.com.tw/Terms-and-Conditions and for electronic format documents, subject to Terms and Conditions for Electronic Documents at http://www.sgs.com.tw/Terms-and-Conditions. Attention is drawn to the limitation of liability, indemnification and jurisdiction issues defined therein. Any holder of this document is advised that information contained hereon reflects the Company's findings at the time of its intervention only and within the limits of Client's instructions, if any. The Company's sole responsibility is to its Client and this document does not exonerate parties to a transaction from exercising all their rights and obligations under the transaction documents. This document cannot be reproduced except in full, without prior written approval of the Company. Any unauthorized alteration, forgery or falsification of the content or appearance of this document is unlawful and offenders may be prosecuted to the fullest extent of the law.

Report Number	:TERF2206000844E2	Test Site	:Conduction C
Test Mode	:NFC	Test Date	:2022-06-23
Power	:120V/60Hz	Temp./Humi.	:23.8/62
Probe	:N	Engineer	:Andy Wang

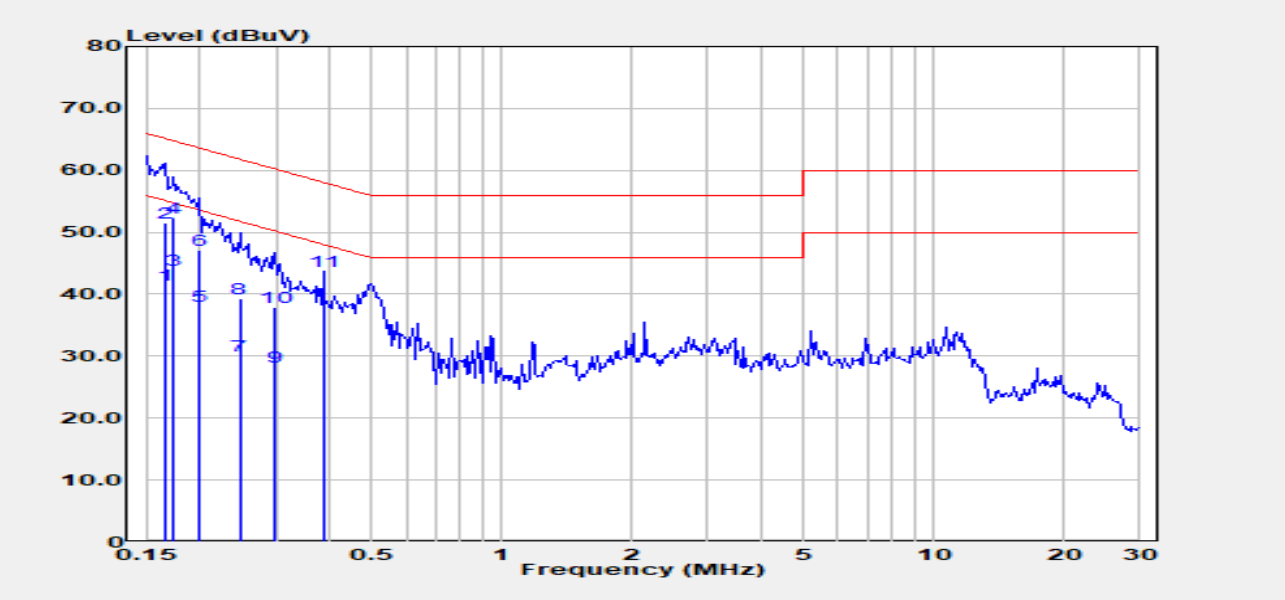

Freq. MHz	Detector Mode PK/QP/AV	Spectrum Reading Level dBμV	Factor dB	Actual FS dBμV	Limit dBμV	Margin dB
0.167	Average	31.30	10.28	41.58	55.12	-13.54
0.167	QP	41.20	10.28	51.48	65.12	-13.64
0.174	Average	33.60	10.27	43.87	54.77	-10.89
0.174	QP	42.10	10.27	52.37	64.77	-12.39
0.200	Average	27.80	10.27	38.07	53.62	-15.55
0.200	QP	36.80	10.27	47.07	63.62	-16.55
0.247	Average	19.80	10.28	30.08	51.86	-21.79
0.247	QP	29.00	10.28	39.28	61.86	-22.59
0.299	Average	17.90	10.28	28.18	50.28	-22.09
0.299	QP	27.60	10.28	37.88	60.28	-22.39
0.385	Peak	33.46	10.29	43.75	58.17	-14.42

Unless otherwise stated the results shown in this test report refer only to the sample(s) tested and such sample(s) are retained for 90 days only.
除非另有說明，此報告結果僅對測試之樣品負責，同時此樣品僅保留90天。本報告未經本公司書面許可，不可部份複製。
This document is issued by the Company subject to its General Conditions of Service printed overleaf, available on request or accessible at http://www.sgs.com.tw/Terms-and-Conditions and for electronic format documents, subject to Terms and Conditions for Electronic Documents at http://www.sgs.com.tw/Terms-and-Conditions. Attention is drawn to the limitation of liability, indemnification and jurisdiction issues defined therein. Any holder of this document is advised that information contained hereon reflects the Company's findings at the time of its intervention only and within the limits of Client's instructions, if any. The Company's sole responsibility is to its Client and this document does not exonerate parties to a transaction from exercising all their rights and obligations under the transaction documents. This document cannot be reproduced except in full, without prior written approval of the Company. Any unauthorized alteration, forgery or falsification of the content or appearance of this document is unlawful and offenders may be prosecuted to the fullest extent of the law.

7.6

Report Number	:TERF2206000844E2	Test Site	:SAC C
Operation Mode	:NFC	Test Date	:2022-06-22
Test Frequency	:13.56 MHz	Temp./Humi.	:24.8/67
Test Mode	:Mask	Antenna Pol.	:Vertical
EUT Pol	:H Plane	Engineer	:Andy Wang

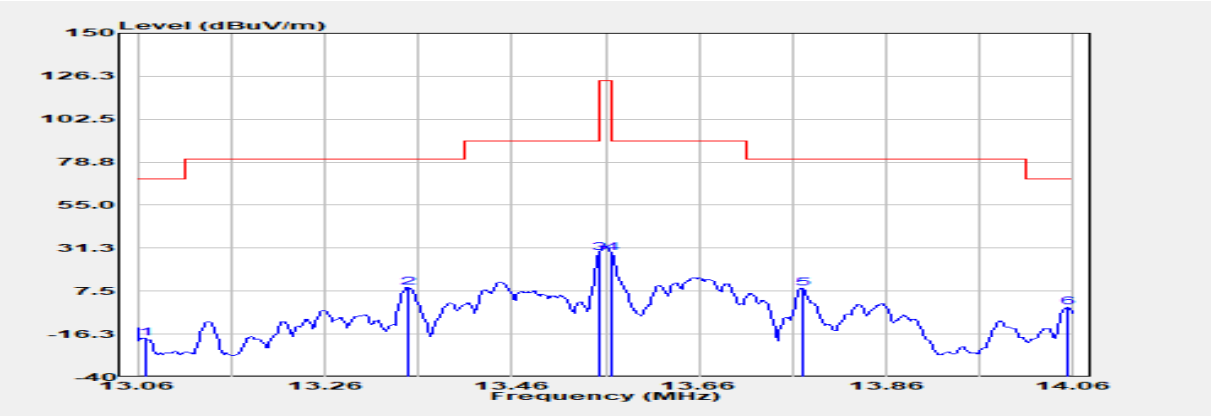

Freq. MHz	Detector Mode PK/QP/AV	Spectrum Reading Level dBμV	Factor dB	Actual dBμV/m	Limit dBμV/m	Margin dB
13.068	Peak	9.35	-28.06	-18.71	69.54	-88.25
13.348	Peak	37.73	-28.09	9.65	80.50	-70.85
13.553	Peak	56.63	-28.10	28.53	90.47	-61.94
13.567	Peak	56.64	-28.10	28.54	90.47	-61.93
13.770	Peak	37.30	-28.12	9.18	80.50	-71.32
14.054	Peak	26.53	-28.14	-1.61	69.54	-71.15

Actual level = Reading level + Factor
Factor = Antenna factor + cable loss – Pre_Amplifier Gain – distance factor

Test distance= 3m

For Actual level and limit:
Field strength (dBuV/m) at 300m, within the band 9 kHz - 490 kHz.
Field strength (dBuV/m) at 30m, within the band 490 kHz - 30 MHz.

Unless otherwise stated the results shown in this test report refer only to the sample(s) tested and such sample(s) are retained for 90 days only.
除非另有說明，此報告結果僅對測試之樣品負責，同時此樣品僅保留90天。本報告未經本公司書面許可，不可部份複製。
This document is issued by the Company subject to its General Conditions of Service printed overleaf, available on request or accessible at http://www.sgs.com.tw/Terms-and-Conditions and for electronic format documents, subject to Terms and Conditions for Electronic Documents at http://www.sgs.com.tw/Terms-and-Conditions. Attention is drawn to the limitation of liability, indemnification and jurisdiction issues defined therein. Any holder of this document is advised that information contained hereon reflects the Company's findings at the time of its intervention only and within the limits of Client's instructions, if any. The Company's sole responsibility is to its Client and this document does not exonerate parties to a transaction from exercising all their rights and obligations under the transaction documents. This document cannot be reproduced except in full, without prior written approval of the Company. Any unauthorized alteration, forgery or falsification of the content or appearance of this document is unlawful and offenders may be prosecuted to the fullest extent of the law.

Report Number	:TERF2206000844E2	Test Site	:SAC C
Operation Mode	:NFC	Test Date	:2022-06-22
Test Frequency	:13.56 MHz	Temp./Humi.	:24.8/67
Test Mode	:Mask	Antenna Pol.	:Horizontal
EUT Pol	:H Plane	Engineer	:Andy Wang

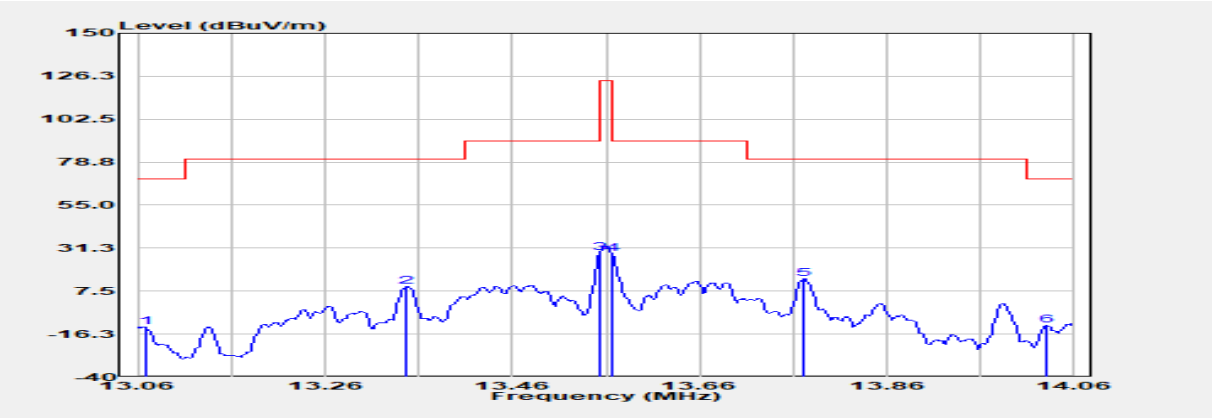

Freq. MHz	Detector Mode PK/QP/AV	Spectrum Reading Level dBμV	Factor dB	Actual dBμV/m	Limit dBμV/m	Margin dB
13.068	Peak	15.61	-28.06	-12.45	69.54	-81.99
13.347	Peak	38.30	-28.09	10.22	80.50	-70.28
13.553	Peak	56.48	-28.10	28.38	90.47	-62.09
13.567	Peak	56.40	-28.10	28.29	90.47	-62.18
13.772	Peak	42.28	-28.12	14.16	80.50	-66.34
14.030	Peak	16.59	-28.14	-11.55	69.54	-81.09

Actual level = Reading level + Factor
Factor = Antenna factor + cable loss – Pre_Amplifier Gain – distance factor

Test distance= 3m

For Actual level and limit:
Field strength (dBuV/m) at 300m, within the band 9 kHz - 490 kHz.
Field strength (dBuV/m) at 30m, within the band 490 kHz - 30 MHz.

Unless otherwise stated the results shown in this test report refer only to the sample(s) tested and such sample(s) are retained for 90 days only.
除非另有說明，此報告結果僅對測試之樣品負責，同時此樣品僅保留90天。本報告未經本公司書面許可，不可部份複製。
This document is issued by the Company subject to its General Conditions of Service printed overleaf, available on request or accessible at http://www.sgs.com.tw/Terms-and-Conditions and for electronic format documents, subject to Terms and Conditions for Electronic Documents at http://www.sgs.com.tw/Terms-and-Conditions. Attention is drawn to the limitation of liability, indemnification and jurisdiction issues defined therein. Any holder of this document is advised that information contained hereon reflects the Company's findings at the time of its intervention only and within the limits of Client's instructions, if any. The Company's sole responsibility is to its Client and this document does not exonerate parties to a transaction from exercising all their rights and obligations under the transaction documents. This document cannot be reproduced except in full, without prior written approval of the Company. Any unauthorized alteration, forgery or falsification of the content or appearance of this document is unlawful and offenders may be prosecuted to the fullest extent of the law.

8 RADIATED EMISSION TEST

8.1 Test SET-UP (Block Diagram of Configuration)

(A) Radiated Emission Test Set-Up, Frequency Below 30MHz.

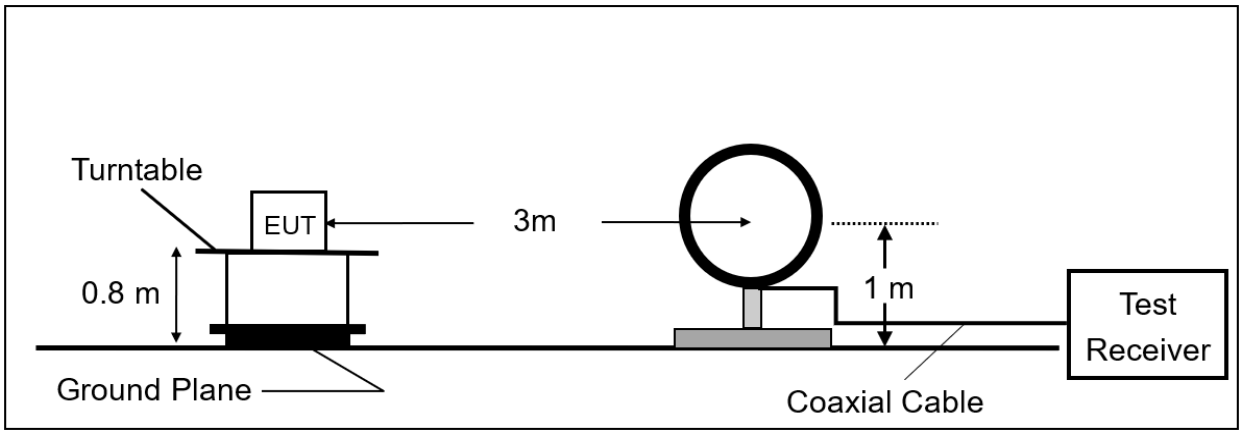

(B) Radiated Emission Test Set-Up, Frequency From 30MHz to 1000MHz.

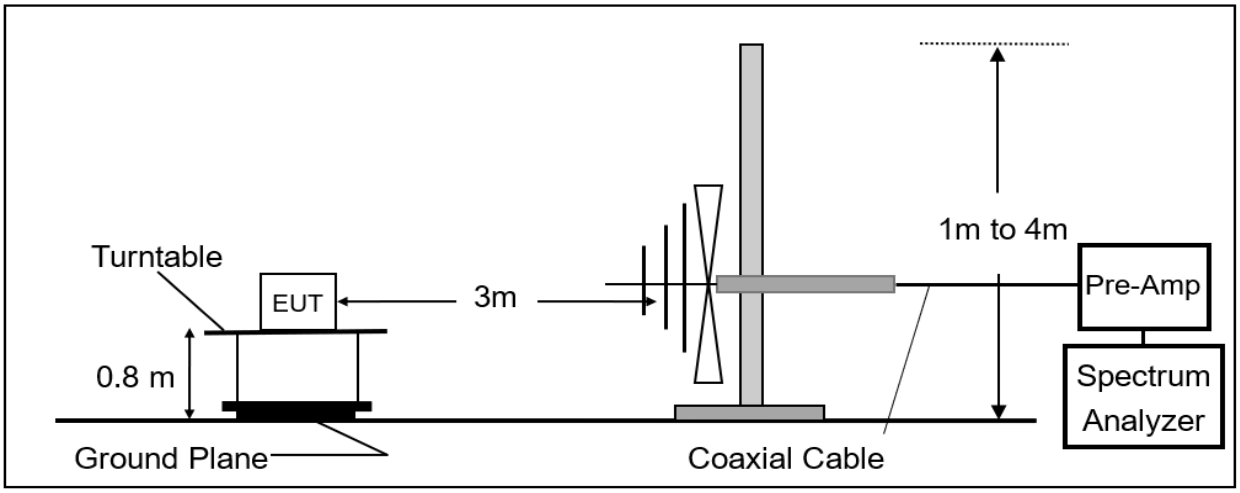

8.2 Measurement Procedure

1. Configure the EUT according to ANSI C63.10.
2. The EUT was placed on a turn table which is 0.8m above ground plane and been measured in the frequency range between 0.009MHz to 30MHz and 30MHz to 1GHz.
3. The turn table shall rotate 360 degrees to determine the position of maximum emission level.
4. EUT is set 3m away from the receiving antenna which varied from 1m to 4m to find out the highest emission.
5. Maximum procedure was performed on the six highest emissions to ensure EUT compliance.
6. And also, each emission was to be maximized by changing the polarization of receiving antenna both horizontal and vertical.
7. Repeat above procedures until all default test channel measured were complete.

Unless otherwise stated the results shown in this test report refer only to the sample(s) tested and such sample(s) are retained for 90 days only.
除非另有說明，此報告結果僅對測試之樣品負責，同時此樣品僅保留90天。本報告未經本公司書面許可，不可部份複製。
This document is issued by the Company subject to its General Conditions of Service printed overleaf, available on request or accessible at http://www.sgs.com.tw/Terms-and-Conditions and for electronic format documents, subject to Terms and Conditions for Electronic Documents at http://www.sgs.com.tw/Terms-and-Conditions. Attention is drawn to the limitation of liability, indemnification and jurisdiction issues defined therein. Any holder of this document is advised that information contained hereon reflects the Company's findings at the time of its intervention only and within the limits of Client's instructions, if any. The Company's sole responsibility is to its Client and this document does not exonerate parties to a transaction from exercising all their rights and obligations under the transaction documents. This document cannot be reproduced except in full, without prior written approval of the Company. Any unauthorized alteration, forgery or falsification of the content or appearance of this document is unlawful and offenders may be prosecuted to the fullest extent of the law.

8.3 Field Strength Calculation

The field strength is calculated by adding the Antenna Factor and Cable Factor and subtracting the Amplifier Gain and Duty Cycle Correction Factor (if any) from the measured reading. The basic equation with a sample calculation is as follows:

FS = RA + AF + CL - AG

Where FS = Field Strength	CL = Cable Attenuation Factor (Cable Loss)
RA = Reading Amplitude	AG = Amplifier Gain
AF = Antenna Factor	

8.4 Field Strength of Fundamental Emission

8.4.1 Applicable standard

Rules and specifiactions	CFR 47 Part 15 section 15.225(a)-(d)	
Frequency of Emission (MHz)	**Field Strength (μV/m)at 30m**	**Field Strength (dBμV/m)at 30m**
1.705~13.110	30	29.5
13.110~13.410	106	40.5
13.410~13.553	334	50.5
13.553~13.567	15848	84
13.567~13.710	334	50.5
13.710~14.010	106	40.5
14.010~30.00	30	29.5

Radiated Mask per ISED RSS 210 Annex B B6

(a) 15.848 millivolts/m (84 dBμV/m) at 30 m, within the band 13.553-13.567 MHz.

(b) 334 microvolts/m (50.5 dBμV/m) at 30 m, within the bands 13.410-13.553 MHz and 13.567-13.710 MHz.

(c) 106 microvolts/m (40.5 dBμV/m) at 30 m, within the bands 13.110-13.410 MHz and 13.710-14.010 MHz.

(d) RSS-Gen general field strength limits for frequencies outside the band 13.110-14.010 MHz

Unless otherwise stated the results shown in this test report refer only to the sample(s) tested and such sample(s) are retained for 90 days only.
除非另有說明，此報告結果僅對測試之樣品負責，同時此樣品僅保留90天。本報告未經本公司書面許可，不可部份複製。
This document is issued by the Company subject to its General Conditions of Service printed overleaf, available on request or accessible at http://www.sgs.com.tw/Terms-and-Conditions and for electronic format documents, subject to Terms and Conditions for Electronic Documents at http://www.sgs.com.tw/Terms-and-Conditions. Attention is drawn to the limitation of liability, indemnification and jurisdiction issues defined therein. Any holder of this document is advised that information contained hereon reflects the Company's findings at the time of its intervention only and within the limits of Client's instructions, if any. The Company's sole responsibility is to its Client and this document does not exonerate parties to a transaction from exercising all their rights and obligations under the transaction documents. This document cannot be reproduced except in full, without prior written approval of the Company. Any unauthorized alteration, forgery or falsification of the content or appearance of this document is unlawful and offenders may be prosecuted to the fullest extent of the law.

8.4.2 Distance Extrapolation Factor

30m to 3m

Distance extrapolation = 40 *log (30/3) = 40 dB

30m to 10m

Distance extrapolation = 40 *log (30/10) = 19.08 dB

10m to 3m

Distance extrapolation = 40 *log (10/3) = 20.92 dB

Note:

1. Distance extrapolation factor = 40 log (required distance/ test distance) (dB)
2. The lower limit shall apply at the transition frequencies.
3. KDB 414788 D01 OATS and 3m semi-anechoic chamber Justification:
   Base on FCC 15.31 (f) (2): measurements may be performed at a distance closer than that specified in the regulations; however, an attempt should be made to avoid making measurements in the near field. OATS and 3m SAC chamber testing had been performed and 3m SAC measured test result is the worst case test result.

Actual FS(dBμV/m) = Spectrum. Reading level(dBμV) + Factor(dB)
Below 30 MHz of Factor(dB) = Antenna Factor(dBμV/m) + Cable Loss(dB) – Distance Factor (dB)
Above 30 MHz of Factor(dB) = Antenna Factor(dBμV/m) + Cable Loss(dB) – Pre_Amp Gain (dB)

The trace on RE(radiation emission) plot is as colored blue, and the detection manner we've employed is peak detector.

Unless otherwise stated the results shown in this test report refer only to the sample(s) tested and such sample(s) are retained for 90 days only.
除非另有說明，此報告結果僅對測試之樣品負責，同時此樣品僅保留90天。本報告未經本公司書面許可，不可部份複製。
This document is issued by the Company subject to its General Conditions of Service printed overleaf, available on request or accessible at http://www.sgs.com.tw/Terms-and-Conditions and for electronic format documents, subject to Terms and Conditions for Electronic Documents at http://www.sgs.com.tw/Terms-and-Conditions. Attention is drawn to the limitation of liability, indemnification and jurisdiction issues defined therein. Any holder of this document is advised that information contained hereon reflects the Company's findings at the time of its intervention only and within the limits of Client's instructions, if any. The Company's sole responsibility is to its Client and this document does not exonerate parties to a transaction from exercising all their rights and obligations under the transaction documents. This document cannot be reproduced except in full, without prior written approval of the Company. Any unauthorized alteration, forgery or falsification of the content or appearance of this document is unlawful and offenders may be prosecuted to the fullest extent of the law.

8.4.3 Field Strength of Fundamental Emission Measurement Result

Report Number	:TERF2206000844E2	Test Site	:SAC C
Operation Mode	:NFC	Test Date	:2022-06-22
Test Frequency	:13.56 MHz	Temp./Humi.	:24.8/67
Test Mode	:Main	Antenna Pol.	:Vertical
EUT Pol	:H Plane	Engineer	:Andy Wang

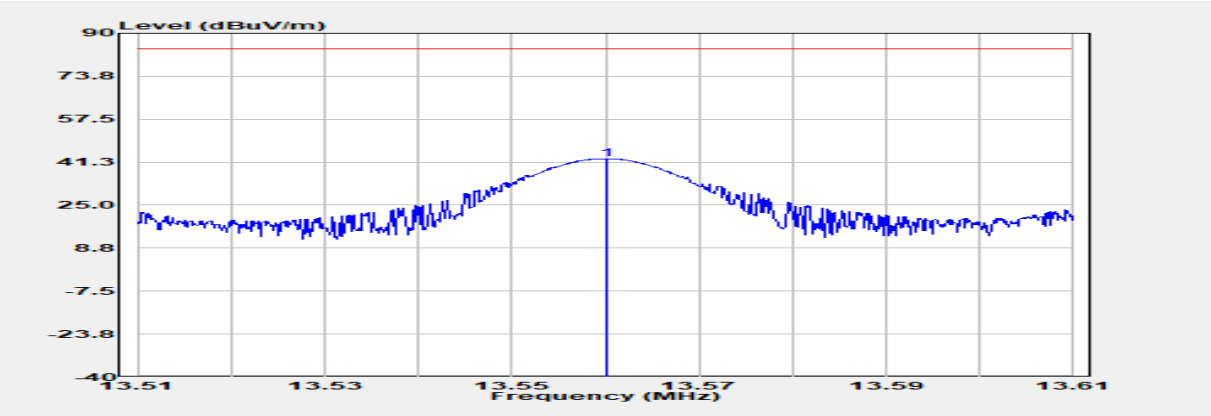

Freq. MHz	Detector Mode PK/QP/AV	Spectrum Reading Level dBμV	Factor dB	Actual dBμV/m	Limit dBμV/m	Margin dB
13.560	Peak	70.69	-28.10	42.58	84.00	-41.42

Actual level = Reading level + Factor
Factor = Antenna factor + cable loss – Pre_Amplifier Gain — distance factor

Test distance= 3m

For Actual level and limit:
Field strength (dBuV/m) at 300m, within the band 9 kHz - 490 kHz.
Field strength (dBuV/m) at 30m, within the band 490 kHz - 30 MHz.

Unless otherwise stated the results shown in this test report refer only to the sample(s) tested and such sample(s) are retained for 90 days only.
除非另有說明，此報告結果僅對測試之樣品負責，同時此樣品僅保留90天。本報告未經本公司書面許可，不可部份複製。
This document is issued by the Company subject to its General Conditions of Service printed overleaf, available on request or accessible at http://www.sgs.com.tw/Terms-and-Conditions and for electronic format documents, subject to Terms and Conditions for Electronic Documents at http://www.sgs.com.tw/Terms-and-Conditions. Attention is drawn to the limitation of liability, indemnification and jurisdiction issues defined therein. Any holder of this document is advised that information contained hereon reflects the Company's findings at the time of its intervention only and within the limits of Client's instructions, if any. The Company's sole responsibility is to its Client and this document does not exonerate parties to a transaction from exercising all their rights and obligations under the transaction documents. This document cannot be reproduced except in full, without prior written approval of the Company. Any unauthorized alteration, forgery or falsification of the content or appearance of this document is unlawful and offenders may be prosecuted to the fullest extent of the law.

Report Number	:TERF2206000844E2	Test Site	:SAC C
Operation Mode	:NFC	Test Date	:2022-06-22
Test Frequency	:13.56 MHz	Temp./Humi.	:24.8/67
Test Mode	:Main	Antenna Pol.	:Horizontal
EUT Pol	:H Plane	Engineer	:Andy Wang

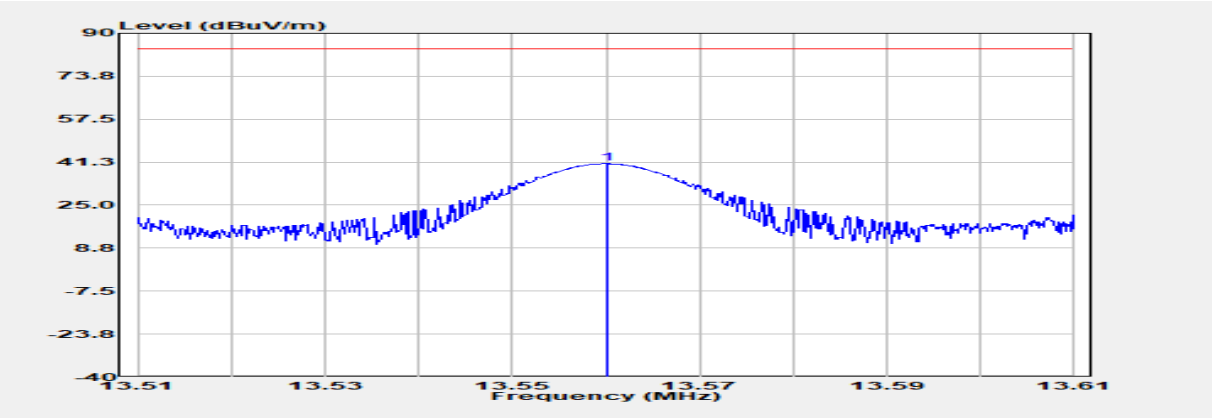

Freq. MHz	Detector Mode PK/QP/AV	Spectrum Reading Level dBμV	Factor dB	Actual dBμV/m	Limit dBμV/m	Margin dB
13.560	Peak	68.77	-28.10	40.67	84.00	-43.33

Actual level = Reading level + Factor
Factor = Antenna factor + cable loss – Pre_Amplifier Gain — distance factor

Test distance= 3m

For Actual level and limit:
Field strength (dBuV/m) at 300m, within the band 9 kHz - 490 kHz.
Field strength (dBuV/m) at 30m, within the band 490 kHz - 30 MHz.

Unless otherwise stated the results shown in this test report refer only to the sample(s) tested and such sample(s) are retained for 90 days only.
除非另有說明，此報告結果僅對測試之樣品負責，同時此樣品僅保留90天。本報告未經本公司書面許可，不可部份複製。
This document is issued by the Company subject to its General Conditions of Service printed overleaf, available on request or accessible at http://www.sgs.com.tw/Terms-and-Conditions and for electronic format documents, subject to Terms and Conditions for Electronic Documents at http://www.sgs.com.tw/Terms-and-Conditions. Attention is drawn to the limitation of liability, indemnification and jurisdiction issues defined therein. Any holder of this document is advised that information contained hereon reflects the Company's findings at the time of its intervention only and within the limits of Client's instructions, if any. The Company's sole responsibility is to its Client and this document does not exonerate parties to a transaction from exercising all their rights and obligations under the transaction documents. This document cannot be reproduced except in full, without prior written approval of the Company. Any unauthorized alteration, forgery or falsification of the content or appearance of this document is unlawful and offenders may be prosecuted to the fullest extent of the law.

8.5 Radiated Spurious Emission Measurement

8.5.1 Standard Applicable

The field strength of any emissions appearing outside of the 13.110-14.010 MHz shall not exceed the general radiated emission limits in section 15.209 as below.

Frequency (MHz)	Field strength (μV/m)	Distance (meters)
0.009~0.490	2400/F(kHz)	300
0.490~1.705	24000/F(kHz)	30
1.705-30	30	30
30-88	100	3
88-216	150	3
216-960	200	3
Above 960	500	3

Note:

1. Emission level in dBμV/m=20 log (μV/m)
2. Distance extrapolation factor = 40 log (required distance/ test distance) (dB)
3. 20*log(30uV/m) = 29.54 dBuV/m
4. The lower limit shall apply at the transition frequencies.
5. The measurement was undertaken in closer distance at 3m, where extrapolation factor is offset to convert the limit of the measurement.
6. Only spurious frequency is permitted to locate within the Restricted Bands specified in provision of §15.205 and RSS-Gen §8.10.
7. The general radiated emission limits in §15.209 and RSS-Gen §8.9 apply for the spurious emission generate from UE, except for the fundamental emission where the respective section specifies otherwise.

Unless otherwise stated the results shown in this test report refer only to the sample(s) tested and such sample(s) are retained for 90 days only.
除非另有說明，此報告結果僅對測試之樣品負責，同時此樣品僅保留90天。本報告未經本公司書面許可，不可部份複製。
This document is issued by the Company subject to its General Conditions of Service printed overleaf, available on request or accessible at http://www.sgs.com.tw/Terms-and-Conditions and for electronic format documents, subject to Terms and Conditions for Electronic Documents at http://www.sgs.com.tw/Terms-and-Conditions. Attention is drawn to the limitation of liability, indemnification and jurisdiction issues defined therein. Any holder of this document is advised that information contained hereon reflects the Company's findings at the time of its intervention only and within the limits of Client's instructions, if any. The Company's sole responsibility is to its Client and this document does not exonerate parties to a transaction from exercising all their rights and obligations under the transaction documents. This document cannot be reproduced except in full, without prior written approval of the Company. Any unauthorized alteration, forgery or falsification of the content or appearance of this document is unlawful and offenders may be prosecuted to the fullest extent of the law.

8.5.2 Radiated Spurious Emission Measurement Result

Report Number	:TERF2206000844E2	Test Site	:SAC C
Operation Mode	:NFC	Test Date	:2022-06-22
Test Frequency	:13.56 MHz	Temp./Humi.	:24.8/67
Test Mode	:TX	Antenna Pol.	:Vertical
EUT Pol	:H Plane	Engineer	:Andy Wang

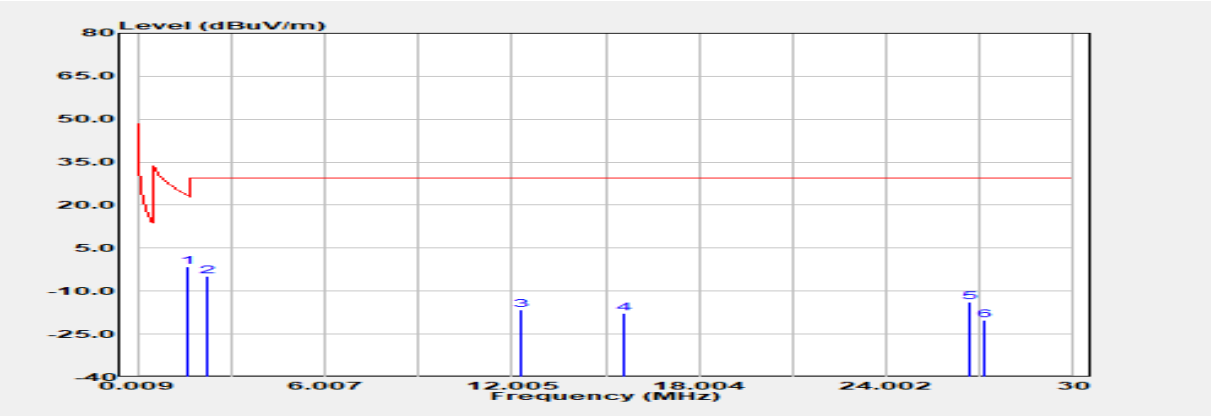

Freq. MHz	Detector Mode PK/QP/AV	Spectrum Reading Level dBμV	Factor dB	Actual dBμV/m	Limit dBμV/m	Margin dB
1.595	Peak	27.23	-28.64	-1.41	23.55	-24.96
2.220	Peak	23.92	-28.74	-4.82	29.54	-34.36
12.313	Peak	11.34	-28.00	-16.66	29.54	-46.20
15.629	Peak	10.50	-28.26	-17.76	29.54	-47.30
26.684	Peak	15.91	-29.74	-13.83	29.54	-43.37
27.120	Peak	9.75	-29.79	-20.03	29.54	-49.57

Actual level = Reading level + Factor
Factor = Antenna factor + cable loss – Pre_Amplifier Gain — distance factor

Test distance= 3m

For Actual level and limit:
Field strength (dBuV/m) at 300m, within the band 9 kHz - 490 kHz.
Field strength (dBuV/m) at 30m, within the band 490 kHz - 30 MHz.

Unless otherwise stated the results shown in this test report refer only to the sample(s) tested and such sample(s) are retained for 90 days only.
除非另有說明，此報告結果僅對測試之樣品負責，同時此樣品僅保留90天。本報告未經本公司書面許可，不可部份複製。
This document is issued by the Company subject to its General Conditions of Service printed overleaf, available on request or accessible at http://www.sgs.com.tw/Terms-and-Conditions and for electronic format documents, subject to Terms and Conditions for Electronic Documents at http://www.sgs.com.tw/Terms-and-Conditions. Attention is drawn to the limitation of liability, indemnification and jurisdiction issues defined therein. Any holder of this document is advised that information contained hereon reflects the Company's findings at the time of its intervention only and within the limits of Client's instructions, if any. The Company's sole responsibility is to its Client and this document does not exonerate parties to a transaction from exercising all their rights and obligations under the transaction documents. This document cannot be reproduced except in full, without prior written approval of the Company. Any unauthorized alteration, forgery or falsification of the content or appearance of this document is unlawful and offenders may be prosecuted to the fullest extent of the law.

Report Number	:TERF2206000844E2	Test Site	:SAC C
Operation Mode	:NFC	Test Date	:2022-06-22
Test Frequency	:13.56 MHz	Temp./Humi.	:24.8/67
Test Mode	:TX	Antenna Pol.	:Horizontal
EUT Pol	:H Plane	Engineer	:Andy Wang

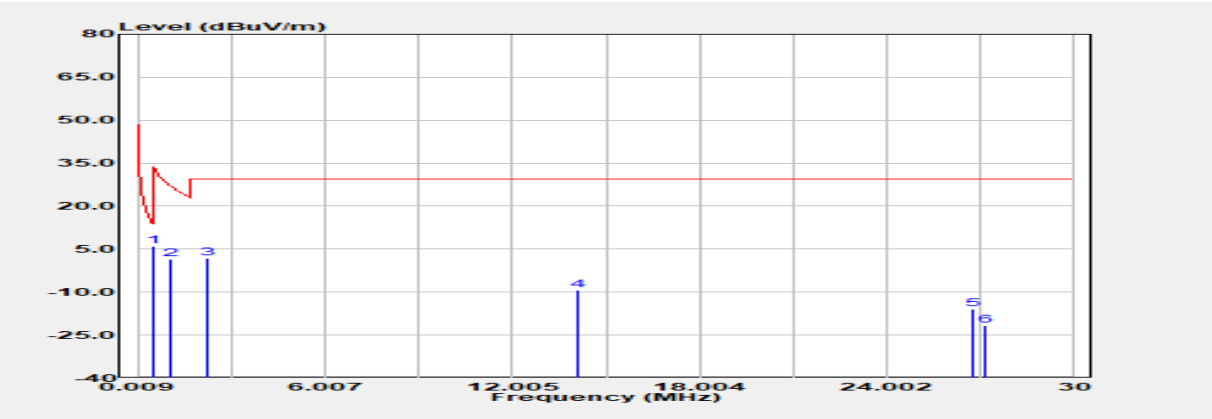

Freq. MHz	Detector Mode PK/QP/AV	Spectrum Reading Level dBμV	Factor dB	Actual dBμV/m	Limit dBμV/m	Margin dB
0.538	Peak	34.58	-28.53	6.05	33.00	-26.95
1.066	Peak	29.95	-28.52	1.43	27.05	-25.62
2.220	Peak	30.60	-28.74	1.86	29.54	-27.68
14.139	Peak	18.76	-28.15	-9.39	29.54	-38.93
26.780	Peak	13.68	-29.75	-16.07	29.54	-45.61
27.120	Peak	8.04	-29.79	-21.75	29.54	-51.29

Actual level = Reading level + Factor
Factor = Antenna factor + cable loss – Pre_Amplifier Gain — distance factor

Test distance= 3m

For Actual level and limit:
Field strength (dBuV/m) at 300m, within the band 9 kHz - 490 kHz.
Field strength (dBuV/m) at 30m, within the band 490 kHz - 30 MHz.

Unless otherwise stated the results shown in this test report refer only to the sample(s) tested and such sample(s) are retained for 90 days only.
除非另有說明，此報告結果僅對測試之樣品負責，同時此樣品僅保留90天。本報告未經本公司書面許可，不可部份複製。
This document is issued by the Company subject to its General Conditions of Service printed overleaf, available on request or accessible at http://www.sgs.com.tw/Terms-and-Conditions and for electronic format documents, subject to Terms and Conditions for Electronic Documents at http://www.sgs.com.tw/Terms-and-Conditions. Attention is drawn to the limitation of liability, indemnification and jurisdiction issues defined therein. Any holder of this document is advised that information contained hereon reflects the Company's findings at the time of its intervention only and within the limits of Client's instructions, if any. The Company's sole responsibility is to its Client and this document does not exonerate parties to a transaction from exercising all their rights and obligations under the transaction documents. This document cannot be reproduced except in full, without prior written approval of the Company. Any unauthorized alteration, forgery or falsification of the content or appearance of this document is unlawful and offenders may be prosecuted to the fullest extent of the law.

Report Number	:TERF2206000844E2	Test Site	:SAC C
Operation Mode	:NFC	Test Date	:2022-06-22
Test Frequency	:13.56 MHz	Temp./Humi.	:24.8/67
Test Mode	:TX	Antenna Pol.	:Vertical
EUT Pol	:H Plane	Engineer	:Andy Wang

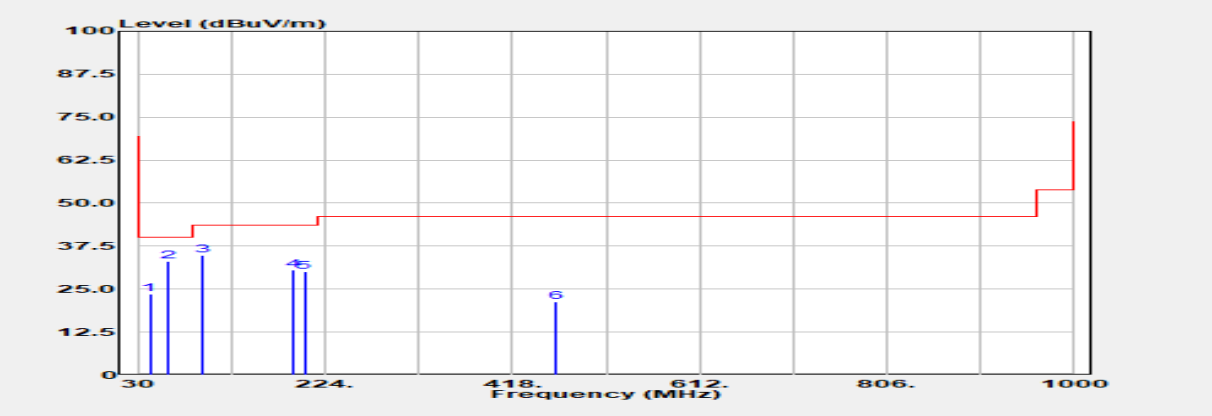

Freq. MHz	Detector Mode PK/QP/AV	Spectrum Reading Level dBμV	Factor dB	Actual dBμV/m	Limit @3m dBμV/m	Margin dB
42.436	Peak	38.25	-14.75	23.50	40.00	-16.50
61.090	Peak	48.38	-15.36	33.02	40.00	-6.98
96.843	Peak	54.16	-19.38	34.78	43.50	-8.72
191.667	Peak	47.32	-16.86	30.46	43.50	-13.04
202.548	Peak	47.39	-17.21	30.18	43.50	-13.32
463.702	Peak	29.14	-7.71	21.43	46.00	-24.57

Unless otherwise stated the results shown in this test report refer only to the sample(s) tested and such sample(s) are retained for 90 days only.
除非另有說明，此報告結果僅對測試之樣品負責，同時此樣品僅保留90天。本報告未經本公司書面許可，不可部份複製。
This document is issued by the Company subject to its General Conditions of Service printed overleaf, available on request or accessible at http://www.sgs.com.tw/Terms-and-Conditions and for electronic format documents, subject to Terms and Conditions for Electronic Documents at http://www.sgs.com.tw/Terms-and-Conditions. Attention is drawn to the limitation of liability, indemnification and jurisdiction issues defined therein. Any holder of this document is advised that information contained hereon reflects the Company's findings at the time of its intervention only and within the limits of Client's instructions, if any. The Company's sole responsibility is to its Client and this document does not exonerate parties to a transaction from exercising all their rights and obligations under the transaction documents. This document cannot be reproduced except in full, without prior written approval of the Company. Any unauthorized alteration, forgery or falsification of the content or appearance of this document is unlawful and offenders may be prosecuted to the fullest extent of the law.

Report Number	:TERF2206000844E2	Test Site	:SAC C
Operation Mode	:NFC	Test Date	:2022-06-22
Test Frequency	:13.56 MHz	Temp./Humi.	:24.8/67
Test Mode	:TX	Antenna Pol.	:Horizontal
EUT Pol	:H Plane	Engineer	:Andy Wang

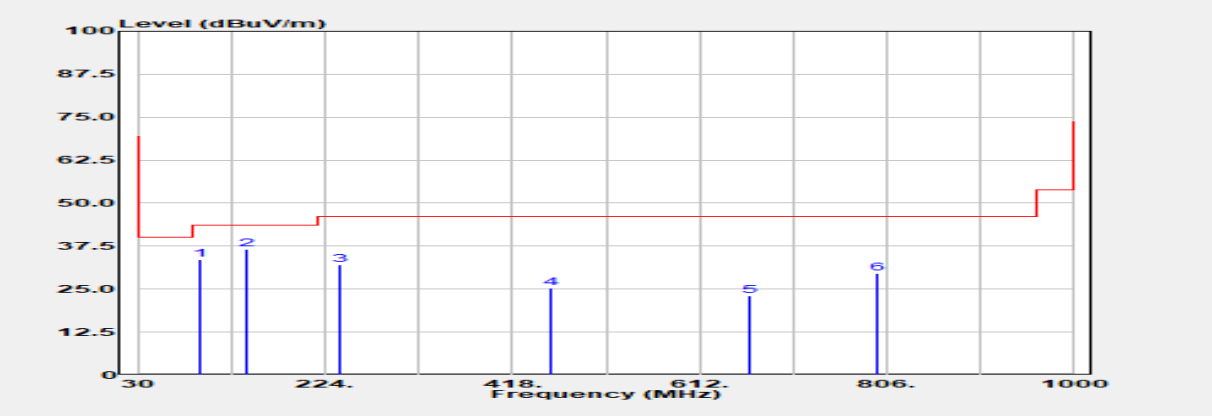

Freq. MHz	Detector Mode PK/QP/AV	Spectrum Reading Level dBμV	Factor dB	Actual dBμV/m	Limit @3m dBμV/m	Margin dB
93.734	Peak	53.40	-19.87	33.53	43.50	-9.97
143.478	Peak	50.94	-14.31	36.63	43.50	-6.87
239.856	Peak	47.27	-15.25	32.02	46.00	-13.98
459.039	Peak	32.98	-7.67	25.31	46.00	-20.69
662.676	Peak	25.75	-2.74	23.00	46.00	-23.00
794.808	Peak	29.97	-0.50	29.47	46.00	-16.53

Unless otherwise stated the results shown in this test report refer only to the sample(s) tested and such sample(s) are retained for 90 days only.
除非另有說明，此報告結果僅對測試之樣品負責，同時此樣品僅保留90天。本報告未經本公司書面許可，不可部份複製。
This document is issued by the Company subject to its General Conditions of Service printed overleaf, available on request or accessible at http://www.sgs.com.tw/Terms-and-Conditions and for electronic format documents, subject to Terms and Conditions for Electronic Documents at http://www.sgs.com.tw/Terms-and-Conditions. Attention is drawn to the limitation of liability, indemnification and jurisdiction issues defined therein. Any holder of this document is advised that information contained hereon reflects the Company's findings at the time of its intervention only and within the limits of Client's instructions, if any. The Company's sole responsibility is to its Client and this document does not exonerate parties to a transaction from exercising all their rights and obligations under the transaction documents. This document cannot be reproduced except in full, without prior written approval of the Company. Any unauthorized alteration, forgery or falsification of the content or appearance of this document is unlawful and offenders may be prosecuted to the fullest extent of the law.

9 FREQUENCY STABILITY

9.1 Applicable Standard

The frequency tolerance of the carrier signal shall be maintained within +/- 0.01% of the operating frequency over a temperature variation of -20 degrees to +50 degrees C at normal supply voltage, and for a variation in the primary supply voltage from 85% to 115% of the rated supply voltage at a temperature of 20 degrees C. For battery operated equipment, the equipment tests shall be performed using a new battery.

Carrier frequency stability shall be maintained to ±0.01% (±100 ppm).
For licence-exempt radio apparatus, the frequency stability shall be measured at temperatures of -20°C (-4°F), +20°C (+68°F) and +50°C (+122°F).

9.2 Measurement Procedure

1. The EUT was placed on a turn table which is 0.8m above ground plane.
2. Set EUT as normal operation
3. Set SPA Center Frequency = fundamental frequency, RBW, VBW= 10kHz, Span =100kHz.
4. Set SPA Max hold. Mark peak.

9.3 Test SET-UP (Block Diagram of Configuration)

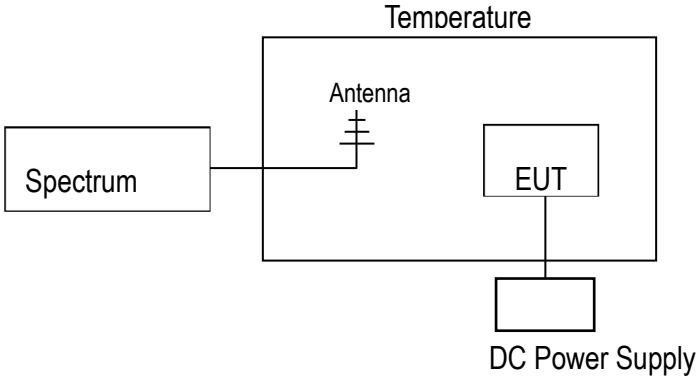

Unless otherwise stated the results shown in this test report refer only to the sample(s) tested and such sample(s) are retained for 90 days only.
除非另有說明，此報告結果僅對測試之樣品負責，同時此樣品僅保留90天。本報告未經本公司書面許可，不可部份複製。
This document is issued by the Company subject to its General Conditions of Service printed overleaf, available on request or accessible at http://www.sgs.com.tw/Terms-and-Conditions and for electronic format documents, subject to Terms and Conditions for Electronic Documents at http://www.sgs.com.tw/Terms-and-Conditions. Attention is drawn to the limitation of liability, indemnification and jurisdiction issues defined therein. Any holder of this document is advised that information contained hereon reflects the Company's findings at the time of its intervention only and within the limits of Client's instructions, if any. The Company's sole responsibility is to its Client and this document does not exonerate parties to a transaction from exercising all their rights and obligations under the transaction documents. This document cannot be reproduced except in full, without prior written approval of the Company. Any unauthorized alteration, forgery or falsification of the content or appearance of this document is unlawful and offenders may be prosecuted to the fullest extent of the law.

9.4 Measurement Results

Startup

A. Temperature Variation

Power Supply Vdc	Environment Temperature (℃)	Frequency (MHz)	Delta (kHz)	Limit (kHz)
5	-20	13.56015	0.15000	+/- 1.356
5	-10	13.56012	0.12000	+/- 1.356
5	0	13.5601	0.10000	+/- 1.356
5	10	13.56008	0.08000	+/- 1.356
5	20	13.56002	0.02000	+/- 1.356
5	30	13.560017	0.01700	+/- 1.356
5	40	13.560014	0.01400	+/- 1.356
5	50	13.560013	0.01300	+/- 1.356

B. Supply Voltage Variation

Power Supply Vdc	Environment Temperature (℃)	Frequency (MHz)	Delta (kHz)	Limit (kHz)
5.75	20	13.56	0.00000	+/- 1.356
5	20	13.56002	0.02000	+/- 1.356
4.25	20	13.5601	0.10000	+/- 1.356

2 minutes

A. Temperature Variation

Power Supply Vdc	Environment Temperature (℃)	Frequency (MHz)	Delta (kHz)	Limit (kHz)
5	-20	13.5602	0.20000	+/- 1.356
5	-10	13.56016	0.16000	+/- 1.356
5	0	13.5601	0.10000	+/- 1.356
5	10	13.56005	0.05000	+/- 1.356
5	20	13.56002	0.02000	+/- 1.356
5	30	13.560017	0.01700	+/- 1.356
5	40	13.560014	0.01400	+/- 1.356
5	50	13.560013	0.01300	+/- 1.356

B. Supply Voltage Variation

Power Supply Vdc	Environment Temperature (℃)	Frequency (MHz)	Delta (kHz)	Limit (kHz)
5.75	20	13.56	0.00000	+/- 1.356
5	20	13.56002	0.02000	+/- 1.356
4.25	20	13.56011	0.11000	+/- 1.356

Unless otherwise stated the results shown in this test report refer only to the sample(s) tested and such sample(s) are retained for 90 days only.
除非另有說明，此報告結果僅對測試之樣品負責，同時此樣品僅保留90天。本報告未經本公司書面許可，不可部份複製。
This document is issued by the Company subject to its General Conditions of Service printed overleaf, available on request or accessible at http://www.sgs.com.tw/Terms-and-Conditions and for electronic format documents, subject to Terms and Conditions for Electronic Documents at http://www.sgs.com.tw/Terms-and-Conditions. Attention is drawn to the limitation of liability, indemnification and jurisdiction issues defined therein. Any holder of this document is advised that information contained hereon reflects the Company's findings at the time of its intervention only and within the limits of Client's instructions, if any. The Company's sole responsibility is to its Client and this document does not exonerate parties to a transaction from exercising all their rights and obligations under the transaction documents. This document cannot be reproduced except in full, without prior written approval of the Company. Any unauthorized alteration, forgery or falsification of the content or appearance of this document is unlawful and offenders may be prosecuted to the fullest extent of the law.

5 minutes

A. Temperature Variation

Power Supply Vdc	Environment Temperature (℃)	Frequency (MHz)	Delta (kHz)	Limit (kHz)
5	-20	13.56015	0.15000	+/- 1.356
5	-10	13.56012	0.12000	+/- 1.356
5	0	13.5601	0.10000	+/- 1.356
5	10	13.56008	0.08000	+/- 1.356
5	20	13.56002	0.02000	+/- 1.356
5	30	13.560017	0.01700	+/- 1.356
5	40	13.560014	0.01400	+/- 1.356
5	50	13.560013	0.01300	+/- 1.356

B. Supply Voltage Variation

Power Supply Vdc	Environment Temperature (℃)	Frequency (MHz)	Delta (kHz)	Limit (kHz)
5.75	20	13.5601	0.10000	+/- 1.356
5	20	13.56008	0.08000	+/- 1.356
4.25	20	13.56007	0.07000	+/- 1.356

10 minutes

A. Temperature Variation

Power Supply Vdc	Environment Temperature (℃)	Frequency (MHz)	Delta (kHz)	Limit (kHz)
5	-20	13.56014	0.14000	+/- 1.356
5	-10	13.56013	0.13000	+/- 1.356
5	0	13.56012	0.12000	+/- 1.356
5	10	13.560091	0.09100	+/- 1.356
5	20	13.560018	0.01800	+/- 1.356
5	30	13.560016	0.01600	+/- 1.356
5	40	13.560013	0.01300	+/- 1.356
5	50	13.560016	0.01600	+/- 1.356

B. Supply Voltage Variation

Power Supply Vdc	Environment Temperature (℃)	Frequency (MHz)	Delta (kHz)	Limit (kHz)
5.75	20	13.5603	0.30000	+/- 1.356
5	20	13.56009	0.09000	+/- 1.356
4.25	20	13.56012	0.12000	+/- 1.356

Unless otherwise stated the results shown in this test report refer only to the sample(s) tested and such sample(s) are retained for 90 days only.
除非另有說明，此報告結果僅對測試之樣品負責，同時此樣品僅保留90天。本報告未經本公司書面許可，不可部份複製。
This document is issued by the Company subject to its General Conditions of Service printed overleaf, available on request or accessible at http://www.sgs.com.tw/Terms-and-Conditions and for electronic format documents, subject to Terms and Conditions for Electronic Documents at http://www.sgs.com.tw/Terms-and-Conditions. Attention is drawn to the limitation of liability, indemnification and jurisdiction issues defined therein. Any holder of this document is advised that information contained hereon reflects the Company's findings at the time of its intervention only and within the limits of Client's instructions, if any. The Company's sole responsibility is to its Client and this document does not exonerate parties to a transaction from exercising all their rights and obligations under the transaction documents. This document cannot be reproduced except in full, without prior written approval of the Company. Any unauthorized alteration, forgery or falsification of the content or appearance of this document is unlawful and offenders may be prosecuted to the fullest extent of the law.

10 EMISSION BANDWIDTH MEASUREMENT

10.1 Applicable Standard:

The 20 dB and 99% bandwidth shall be specified in operating frequency band.

10.2 Test Set-up

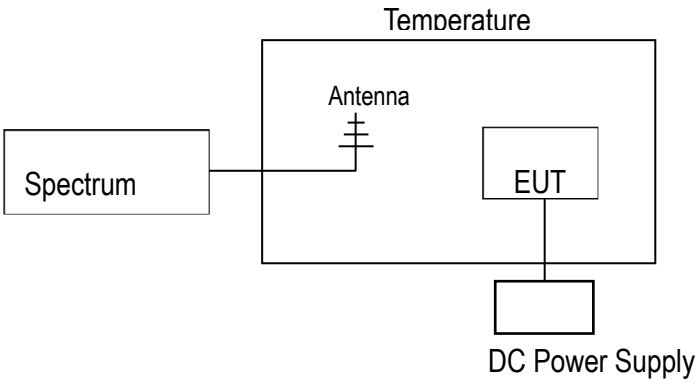

10.3 Measurement Procedure

1. Placed the EUT on the testing table.
2. Set the EUT under transmission condition continuously at specific channel frequency.
3. The resolution bandwidth of 1 kHz and the video bandwidth of 3 kHz were used.
4. Measured the spectrum width with power higher than 20dB below carrier.

10.4 Measurement Result

20dB BW (kHz)
2.702

Opration range	Frequency (MHz)	Limit (MHz)
Low	13.55885	>13.11
High	13.56115	<14.01

99% BW (kHz)
2.297

Unless otherwise stated the results shown in this test report refer only to the sample(s) tested and such sample(s) are retained for 90 days only.
除非另有說明，此報告結果僅對測試之樣品負責，同時此樣品僅保留90天。本報告未經本公司書面許可，不可部份複製。
This document is issued by the Company subject to its General Conditions of Service printed overleaf, available on request or accessible at http://www.sgs.com.tw/Terms-and-Conditions and for electronic format documents, subject to Terms and Conditions for Electronic Documents at http://www.sgs.com.tw/Terms-and-Conditions. Attention is drawn to the limitation of liability, indemnification and jurisdiction issues defined therein. Any holder of this document is advised that information contained hereon reflects the Company's findings at the time of its intervention only and within the limits of Client's instructions, if any. The Company's sole responsibility is to its Client and this document does not exonerate parties to a transaction from exercising all their rights and obligations under the transaction documents. This document cannot be reproduced except in full, without prior written approval of the Company. Any unauthorized alteration, forgery or falsification of the content or appearance of this document is unlawful and offenders may be prosecuted to the fullest extent of the law.

Bandwidth

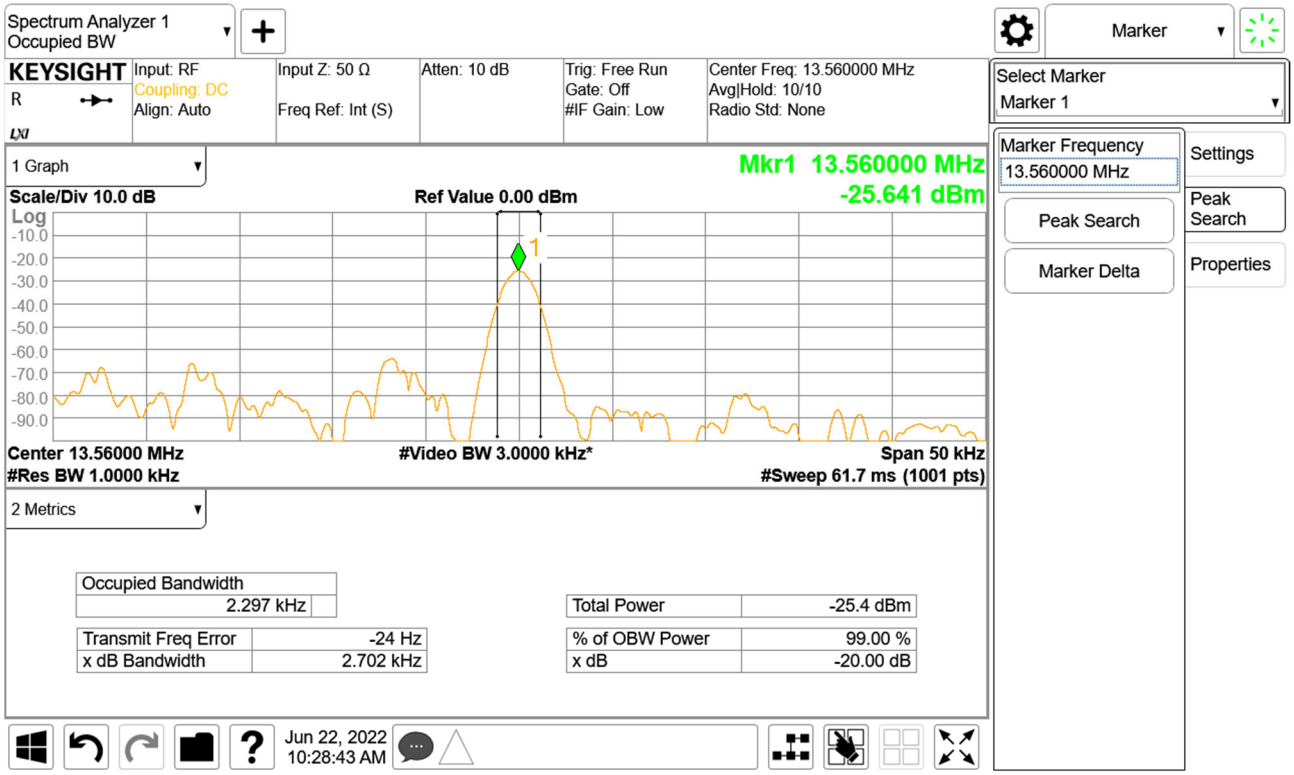

Unless otherwise stated the results shown in this test report refer only to the sample(s) tested and such sample(s) are retained for 90 days only.
除非另有說明，此報告結果僅對測試之樣品負責，同時此樣品僅保留90天。本報告未經本公司書面許可，不可部份複製。
This document is issued by the Company subject to its General Conditions of Service printed overleaf, available on request or accessible at http://www.sgs.com.tw/Terms-and-Conditions and for electronic format documents, subject to Terms and Conditions for Electronic Documents at http://www.sgs.com.tw/Terms-and-Conditions. Attention is drawn to the limitation of liability, indemnification and jurisdiction issues defined therein. Any holder of this document is advised that information contained hereon reflects the Company's findings at the time of its intervention only and within the limits of Client's instructions, if any. The Company's sole responsibility is to its Client and this document does not exonerate parties to a transaction from exercising all their rights and obligations under the transaction documents. This document cannot be reproduced except in full, without prior written approval of the Company. Any unauthorized alteration, forgery or falsification of the content or appearance of this document is unlawful and offenders may be prosecuted to the fullest extent of the law.

Operation range Left

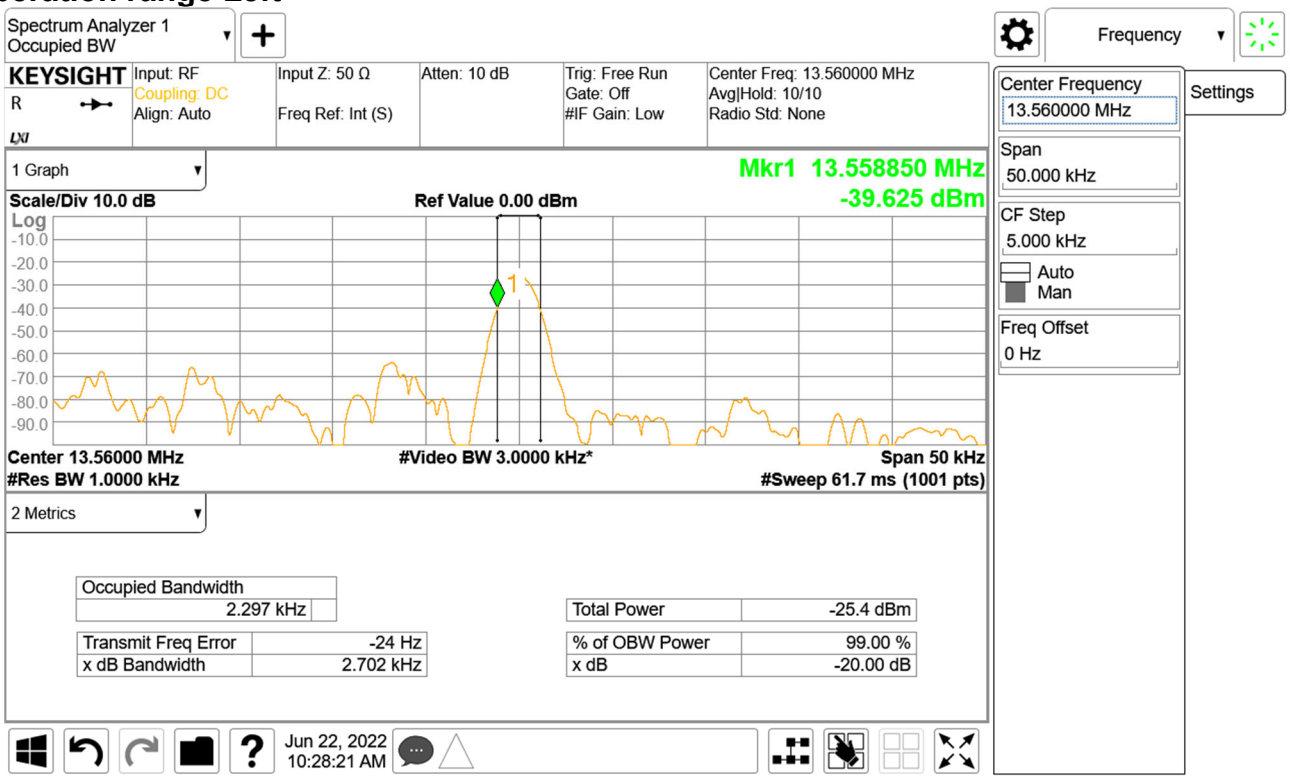

Operation range Right

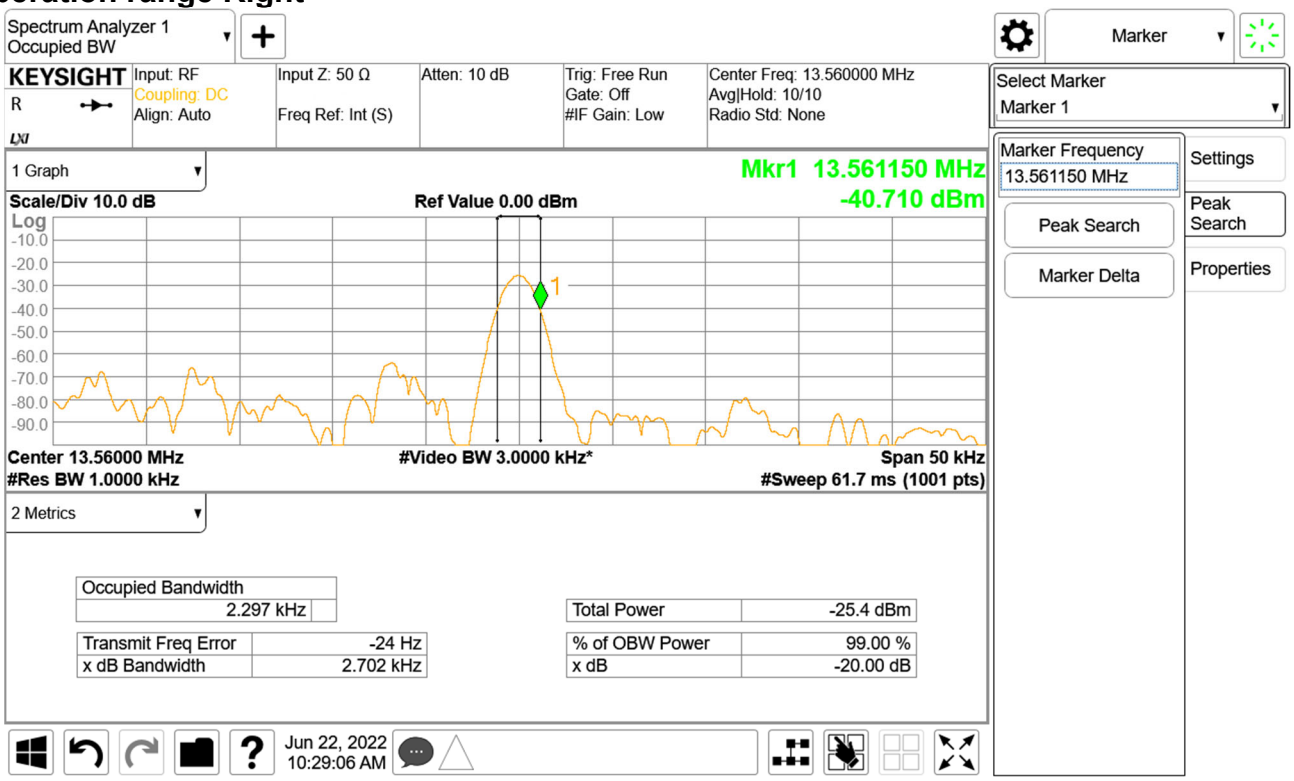

Unless otherwise stated the results shown in this test report refer only to the sample(s) tested and such sample(s) are retained for 90 days only.
除非另有說明，此報告結果僅對測試之樣品負責，同時此樣品僅保留90天。本報告未經本公司書面許可，不可部份複製。
This document is issued by the Company subject to its General Conditions of Service printed overleaf, available on request or accessible at http://www.sgs.com.tw/Terms-and-Conditions and for electronic format documents, subject to Terms and Conditions for Electronic Documents at http://www.sgs.com.tw/Terms-and-Conditions. Attention is drawn to the limitation of liability, indemnification and jurisdiction issues defined therein. Any holder of this document is advised that information contained hereon reflects the Company's findings at the time of its intervention only and within the limits of Client's instructions, if any. The Company's sole responsibility is to its Client and this document does not exonerate parties to a transaction from exercising all their rights and obligations under the transaction documents. This document cannot be reproduced except in full, without prior written approval of the Company. Any unauthorized alteration, forgery or falsification of the content or appearance of this document is unlawful and offenders may be prosecuted to the fullest extent of the law.

11 ANTENNA REQUIREMENT

11.1 Standard Applicable:

An intentional radiator shall be designed to ensure that no antenna other than that furnished by the responsible party shall be used with the device. The use of a permanently attached antenna or of an antenna that uses a unique coupling to the intentional radiator shall be considered sufficient to comply with the provisions of this section. The manufacturer may design the unit so that a broken antenna can be replaced by the user, but the use of a standard antenna jack or electrical connector is prohibited. This requirement does not apply to carrier current devices or to devices operated under the provisions of §§ 15.211, 15.213, 15.217, 15.219, 15.221, or § 15.236. Further, this requirement does not apply to intentional radiators that must be professionally installed, such as perimeter protection systems and some field disturbance sensors, or to other intentional radiators which, in accordance with § 15.31(d), must be measured at the installation site. However, the installer shall be responsible for ensuring that the proper antenna is employed so that the limits in this part are not exceeded.

11.2 Antenna Connected Construction:

The antenna is designed as permanently attached and no consideration of replacement. Please see EUT photo for details.

~ End of Report ~

Unless otherwise stated the results shown in this test report refer only to the sample(s) tested and such sample(s) are retained for 90 days only.
除非另有說明，此報告結果僅對測試之樣品負責，同時此樣品僅保留90天。本報告未經本公司書面許可，不可部份複製。
This document is issued by the Company subject to its General Conditions of Service printed overleaf, available on request or accessible at http://www.sgs.com.tw/Terms-and-Conditions and for electronic format documents, subject to Terms and Conditions for Electronic Documents at http://www.sgs.com.tw/Terms-and-Conditions. Attention is drawn to the limitation of liability, indemnification and jurisdiction issues defined therein. Any holder of this document is advised that information contained hereon reflects the Company's findings at the time of its intervention only and within the limits of Client's instructions, if any. The Company's sole responsibility is to its Client and this document does not exonerate parties to a transaction from exercising all their rights and obligations under the transaction documents. This document cannot be reproduced except in full, without prior written approval of the Company. Any unauthorized alteration, forgery or falsification of the content or appearance of this document is unlawful and offenders may be prosecuted to the fullest extent of the law.