QUICK START Guide

DIGICEL VM1510

Please read this installation guide carefully before you use this product and keep it where you can find easily for future reference.

Safety information

★ Digicel is not responsible for problems caused by misuse of equipment.

★ The appearance and specifications of this product may change to improve performance without notice.

⚠ Precaution

- Place your product on a stable surface.
- Do not disassemble or attempt to repair your product. There may be a risk of fire or electric shock.
- Do not drop or hit your product. This may cause a malfunction or injury.
- Do not leave your product in too high or low temperature for a long time. Doing so may cause an explosion or an electric shock.
- Do not allow water or metal and inflammable matter to enter your product. Doing so may pose a fire hazard.

FCC STATEMENT

Caution : Any changes or modifications in construction of this device which are not expressly approved by the party responsible for compliance could void the user's authority to operate the equipment.

This device complies with Part 15 of the FCC Rules. Operation is subject to the following two conditions:
(1) this device may not cause harmful interference, and
(2) this device must accept any interference received, including interference that may cause undesired operation.

Note : This equipment has been tested and found to comply with the limits for a Class B digital device, pursuant to part 15 of the FCC Rules. These limits are designed to provide reasonable protection against harmful interference in a residential installation This equipment generates, uses and can radiate radio frequency energy and, if not installed and used in accordance with the instructions, may cause harmful interference to radio communications, However, there is no guarantee that interference will not occur in a particular installation. If this equipment does cause harmful interference to radio or television reception, which can be determined by turning the equipment off and on, the user is encouraged to try to correct the interference by one or more of the following measures:

- Reorient or relocate the receiving antenna.
- Increase the separation between the equipment and receiver.
- Connect the equipment into an outlet on a circuit different from that to which the receiver is connected.
- Consult the dealer or an experienced radio/TV technician for help.

Changes or modifications not expressly approved by the party responsible for compliance could void the user's authority to operate the equipment. Indoor use only.

This appliance and its antenna must not be co-located or operation in conjunction with any other antenna or transmitter. A minimum separation distance of 20 ㎝ must be maintained between the antenna and the person for this appliance to satisfy the RF exposure requirements

Installation

Front Panel

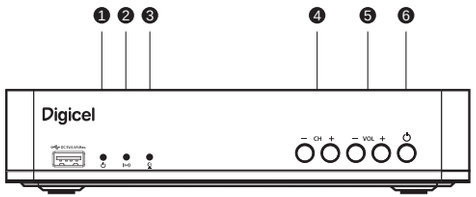

1 **Power indicator (⏻)**
The indicator light turns red when the power turns on.

2 **Remote control signal sensor (((•)))**
Do not block IR receiver, so that you can use the remote control properly.

3 **Lock indicator (🔒)**

4 **CH**
Channel Up/Down (up and down key)

5 **VOL**
Volume Up/Down (up and down key)

6 **POWER**
Switch the receiver power "ON" or "OFF".

Installation

Rear Panel

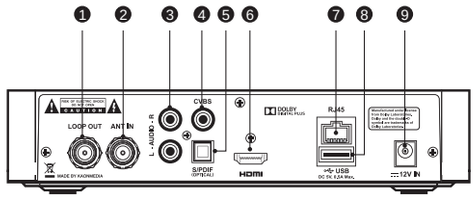

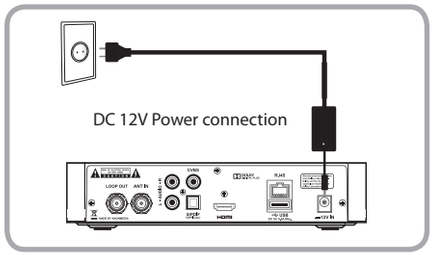

1 **LOOP OUT**
Used to connect an antenna signal from the receiver to either the antenna input jack on your television or to another receiver.

2 **ANT IN**

3 **AUDIO**
Audio connection port to the TV or other equipment.

4 **CVBS**
Video connection port to the TV or other equipment.

5 **S/PDIF**
Connect a digital amplifer output.

6 **HDMI**
Connect your decoder to an HDTV set with an HDMI cable

7 **ETHERNET**
Connect the LAN cable to Ethernet port.

8 **USB**
Connect the USB memory device to USB port

9 **DC 12V IN**
To connect your decoder to the main power supply.

3305-00550_MANUAL_DIGICEL_QUICK GUIDE_ENG_.indd 1 2014-11-24 1:29:06

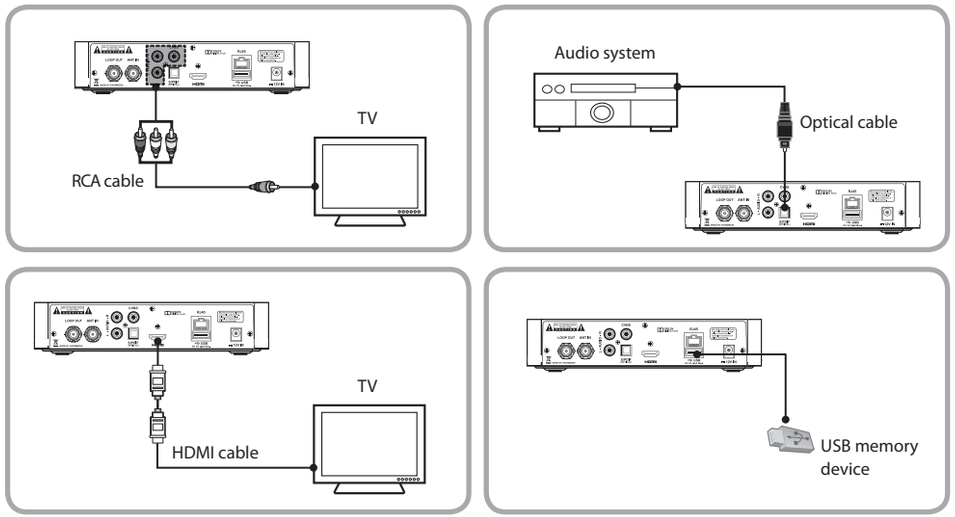

Specifications

Chipset	Broadcom / BCM7584
Flash Memory	4MB NOR, 512MB NAND
Program DRAM	512MB DDR3
Wi-Fi	Embedded support 2T2R (802.11a/b/g/n, 2.4/5Ghz Selectable Band)
F/W Upgrade	USB / IP (Automatic/manual)

Codec	• Video - MPEG-2, MPEG-4/H.264/AVC - Dual 1080i decode or 1080p60 decode • Audio - AC-3 (Dolby Digital), Dolby Digital Plus - MPEG-1 layers 1,2 and 3 (MP3)
Front Input Connectors & LED	• 5 Keys (CH+, CH-,Vol+, Vol -, Power) • 3 LEDs - Power (On: Red) - IR Indicator (On: Yellow) - Lock Indicator (On: Green)
Rear Output Connectors	• USB 2.0 • HDMI 1.3 • RJ45 • S/PDIF (Optical) • CVBS, Cable in & Loop
Physical Specification	• Size(W*H*D) 200mmx40mmx140mm

Using the remote control

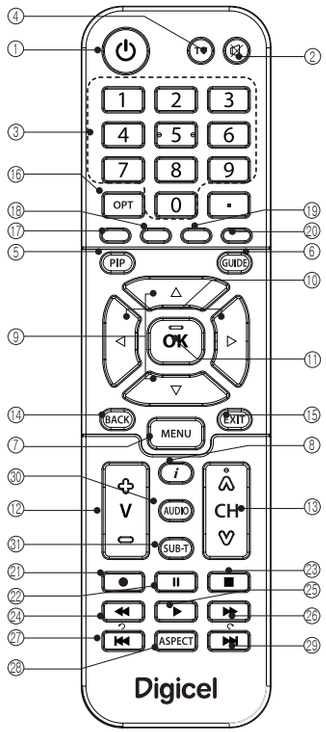

1 **STAND BY**
To switch between operation and stand by mode.

2 **MUTE**
To enable or disable audio.

3 **NUMERIC BUTTONS**
To select the channel and enter the channel edit and PIN code.

4 **TV**

5 **PIP**

6 **GUIDE**
Activate the program guide (EPG) in the window.

7 **MENU**
To display the Main Menu on the screen or return to the previous menu.

8 **i**
Displays the information box in the normal viewing mode.

9 **Up/Down**
To move up or down on the menu.

10 **Left/Right**
To move left or right on the menu.

11 **OK**
To confirm your choice.

12 **VOLUME UP/DOWN**
To increase or decrease the volume.

13 **CHANNEL UP/DOWN**
To change channel up and down.

14 **BACK**
Press to go on step back.

15 **EXIT**
To return the normal viewing mode from a menu.

16 **OPT**
To set the video output.
Switch to TP/Satellite in Search Setup.

17 **Red button**
18 **Green button**
19 **Yellow button**
20 **Blue button**
To select shortcuts in menu or tv list, info banner.

21 **Record**
Saves the current channel to the external HDD.

22 **Pause**
Used for pausing files.

23 **Stop**
Used for stopping record or play.

24 **REW**
Used for rewinding.

25 **Play**
Used for playing files.

26 **FF**
Used for fast forward.

27 **Pre File**
To play the pre file in pvr.

28 **ASPECT**

29 **Next File**
To play the next file in pvr.

30 **AUDIO**
To select the sound mode.
(Mono, Left, Right, Stereo)

31 **SUB-T**
To enable or disable subtitle or change the channel list mode.

3305-00550_MANUAL_DIGICEL_QUICK GUIDE_ENG_.indd 2 2014-11-24 1:29:08