2. Installation Steps

You can install this receiver as per the following installation steps. If you have some questions regarding installation, please consult your 08008 DOLCE (08008 36523).

2.1 Connecting HDMI cable

Connect the receiver to a TV with HDMI jack, if your TV is equipped for it.

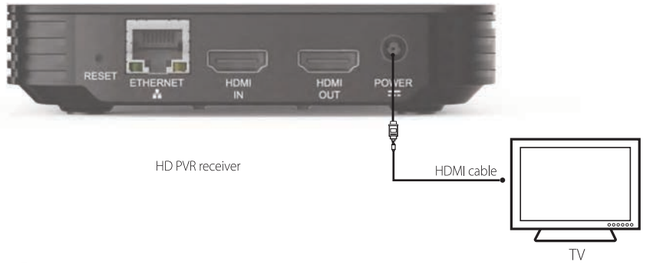

HDMI, or high-definition multimedia interface, is a next-generation interface that enables the transmission of digital audio and video signals using a single cable without compression. "Multimedia interface" is a more accurate name for it especially because it allows multiple channels of digital audio (5.1 channels). When connecting via HDMI, you do not need to connect Audio Cables. You only need to connect Audio cables when connecting via HDMI/DVI.

2.2 Connecting the Antenna

Connect one end of the antenna cable to the ANT IN on the back of the receiver and the other end to a terrestrial antenna connection or the jack for the public antenna on the wall.

2.3 Connecting Power cable

Connect the Power cable with the receiver as well as the electric socket.

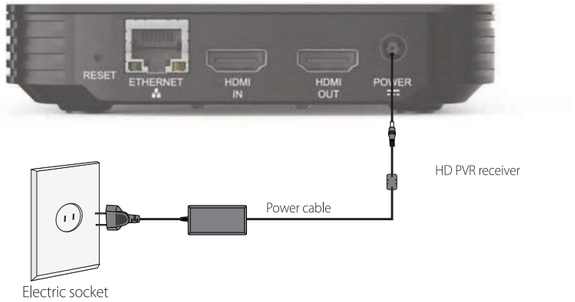

2.4 Turning On and Off Your Receiver

Power On / Off

Press the **STANDBY** button on the front of the receiver or on the remote control.

2.5 Connecting other equipments

2.5.1 Connecting Audio & Video cable

If you have Audio cable and Video cable(CVBS or YPbPr), you can watch TV by connecting them with TV and the receiver.

2.5.2 Connecting the receiver with VCR

You can connect the receiver with VCR by using Scart cable or Audio & Video cable.

2.5.3 Connecting the receiver with Audio System

You can connect the receiver with Audio System by using audio cable.

* Installation Notice

If degraded picture quality is observed while viewing copy-protected pay-per-view programs, connect the set-top box directly to the TV set. Do not connect through a VCR.

DOLBY AUDIO™

Manufactured under license from Dolby Laboratories. Dolby, Dolby Audio, and the double-D symbol are trademarks of Dolby Laboratories.

HDMI™
HIGH DEFINITION MULTIMEDIA INTERFACE

The terms HDMI and HDMI High-Definition Multimedia Interface, and the HDMI Logo are trademarks or registered trademarks of HDMI Licensing LLC in the United States and other countries.

Installation Guide

T-MOBILE MINI_ VM3011C

Please read the entire manual thoroughly and retain it for future reference.

Important safety instructions

Cautions

CAUTION : To reduce the risk of electrical shock, do not remove the cover. No user serviceable parts inside. Refer any servicing to qualified Service personnel.

Read this manual carefully before using the product. The cautions described below contain important information about safety, The company will not take any responsibility for accidents or damage resulting from careless handling by the user.

This item incorporates copyright protection technology that is protected by U.S. patents and other intellectual property rights. Use of this copyright protection technology must be authorized by Rovi Corporation, and is intended for home and other limited viewing uses only unless otherwise authorized by Rovi Corporation. Reverse engineering or disassembly is prohibited.

FCC Part 15.19 Statements

This device complies with Part 15 of the FCC Rules. Operation is subject to the following two conditions:
(1) this device may not cause harmful interference, and
(2) this device must accept any interference received, including interference that may cause undesired operation.

FCC Part 15.105 statement

This equipment has been tested and found to comply with the limits for a Class B digital device, pursuant to part 15 of the FCC Rules.
These limits are designed to provide reasonable protection against harmful interference in a residential installation. This equipment generates, uses and can radiate radio frequency energy and, if not installed and used in accordance with the instructions, may cause harmful interference to radio communications. However, there is no guarantee that interference will not occur in a particular installation. If this equipment does cause harmful interference to radio or television reception, which can be determined by turning the equipment off and on, the user is encouraged to try to correct the interference by one or more of the following measures:
- Reorient or relocate the receiving antenna.
- Increase the separation between the equipment and receiver.
- Connect the equipment into an outlet on a circuit different from that to which the receiver is connected.
- Consult the dealer or an experienced radio/TV technician for help.

FCC Part 15.21 statementt

Any changes or modifications not expressly approved by the party responsible for compliance could void the user's authority to operate this equipment.

RF Exposure Statement (MPE)

The antenna(s) must be installed such that a minimum separation distance of at least 20 cm is maintained between the radiator (antenna) and all persons at all times. This device must not be co-located or operating in conjunction with any other antenna or transmitter.

Important Safety Instructions

1. Read these instructions.
2. Keep these instructions.
3. Heed all warnings.
4. Follow all instructions.
5. Do not use this apparatus near water.
6. Clean only with a dry cloth.
7. do not block any of the ventilation openings. Install in accordance with the manufacturer's instructions.
8. Do not install near any heat sources such as radiators, heat registers, stoves, or other apparatus (including amplifiers) that produce heat.
9. Do not defeat the safety purpose of the polarized or grounding type plug. A polarized plug has two blades and a third grounding prong. The wide blade or the third prong is provided fot your safety. When the provided plug does not fit into your outlet, consult an electrician for replacement of the obsolete outlet.
10. Protect the power cord from being walked on or pinched particularly at plugs, convenience receptacles, and the point where they exit from the apparatus.
11. only use the attachments/accessories specified by the manufacturer.
12. Use only with a cart, stand, tripod, bracket, or table specified by the manufacturer, or sold with the apparatus. When a cart is used, use caution when moving the cart/apparatus combination to avoid injury from tip-over.

13. Unplug this apparatus during lightning storms or when unused for long periods of time.
14. Refer all servicing to qualified service perxonnel. Servicing is required when the apparatus has been damaged in any way, such as power supply cord or plug is damaged, liquid has been spilled or objects have fallen into the apparatus, the apparatus has been exposed to rain or moisture, does not poerate normally, or has been dropped.

1. Introduction

1.1 Front Panel

1	**USB**	Connect to USB Mass storage device for S/w upgrade.
2	**SELECT**	Select item of menu.
3	**POWER LED**	Inform the power status.

The front of the product is subject to change without notice.

1.2 Rear Panel

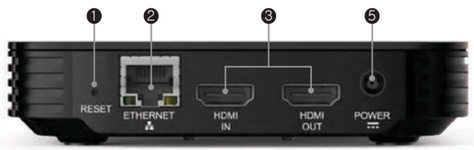

1	**RESET**	Settop box system reset.
2	**ETHERNET**	Inform the ethernet status.
3	**HDMI**	Use the HDMI cable to connect this jack to the HDMI jack on your television for the best quality picture
4	**POWER**	To connect yout decoder to the mains power supply.

* Product Notice

This item incorporates copy protection technology that is protected by U.S. patents and other intellectual property rights of Rovi Corporation. Reverse engineering and disassembly are prohibited.

The design of the Front/Rear Panel may be changed without any notice in advance.