OPERATING INSTRUCTIONS

RFH5xx

RFID read/write device (HF)

SICK
Sensor Intelligence.

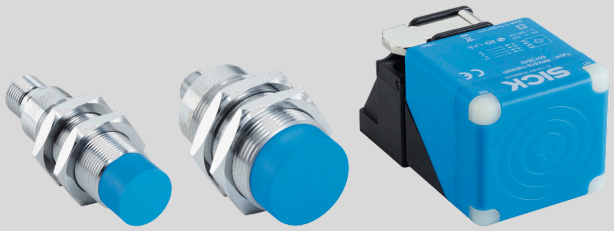

Described product

RFH505-1004301

RFH510-1004301

RFH515-1004301

Manufacturer

SICK AG
Erwin-Sick-Str. 1
79183 Waldkirch
Germany

Legal information

This work is protected by copyright. Any rights derived from the copyright shall be reserved for SICK AG. Reproduction of this document or parts of this document is only permissible within the limits of the legal determination of Copyright Law. Any modification, abridgment or translation of this document is prohibited without the express written permission of SICK AG.

The trademarks stated in this document are the property of their respective owner.

© SICK AG. All rights reserved.

Original document

This document is an original document of SICK AG.

Conformities

Due to the country-specific approvals for the device, the respective conformance information is type-dependent. For the specific device that you have, see the online type-specific data sheet at:

- www.sick.com/RFH5xx

The type designation of your device is either laser-engraved or printed on the device above the electrical connection.

Contents

1 About this document 5
1.1 Information on the operating instructions 5
1.2 Scope 5
1.3 Explanation of symbols 6
1.4 Further information 6
1.5 SICK service 7

2 Safety information 8
2.1 Intended use 8
2.2 Improper use 9
2.3 Limitation of liability 9
2.4 Modifications and conversions 9
2.5 Requirements for skilled persons and operating personnel 10
2.6 Operational safety and particular hazards 10
2.7 Repairs 11

3 Product description 12
3.1 Product ID 12
3.2 Product characteristics 15

4 Transport and storage 23
4.1 Transport 23
4.2 Unpacking 23
4.3 Transport inspection 23
4.4 Storage 23

5 Mounting 25
5.1 Overview of mounting procedure 25
5.2 Preparation for mounting 25
5.3 Mounting location 27
5.4 Mounting the device 27

6 Electrical installation 31
6.1 Safety 31
6.2 Wiring instructions 32
6.3 Pin assignments of electrical connections 32
6.4 Prerequisites 33
6.5 Behavior of the device when switched on 33

7 Commissioning 34
7.1 Overview of the commissioning steps 34

8 Operation 36
8.1 Operating options 36
8.2 Optical status indicators 36

8.3 Operation via IO-Link 38

9 Maintenance 47
9.1 Maintenance plan 47
9.2 Cleaning 47

10 Troubleshooting 48
10.1 Overview of Potential Errors and Faults 48
10.2 SICK service 49
10.3 Repairs 49
10.4 Returns 49
10.5 Replacing a device with transfer of the current configuration data 49

11 Decommissioning 51
11.1 Disposal 51

12 Technical data 52
12.1 Features 52
12.2 Interfaces 52
12.3 Mechanics and electronics 53
12.4 Ambient data 55
12.5 Working range diagrams 56
12.6 Dimensional drawing 56

13 Accessories 57

14 Annex 58
14.1 EU declaration of conformity/Certificates 58
14.2 Dimensional drawings (electronic) 58
14.3 Abbreviations used 58

1 About this document

1.1 Information on the operating instructions

These operating instructions provide important information on how to use devices from SICK AG.

Prerequisites for safe work are:

- Compliance with all safety notes and handling instructions supplied.
- Compliance with local work safety regulations and general safety regulations for device applications

The operating instructions are intended to be used by qualified personnel and electrical specialists.

NOTE
Read these operating instructions carefully to familiarize yourself with the device and its functions before commencing any work.

The operating instructions are an integral part of the product. Store the instructions in the immediate vicinity of the device so they remain accessible to staff at all times. Should the device be passed on to a third party, these operating instructions should be handed over with it.

These operating instructions do not provide information on operating the machine or system in which the device is integrated. For more information, refer to the operating instructions of the specific machine or system.

1.2 Scope

These operating instructions serve to incorporate the device into a customer system.

NOTE
The operating instructions are supplemented by the following documents, of which hard copies are enclosed with the device:

- Safety notes
- Technical Information RFH5xx Regulatory Compliance. Purpose see "Intended use", page 8.
- Type label technical information

The Technical Information RFH5xx Regulatory Compliance can also be downloaded from the following website:

- **www.sick.com/RFH5xx**

Step-by-step procedures are given for all required actions in the operating instructions.

These operating instructions apply to all available device variants of the product. Functions specific to special devices are, where necessary, described in additional documents.

More detailed information for identification of the available device type see "Type code", page 13.

The available device types are listed on the online product page at:

- **www.sick.com/RFH5xx**

Commissioning is described in the operating instructions using one particular device variant as an example. Commissioning is based on the default setting of the device parameters. Other device variants are commissioned in the same way. Reading a transponder on an object serves as the basis for a simple application.

The terms “transponder” and “tag” for the data media used mean the same thing.

1.3 Explanation of symbols

Warnings and important information in this document are labeled with symbols. Signal words introduce the instructions and indicate the extent of the hazard. To avoid accidents, damage, and personal injury, always comply with the instructions and act carefully.

DANGER
... indicates a situation of imminent danger, which will lead to a fatality or serious injuries if not prevented.

WARNING
... indicates a potentially dangerous situation, which may lead to a fatality or serious injuries if not prevented.

CAUTION
... indicates a potentially dangerous situation, which may lead to minor/slight injuries if not prevented.

NOTICE
... indicates a potentially harmful situation, which may lead to material damage if not prevented.

NOTE
... highlights useful tips and recommendations as well as information for efficient and trouble-free operation.

1.4 Further information

NOTE
Further documentation for the device can be found on the online product page at:

- www.sick.com/RFH5xx

There, additional information has been provided depending on the product, such as:

- Model-specific online data sheets for device types, containing technical data, dimensional drawing, and specification diagrams
- EU declarations of conformity for the product family
- Certificates of the product family
- Dimensional drawings and 3D CAD dimension models of the device types in various electronic formats
- Other publications related to the devices described here
- Publications dealing with accessories

1.5 SICK service

If you require any technical information, our SICK Service will be happy to help. To find your agency, see the final page of this document.

NOTE
Before calling, make a note of all type label data such as type code, serial number, etc., to ensure faster processing.

2 Safety information

2.1 Intended use

The RFH5xx RFID read/write devices (HF) are intelligent ID sensors from the RFH product family. Version (working range): Short Range.

As compact read/write devices, the housing contains an integrated antenna as well as an IO-Link interface. The stationary device automatically processes all common passive ISO/IEC 15693-compatible transponders on moving or stationary objects with carrier frequency 13.56 MHz.

The devices are used in a control system with coordinating PLC. To do so, the device is integrated into the fieldbus system of the control system with the help of a respective IO-Link master.

The PLC controls the read and write tasks of the devices using the process data.

The various device variants of the RFH5xx offer different working ranges, housing shapes and mounting options.

The devices allow operation within a wide ambient temperature range.

The devices are primarily designed for use in industrial and logistics areas, and they meet the requirements for industrial durability, interfaces and data processing when operated properly.

Approvals and country-specific operating conditions

NOTE
The devices are certified in individual countries or in groups of countries (region, e.g. Europe). The devices may be subject to country-specific operating conditions, see

- Technical Information RFH5xx Regulatory Compliance (part number 8025651)

A printed version of the document is included with the device.

When operating the device in other countries without approval, no interference from other frequency ranges can occur thanks to the globally-harmonized frequency (13.56 MHz). However, use in countries without approval is still forbidden.

Observe the following when operating the device:

- Only use the device in countries in which it has been approved.
- For country-specific operation conditions of the device, observe the specifications in the Technical Information RFH5xx Regulatory Compliance.
- When reselling the device, inform the buyer about the country-specific operating conditions.
- If the device is passed on to a third party, also hand over the operating instructions and the Technical Information RFH5xx Regulatory Compliance.

SICK AG assumes no liability for losses or damage arising from the use of the product, either directly or indirectly. This applies in particular to use of the product that does not conform to its intended purpose and is not described in this documentation.

2.1.1 Conditions for specified enclosure rating

To ensure compliance with the specified IP67 or IP68 enclosure rating of the device variants, the following requirements must be met.

- The head of the IO-Link is attached to the electrical M12 connecting cable and tightly fastened.

If these requirements are not met, the device does not fulfill any specified enclosure rating.

2.1.2 Regulatory notes

See Technical Information RFH5xx Regulatory Compliance (part number 8025651). A printed version of the document is included with the device.

2.2 Improper use

Any use outside of the stated areas, in particular use outside of the technical specifications and the requirements for intended use, will be deemed to be incorrect use.

- The device does not constitute a safety component in accordance with the respective applicable safety standards for machines.
- The device must not be used in explosion-hazardous areas, in corrosive environments or under extreme environmental conditions.
- Any use of accessories not specifically approved by SICK AG is at your own risk.

WARNING
Danger due to improper use!

Any improper use can result in dangerous situations.

Therefore, observe the following information:

- Product should be used only in accordance with its intended use.
- All information in these operating instructions must be strictly observed.
- Shut down the product immediately in case of damage.

2.3 Limitation of liability

Relevant standards and regulations, the latest technological developments, and our many years of knowledge and experience have all been taken into account when compiling the data and information contained in these operating instructions. The manufacturer accepts no liability for damage caused by:

- Non-adherence to the product documentation (e.g., operating instructions)
- Incorrect use
- Use of untrained staff
- Unauthorized conversions or repair
- Technical modifications
- Use of unauthorized spare parts, consumables, and accessories

With special variants, where optional extras have been ordered, or owing to the latest technical changes, the actual scope of delivery may vary from the features and illustrations shown here.

2.4 Modifications and conversions

NOTICE
Modifications and conversions to the device may result in unforeseeable dangers.

Interrupting or modifying the device or SICK software will invalidate any warranty claims against SICK AG. This applies in particular to opening the housing, even as part of mounting and electrical installation.

2.5 Requirements for skilled persons and operating personnel

WARNING
Risk of injury due to insufficient training.

Improper handling of the device may result in considerable personal injury and material damage.

- All work must only ever be carried out by the stipulated persons.

This product documentation refers to the following qualification requirements for the various activities associated with the device:

- **Instructed personnel** have been briefed by the operator about the tasks assigned to them and about potential dangers arising from improper action.
- **Skilled personnel** have the specialist training, skills, and experience, as well as knowledge of the relevant regulations, to be able to perform tasks delegated to them and to detect and avoid any potential dangers independently.
- **Electricians** have the specialist training, skills, and experience, as well as knowledge of the relevant standards and provisions, to be able to carry out work on electrical systems and to detect and avoid any potential dangers independently. The electrician must comply with the provisions of the locally applicable work safety regulation.

The following qualifications are required for various activities:

Table 1: Activities and technical requirements

Activities	Qualification
Mounting, maintenance	▪ Basic practical technical training ▪ Knowledge of the current safety regulations in the workplace
Electrical installation, device replacement	▪ Practical electrical training ▪ Knowledge of current electrical safety regulations ▪ Knowledge of the operation and control of the devices in their particular application
Commissioning, configuration	▪ Basic knowledge of the computer operating system used ▪ Basic knowledge of the design and setup of the described connections and interfaces ▪ Basic knowledge of data transmission ▪ Basic knowledge of RFID technology (identification with radio-based data cards)
Operation of the device for the particular application	▪ Knowledge of the operation and control of the devices in their particular application ▪ Knowledge of the software and hardware environment for the particular application

2.6 Operational safety and particular hazards

Please observe the safety notes and the warnings listed here and in other chapters of this product documentation to reduce the possibility of risks to health and avoid dangerous situations.

WARNING
Electrical voltage!

Electrical voltage can cause severe injury or death.

- Work on electrical systems must only be performed by qualified electricians.
- The power supply must be disconnected when attaching and detaching electrical connections.
- The product must only be connected to a voltage supply as set out in the requirements in the operating instructions.
- National and regional regulations must be complied with.
- Safety requirements relating to work on electrical systems must be complied with.

WARNING
Risk of injury and damage caused by potential equalization currents!

Improper grounding can lead to dangerous equipotential bonding currents, which may in turn lead to dangerous voltages on metallic surfaces, such as the housing. Electrical voltage can cause severe injury or death.

- Work on electrical systems must only be performed by qualified electricians.
- Follow the notes in the operating instructions.
- Install the grounding for the product and the system in accordance with national and regional regulations.

WARNING
Health hazard as a result of high-frequency electromagnetic radiation!

The device corresponds to RED directive 2014/53 / EU. During operation, the human exposure regulations covered by EN 50364 must be observed.

- Limit human exposure to electromagnetic fields. Suitable safety distances must be maintained during both short-term and long-term work in the radiation range of the antenna integrated into the device.
- During operation, a safety distance of at least xx cm must be maintained between the antenna and the human body.

WARNING
High-frequency electromagnetic radiation!

RFID read/write devices work with high-frequency electromagnetic radiation. You can find information on arising dangers and required protective measures in the associated operating instructions.

2.7 Repairs

Repair work on the device may only be performed by qualified and authorized personnel from SICK AG. Interruptions or modifications to the device by the customer will invalidate any warranty claims against SICK AG.

3 Product description

3.1 Product ID

3.1.1 Type label

Product information such as the device type, conformity mark and technical data, among others, can be found on the device.

- RFH505, RFH510: The data is laser-engraved above the electrical connection.
- RFH515: The data is printed on the front side of the device.

Exact position see "Device view", page 15.

RFH505

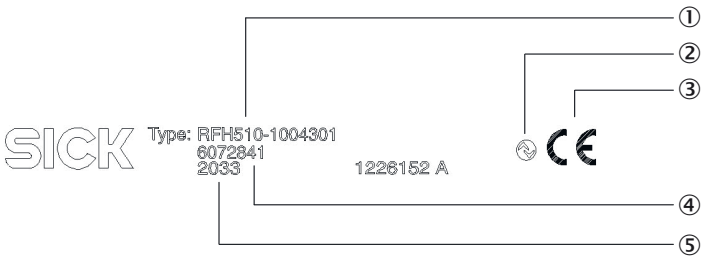

Figure 1: RFH505: examples for product identification data, see the device for relevant data

① Device ID in accordance with type code
② IO-Link symbol
③ Conformity symbol for Europe
④ Part number
⑤ Date of manufacture (year, calendar week)

RFH510

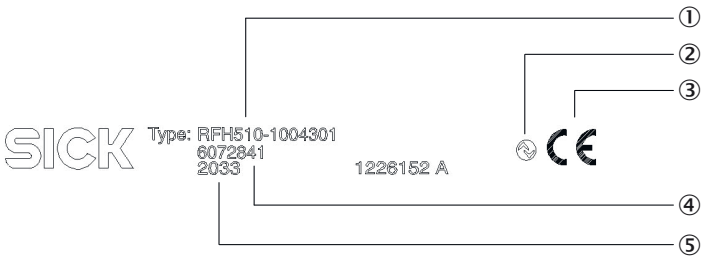

Figure 2: RFH510: examples for product identification data, see the device for relevant data

① Device ID in accordance with type code
② IO-Link symbol
③ Conformity symbol for Europe
④ Part number
⑤ Date of manufacture (year, calendar week)

RFH515

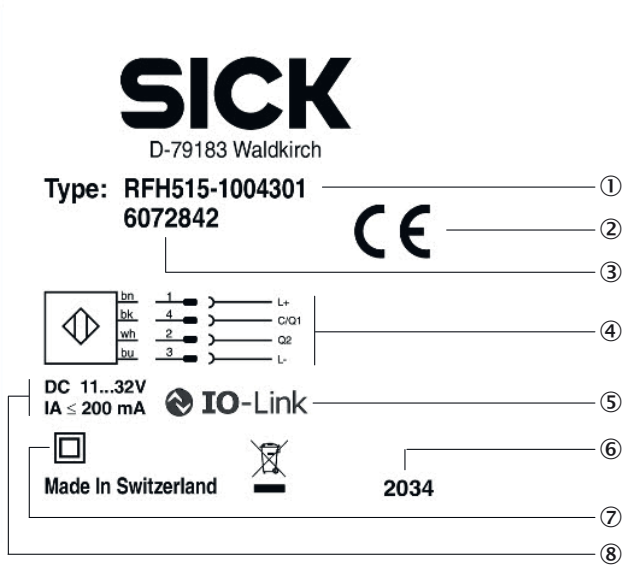

Figure 3: RFH515: examples for product identification data, see the device for relevant data

① Device ID in accordance with type code
② Conformity symbol for Europe
③ Part number
④ Block diagram for IO-Link
⑤ Symbol and writing for IO-Link
⑥ Date of manufacture (year, calendar week)
⑦ Symbol for protection class 2
⑧ Supply voltage and current consumption

Device type-dependent: For other data, see the supplied printed document entitled **Type label technical information**:

- Supply voltage
- Total current output of both digital outputs
- Protection class
- Block diagram for IO-Link
- Data for IO-Link
- Device diameter and minimum distances with parallel mounting

3.1.2 Type code

The devices of the RFH5xx product family are arranged according to the following type code:

RFHxyz-abcdefgh

R	F	H	x	y	z	–	a	b	c	d	e	f	g
1	2	3	4	5	6		7	8	9	10	11	12	13

Position	Description	Characteristic
1 ... 2	RF (Radio Frequency Identification)	–
3	Frequency band	H: HF (13.56 MHz)
4 ... 6	Product family/Working range	505: max. 35 mm (Short Range) 510: max. 60 mm (Short Range) 515: max. 80 mm (Short Range)

Position	Description	Characteristic
7	Antenna	1: with integrated antenna
8	Connection of external antenna	0: no connection
9	Memory card	0: no memory card
10	Connection type	4: IO-Link (1 male connector, M12, 4-pin, A-coded)
11	Host interface	3: IO-Link V1.1
12 ... 13	Application	01: worldwide

NOTE

Not all combinations are possible according to the type code. The available device variants can be found online at:

- www.sick.com/RFH5xx

3.1.2.1 Device variants

The RFH5xx product family consists of 3 device variants:

- RFH505-1004301
- RFH510-1004301
- RFH515-1004301

The device variants differ with respect to the following features:

Table 2: Differences between the device variants

Feature	RFH505-1004301	RFH510-1004301	RFH515-1004301
Write/Read range [1]	Max. 35 mm	Max. 60 mm	Max. 80 mm
Optical indicators	4 x LEDs, identical display function for events during operation		4 x LEDs, each with different display function for events during operation with fixed assignment
Housing design	Cylindrical		Cubic
Housing material	Metal and plastic		Plastic
Enclosure rating	IP67		IP68
Design	M18	M30	C44
Dimensions	M18 x 63.5 mm	M30 x 63.5 mm	40 x 40 x 40 mm^3
Weight	37 g	87 g	108 g [2]

1) With plane-parallel alignment of the RFID transponder (disk 50 mm, part number 6033781) to the device cap. Reading distance achieved depends on dimensions and quality of the transponder.
2) Including clamping bracket

3.2 Product characteristics

3.2.1 Device view

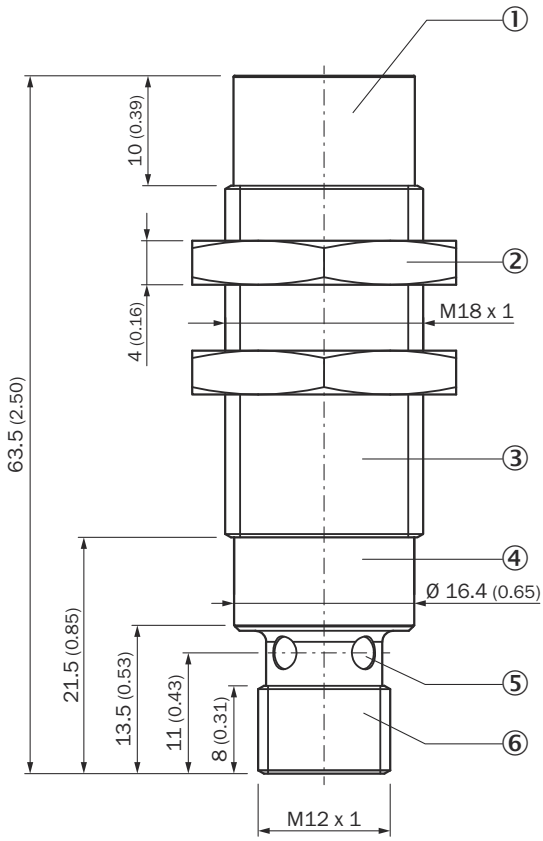

Figure 4: RFH505: Structure and dimensions, unit: mm (inch), decimal separator: period

① Cap with integrated antenna

② 2 x fixing nuts, width across flats SW 24

③ Male thread (M18)

④ Field for product identification data

⑤ 4 x LED, multi-colored (process feedback)

⑥ IO-Link connection (male connector, M12, 4-pin, A-coded)

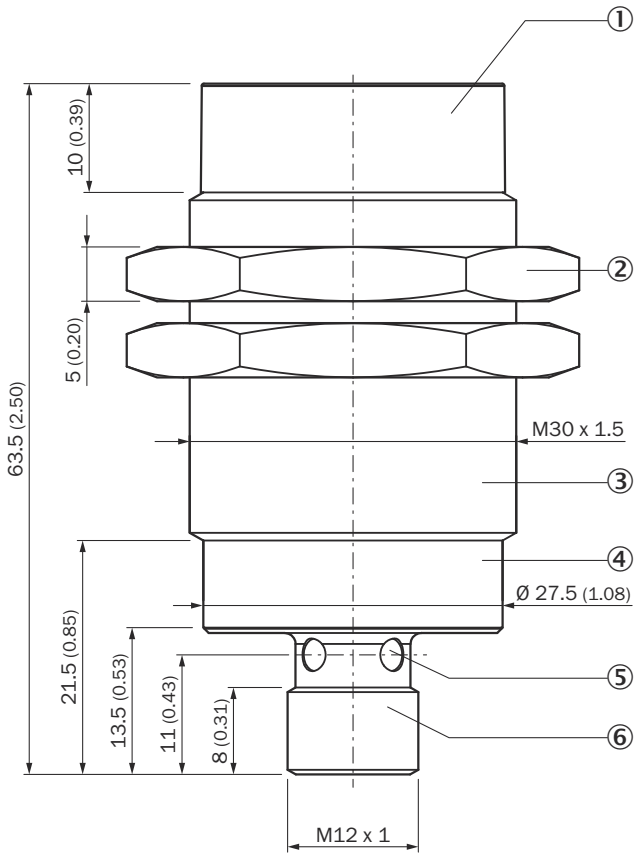

Figure 5: RFH510: Structure and dimensions, unit: mm (inch), decimal separator: period

① Cap with integrated antenna

② 2 x fixing nuts, width across flats SW 36

③ Male thread (M30)

④ Field for product identification data

⑤ 4 x LED, multi-colored (process feedback)

⑥ IO-Link connection (male connector, M12, 4-pin, A-coded)

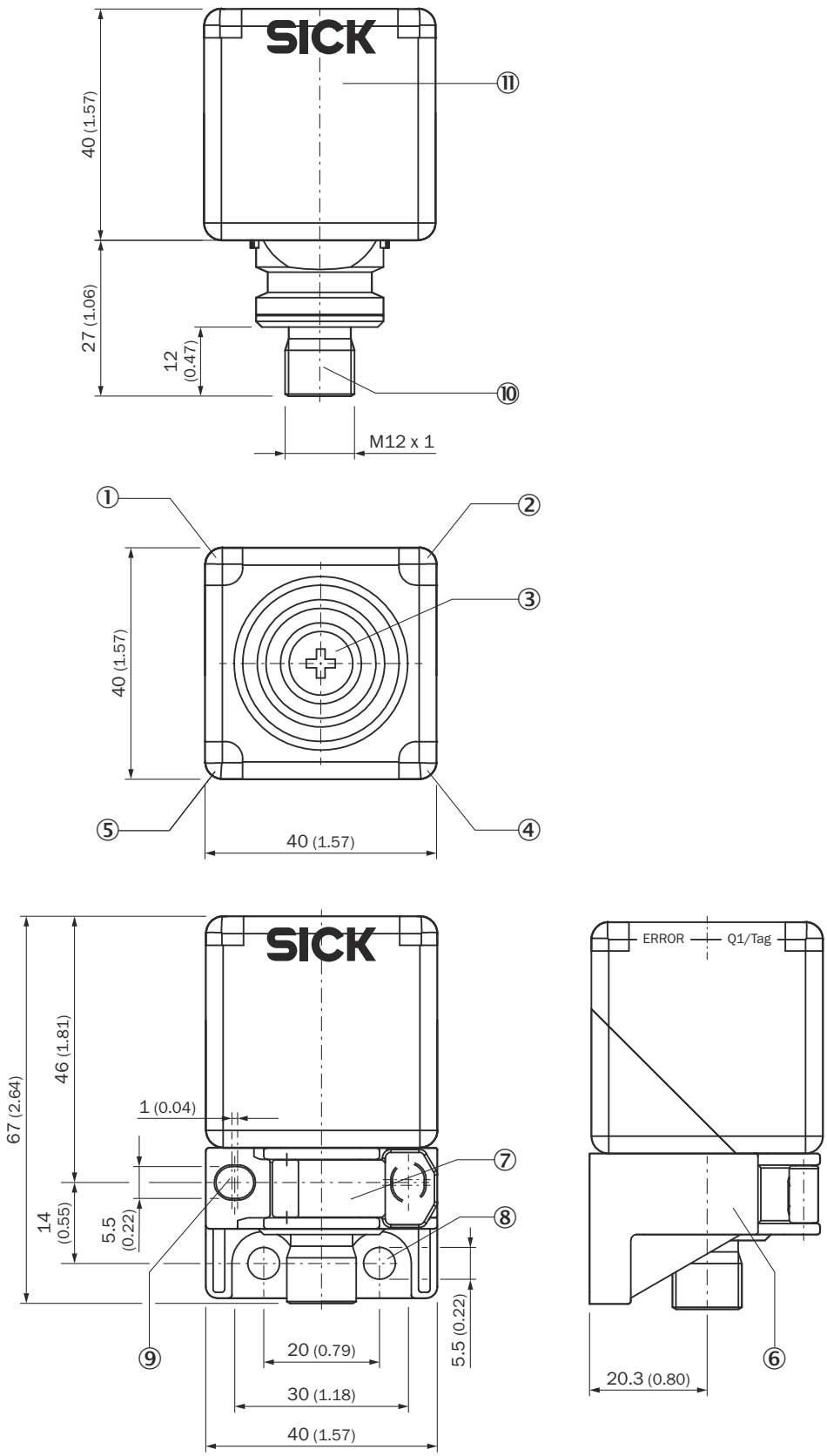

Figure 6: RFH515: Structure and dimensions, unit: mm (inch), decimal separator: period

① LED ERROR, display color red

② POWER LED, display color green

③ Cap with integrated antenna

④ LED Q2 / BUSY, display color yellow

⑤ LED Q1 / TAG, display color yellow

⑥ Terminal bracket

⑦ Bracket for locking the device in the clamping bracket

⑧ 2 x round hole for mounting

⑨ 2 x slot for alternative mounting In this view, right slot with 90° rotated orientation covered by closed bracket

⑩ IO-Link connection (male connector, M12, 4-pin, A-coded)

⑪ Field for product identification data

3.2.2 Working range of the antenna

RFH505

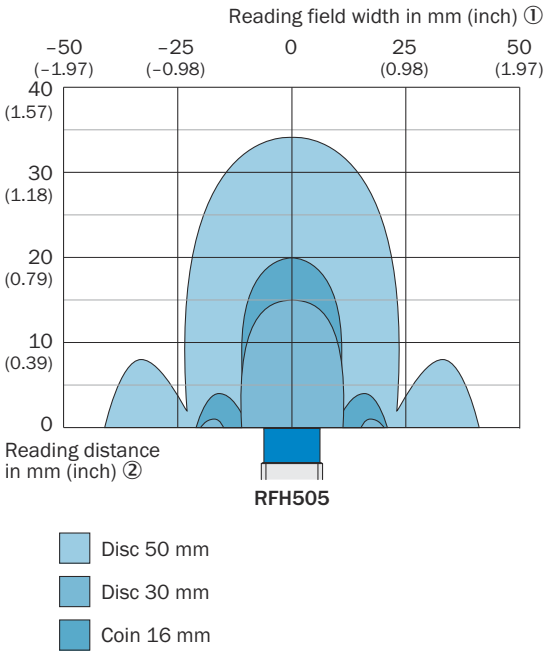

Figure 7: RFH505: reading field diagram for 3 different transponders

① Reading field width in mm (inch)

② Reading distance in mm (inch)

RFH510

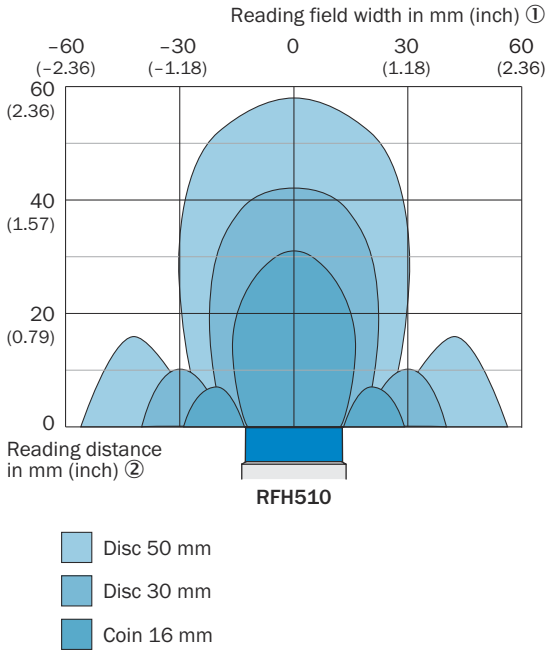

Figure 8: RFH510: reading field diagram for 3 different transponders

① Reading field width in mm (inch)

② Reading distance in mm (inch)

RFH515

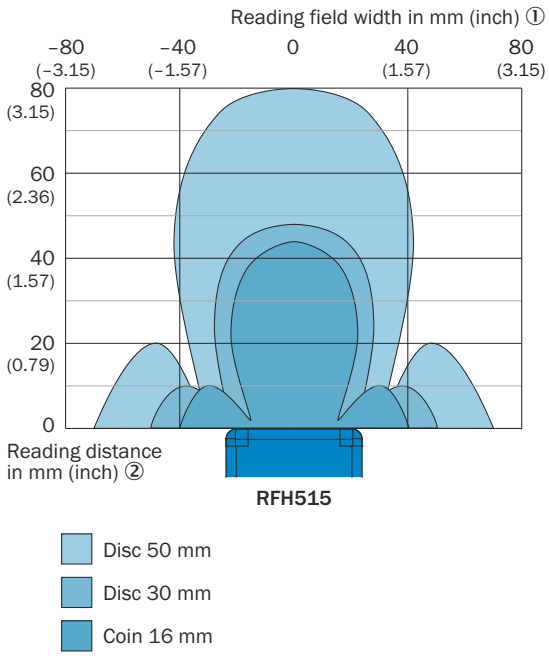

Figure 9: RFH515: reading field diagram for 3 different transponders

① Reading field width in mm (inch)

② Reading distance in mm (inch)

3.2.3 Scope of delivery

The delivery of the device includes the following components in the packaging:

Table 3: RFH5xx: scope of delivery

No. of units	Component	Remarks
1	Type of device ordered in welded plastic bag	RFH505 or RFH510: • Each with 2 nuts and 2 spring washers • Without bracket RFH515: • With clamping bracket, without fixing screws for base All devices: • Without connecting cable • Electrical connection: the M12 male connector [1] is not closed with a protective element.
1	Printed type-specific type label technical information	The document contains product identification data and important technical data.
	Printed safety notes (safety information)	The document contains safety information on handling the device as well as the SICK product page link for online access to the operating instructions
1	Printed Technical Information RFH5xx Regulatory Compliance	The document includes information on: • Country or groups of countries (region) for which a device certification exits • If applicable, country-specific operating conditions to be upheld when operating devices The regulatory notes can also be found online as PDFs at: • www.sick.com/RFH5xx

[1] The device achieves type-specific enclosure rating IP67 or IP68 when the head of the IO-Link connecting cable is attached to the male device connector and is tightly fastened.

The following associated components are not included with delivery.

The components are available free of charge as a download from the Internet; it may be necessary to select the type-specific version.

Table 4: RFH5xx: other associated components

Component	Remarks
RFH5xx operating instructions as PDF in the following languages: English and German. Other languages may be available.	Among others, the operating instructions contain more in-depth descriptions of the IO-Link parameters from the IODD electronic device description files for the RFH505, RFH510 and RFH515. Available online at: • www.sick.com/RFH5xx
IO-Link technical information Available as PDF for the RFH505, RFH510 and RFH515 specific to the type. Combined language version in both English and German.	The information contains a tabular IO-Link parameter overview coordinated with the type-specific IODD electronic device description file. Available online at: • www.sick.com/RFH5xx
• SOPAS ET configuration software • SOPAS ET device description file (*.sdd-file). Type-specific for the RFH505, RFH510 or RFH515 for managing the respective device in SOPAS ET.	The software is required when using the SICK SiLink2 IO-Link master for demonstrating the operating principle of the RFH5xx. Connection to master: an RFH5xx. For configuring the device with SOPAS ET using the IO-Link master. Software available online at: • www.sick.com/SOPAS_ET

Component	Remarks
Type-specific IODD electronic device description file of the RFH505, RFH510 or RFH515	For operational use of the device, the IODD device file is loaded to the PLC configuration tool. Available online at: • www.sick.com/RFH5xx
Function block for programmable logic controller (PLC) of different manufacturers for easy integration of the device into the system	Available online at: • www.sick.com/RFH5xx

Accessories

The following accessories for constructing a complete RFID read/write station are not included in the scope of delivery of the device.

- Matching brackets (for RFH505 or RFH510) and connecting cables
- Suitable number of transponders depending on the application

If required, order accessories separately in the Internet at www.sick.com/RFH5xx.

3.2.4 Product features and functions (overview)

Table 5: Overview of product features and functions of the device

Product feature/function	Characteristic
Safety and ease of use	• Safe identification of objects in tight spaces • Clearly defined detection ranges of the device variants enable reliable singulation of transponders, even at very small distances from objects to the device. • Rugged, compact metal or plastic housing with metric dimensions, CE marking (Europe) • Output of the read result as well as error messages in IO-Link format • Operating data request. In the event of an error: output of codified error messages • Color-coded status display of operational statuses via LEDs • Low power consumption • Wide supply voltage range • Large ambient operating temperature range
Convenient operation and configuration	• Device configuration for demonstrating the operating principle of the device in the SICK SiLink2 IO-Link master with SOPAS ET configuration software • Device configuration for operational use via the system control (PLC) using an IO-Link master and the type-specific IO-Link device description file (IODD) of the RFH5xx in the configuration tool of the PLC • Optional function blocks for easier integration of the device into PLC programs
Write/Read trigger	• Via PLC
Radio interface	• Integrated antenna
Transponder Processing	• Device supports all standard passive transponders that are compatible with ISO/IEC-15693. Recommended data media, see "Supported HF chips (IC)", page 22 • Evaluation of a transponder per reading process [1)] • Reading, writing, and multiple overwriting of the data on the transponders, depending on the application • Within a process chain, the device supplying the data is a partial component for the complete visualization of data

Product feature/function	Characteristic
Data processing	• Via PLC
Data communication	IO-Link interface (IO-Link V1.1.0 according to standard IEC 61131-9) • For data exchange with the PLC
Electrical Interfaces	• IO-Link port class A • IO-Link mode: 1 digital output • SIO mode: 2 digital outputs • Voltage supply via IO-Link
Connectivity (Design)	• 1 male connector, M12, 4-pin, A-coded.

1) No anti-collision methodology

3.2.4.1 Supported HF chips (IC)

The device supports the following HF chips (IC):

Manufacturer	Type	IC manufacturer code	IC reference	Number of blocks	Block size (byte)	Scope of user memory (bit)
NXP	ICODE SLIX	04	01	28	4	896
NXP	ICODE SLIX 2	04	01	79	4	2528
NXP	ICODE SLIX-S	04	02	40	4	1280
NXP	ICODE SLIX-L	04	03	8	4	256
TI	Tag-it HF-I plus	07	8B	64	4	2048
Infineon	SRF55V02P	05	40	56	4	1792
Infineon	SRF55V10P	05	00	248	4	7936
Fujitsu	MB89R118	08	84/85	250	8	16000

4 Transport and storage

4.1 Transport

For your own safety, please read and observe the following notes:

NOTICE
Damage to the product due to improper transport.

- The device must be packaged for transport with protection against shock and damp.
- Recommendation: Use the original packaging as it provides the best protection.
- Transport should be performed by trained specialist staff only.
- The utmost care and attention is required at all times during unloading and transportation on company premises.
- Note the symbols on the packaging.
- Do not remove packaging until immediately before you start mounting.

4.2 Unpacking

- To protect the device against condensation, allow it to equilibrate with the ambient temperature before unpacking if necessary.
- Handle the device with care and protect it from mechanical damage.
- The electrical connection is delivered without a protective cap. After opening the packaging, plug the head of the supplied connecting cable into the device and screw it in place.

4.3 Transport inspection

Immediately upon receipt in Goods-in, check the delivery for completeness and for any damage that may have occurred in transit. In the case of transit damage that is visible externally, proceed as follows:

- Do not accept the delivery or only do so conditionally.
- Note the scope of damage on the transport documents or on the transport company's delivery note.
- File a complaint.

NOTE
Complaints regarding defects should be filed as soon as these are detected. Damage claims are only valid before the applicable complaint deadlines.

4.4 Storage

Store the device under the following conditions:

- Recommendation: Use the original packaging (welded plastic bag).
- The electrical connection is delivered without a protective cap.
- Do not store outdoors.
- Store in a dry area that is protected from dust.
- Do not expose to any aggressive substances.
- Protect from sunlight.
- Avoid mechanical shocks.
- Storage temperature: see "Technical data", page 52.

- Relative humidity: see "Technical data", page 52.
- For storage periods of longer than 3 months, check the general condition of all components and packaging on a regular basis.

5 Mounting

5.1 Overview of mounting procedure

The procedure for mounting the device is divided into the following steps:

1. Select a suitable mounting location for the device.
   The mounting location and position depend on the following factors:
   - Identification task
   - Working range of the device (see "Working range of the antenna", page 18)
   - Transponder used
   - Environmental influences
2. Mount the device at the intended point of use and temporarily align the device to the object to the transponder. Make sure that there is a suitable distance to the object in reference to the working range of the device.
3. If required, mount the trigger sensor for object-specific triggering.

After the electrical installation is complete and while adjusting the device parameters to suit the application:

4. **Finely** align the device to the object and adjust it.
5. Test for successful reading and writing of the device in operational use of the application.

5.2 Preparation for mounting

5.2.1 Mounting requirements

Space requirements

- For the typical space requirements, see the:
  - Dimensional drawing of the device see "Device view", page 15 as well as shape and extension of the HF field, see "Working range of the antenna", page 18.
  - To prevent mutual interference of adjacent devices, observe the recommended minimum distances between devices used simultaneously, see "Installation notes", page 54.

The device does not require any physical or visual contact with the transponders. The device does, however, need to be aligned with the reading space.

Environmental influences

- Comply with technical data, such as the permitted ambient conditions for operation (e.g. ambient temperature range, ground potential), see "Technical data", page 52.
- To prevent condensation, avoid exposing the device to rapid changes in temperature.
- To prevent additional external heating of the device, protect the device against direct and indirect sunlight.
- Avoid installation near possible high-frequency sources of interference such as switched-mode power supplies, frequency inverters, converters or welding transformers.

- In order to avoid absorption of HF waves and any associated physical phenomena, make sure if possible that there are no metal surfaces on the side of the device in the direction of the transponder as well as on the front of the device.
- Ensure that no electrically conductive objects or liquids are positioned between the device and the transponder during the read/write process, for example, metal or water. These objects would also attenuate the generated HF field and thereby reduce the scanning range of the device.

Mounting

- RFH505, RFH510: mount the device in one suitable bracket using the nuts and the enclosed spring washers.
- RFH515: device in the clamping bracket using the two drill holes.
- Mount the device in a shock and vibration insulated manner.

5.2.2 Instructions for mounting the device when the ambient temperature can fall below 0 °C

The device can also be operated at low ambient temperatures. For details, see "Technical data", page 52.

NOTICE
Operating the device at the lower limit of the permissible ambient temperature range

The ensure that the device can produce the required heating power, do not expose it to strong air flows (e.g. from a ventilation system).

▶ If necessary, take appropriate measures to shield the device from air flows.

NOTICE
If the ambient temperature is below 0 °C, please note:

- **Do not** move the connecting cable to the device

5.2.3 Auxiliary equipment required

- RFH505 (M18) and RFH510 (M30): mounting device (bracket) with correct dimensions, see "Device view", page 15 and sufficient load-bearing capacity, see "Technical data", page 52.
- RFH515 (C44): 2 M5 screws for mounting the device to the base using the delivered bracket. The required screw length depends on the mounting base (wall thickness).
- Tool and tape measure

5.2.4 Mounting device

The device can be mounted as follows.

- RFH505 or RFH510: mount the device into an appropriate bracket using the 2 M18 or M30 fixing nuts.
- RFH515: mount the device using the supplied clamping bracket.

Optional SICK brackets

RFH505 or RFH510: the device can be installed using an optional SICK bracket or a customer-specific bracket.

SICK offers prefabricated brackets which are optimally suited for mounting the device in a wide range of applications.
Also see on Internet at:

- www.sick.com/RFH5xx

NOTE
Dimensional drawings for SICK brackets and, if applicable, mounting instructions can be found online at: www.sick.com

▶ To do so, enter the 7-digit part number of the bracket in the search field.

User-supplied brackets

A user-supplied bracket should meet the following requirements:

- Stable mounting device
  - Allow the device to be aligned in the x and y axes.
  - The mounting device must be able to bear the weight of the device, including connecting cables, in a shock-proof manner, see "Technical data", page 52.
  - In mounting situations with strong vibrations, it may be necessary to provide shock mounts.
- For mounting the device according to the dimensional drawing:
  - RFH505 and RFH510: 2 suitable drill holes for M18 or M30 male thread
  - RFH515: 2 suitable drill holes or M5 threaded holes for the supplied clamping bracket

5.3 Mounting location

When selecting the mounting location, the following factors are significant:

- Spatial working range of the antenna
- Distance of the device to the object with transponder
- Possible influence of the environment on the device HF field produced, for example:
  - Metal surfaces located to the side of and in the vicinity of the device
  - Electrically conductive objects between the antenna and transponder
  - Read/write devices located close together

5.4 Mounting the device

WARNING
Risk of injury due to damage to the device

For reasons of safety, if a device shows visible signs of damage do not put it into operation, or take it out of operation immediately.

Damage includes, for example, depending on type:

- Housing: cracking, splitting or fracture
- Electrical connections (male connector or female connector): cracks or detachment from the housing
- Device with fixed cable: Damage to the cable outlet or cable itself

Installation of devices in metal environments

NOTE
For interference-free operation of devices in metal environments, mount the devices so that the HF active heads of the devices protrude out of the metal wall. Flush installation of the device in metal drastically reduces the working range of the antenna.

RFH505, RFH510

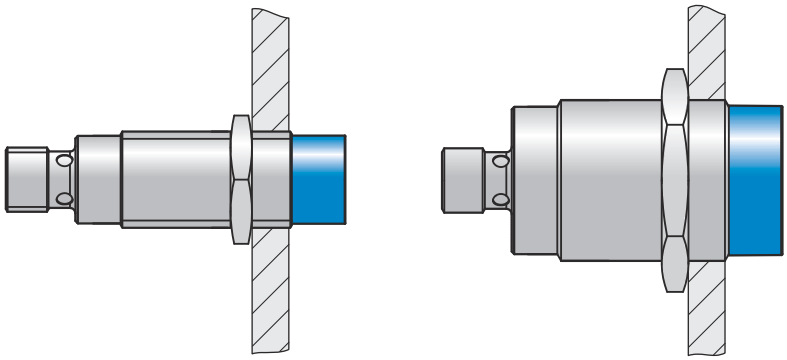

Figure 10: RFH505/515: required overrun of the active cap (blue) when mounting the device in metal (non-flush installation)

RFH515

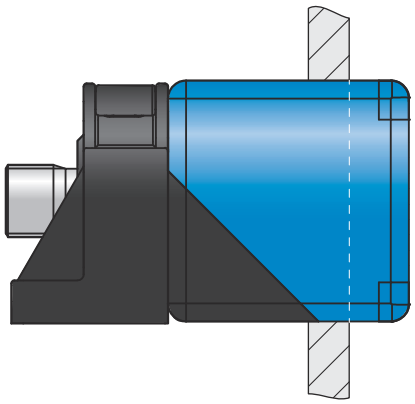

Figure 11: RFH515/515: recommended overrun of the active head when mounting the device in metal: about 10 mm (non-flush installation)

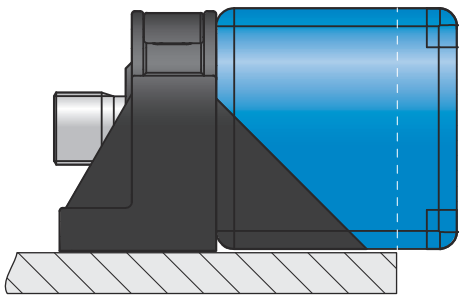

Figure 12: RFH515: recommended overrun of the active head when mounting the device on metal: about 10 mm

Basic allocation of the transponder to the device

HF transponders have coil antennas and therefore preferential directions within the radiation field of the antenna. The possible read and write range is lower or higher depending on the alignment of the transponder antenna to the antenna surface of the device.

NOTE

For reliable read and write processes, align the antenna of the HF transponder optimally to the antenna of the device depending on the type.

- Transponder plane-parallel: disk, coins and ISO card
- Transponder vertical: cylinder, glass and on-metal

The values specified in the working range of the device can only be achieved if the transponder is correspondingly aligned to the transponder antenna, see "Working range of the antenna", page 18.

RFH505, RFH510

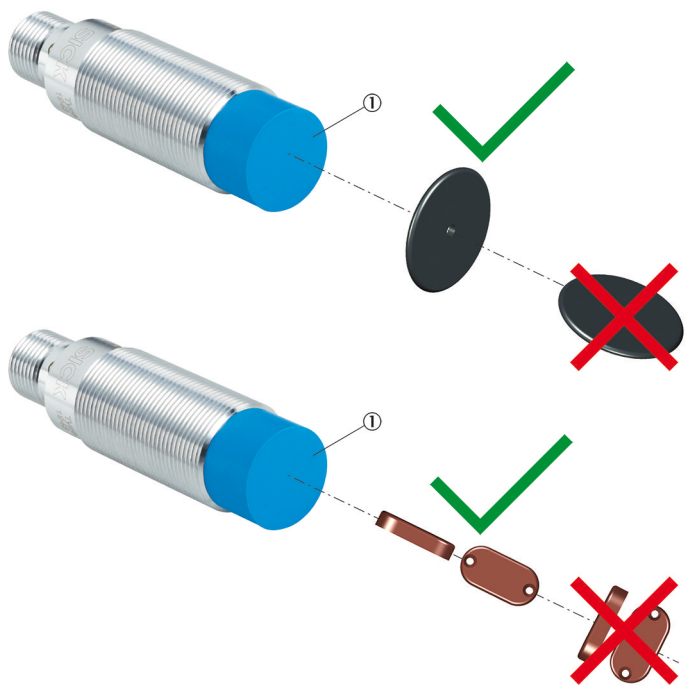

Figure 13: Optimal alignment of the transponders for a reliable read and write process.

① Cap with antenna

RFH515

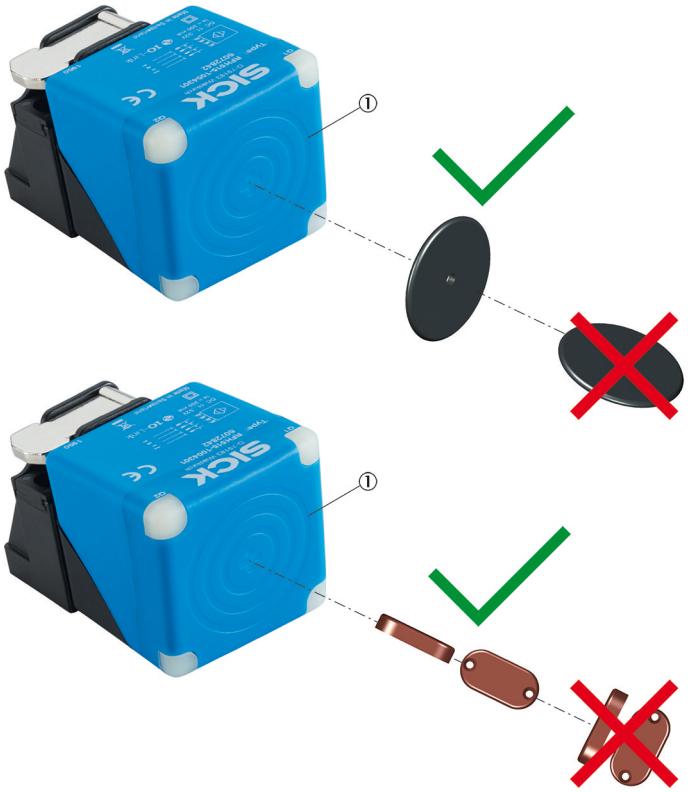

Figure 14: Optimal alignment of the transponders for a reliable read and write process.

① Cap with antenna

6 Electrical installation

6.1 Safety

6.1.1 Notes on electrical installation

Connection work

WARNING
Risk of injury and damage caused by electrical current!

As a result of equipotential bonding currents between the device and other grounded devices in the system, faulty grounding of the device can give rise to the following dangers and faults:

- Dangerous voltages are applied to the metal housings.
- Devices will behave incorrectly or be destroyed.
- Cable shielding will be damaged by overheating and cause cable fires.

Remedial measures

- Only skilled electricians should be permitted to carry out work on the electrical system.
- If the cable insulation is damaged, disconnect the voltage supply immediately and have the damage repaired.
- Ensure that the ground potential is the same at all grounding points.
- Where local conditions do not meet the requirements for a safe earthing method, take appropriate measures. For example, ensure low-impedance and current-carrying equipotential bonding.

- **Electrical installation must only be performed by electrically qualified personnel.**
- **Standard safety requirements must be observed when working on electrical systems!**
- All connection work must be performed at ambient temperatures above 0 °C, see "Ambient data", page 55
- Electrical connections between the device and other devices may only be made or separated in a voltage-free state. Otherwise, there is a risk of damaging the devices.
- In the case of open end connecting cables, make sure that bare wire ends do not touch. This creates a risk of short-circuits if the supply voltage is switched on. Wires must be appropriately insulated from each other. This also applies to unused wires.
- Execute the wire cross-sections of the data cables as well as the cables for digital inputs and outputs in line with applicable national norms.
- All cables must be designed for the ambient temperature range at the installation site.

NOTE
For additional instructions on operating the device at ambient temperatures below 0 °C: see "Prerequisites", page 33

Supply voltage

- Connect the device only to the permissible supply voltage, see "Mechanics and electronics", page 53.
- The wire cross-sections in the supply cable from the user's power system must be selected in accordance with the applicable national standards. When this is being done in Germany, observe the following standards: DIN VDE 0100 (Part 430) and DIN VDE 0298 (Part 4) and/or DIN VDE 0891 (Part 1).

- All circuits connected to the device must be designed as ES1 circuits. The voltage supply or power supply unit must satisfy ES1 requirements in accordance with the currently applicable EN 62368-1, see "Mechanics and electronics", page 53.
- First switch on the supply voltage for the device:
  - Completing the connection work
  - Carefully checking the wiring work

Data cables

NOTE

Layout of data cables

- Use suitable conventional IO-Link connecting cables. Observe maximum length of cable, see "Interfaces", page 52.
- To avoid interference, always use EMC-compliant cables and layouts. This applies, for example, to cables for switched-mode power supplies, motors, clocked drives, and contactors.
- Do not lay cables in parallel with voltage supply cables or motor cables in cable channels over longer distances.

Conditions for specified enclosure rating

To ensure compliance with the specified IP67 or IP68 enclosure rating of the device variants, the following requirements must be met.

- The head of the IO-Link is attached to the electrical M12 connecting cable and tightly fastened.

6.2 Wiring instructions

NOTICE

Faults due to incorrect wiring!

Incorrect wiring may result in operational faults.

- Follow the wiring instructions closely.

Pre-assembled cables

NOTE

Pre-assembled cables can be found online at:

- www.sick.com/RFH5xx

6.3 Pin assignments of electrical connections

6.3.1 IO-Link connection

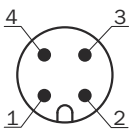

Figure 15: Male connector, M12, 4-pin, A-coded

Table 6: Pin assignment of the IO-Link connection (port class type A)

PIN	Signal	Function
1	L+	+ DC 24 V (supply voltage)

PIN	Signal	Function
2	Q2	Digital output 2
3	L–	0 V (supply voltage)
4	C/Q1	IO-Link communication / digital output 1

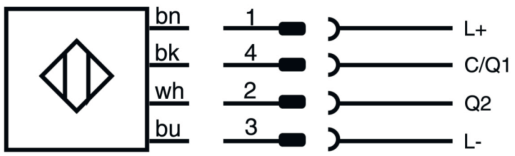

6.4 Prerequisites

- Use SICK IO-Link standard cables for the specified ambient temperature range, see:
  - www.sick.com/RFH5xx
- Do not operate the device at ambient temperatures below 0 °C when mounting or connection work is being carried out.
- Perform all connection work only in the ambient temperature range 0 °C to +80 °C. Secure the connecting cables.

6.5 Behavior of the device when switched on

After application of the supply voltage and successful initialization, all device variants can immediately be addressed by a configuration tool such as the SOPAS ET configuration software.

7 Commissioning

7.1 Overview of the commissioning steps

7.1.1 Commissioning of the RFH5xx with SOPAS ET for demonstration purposes

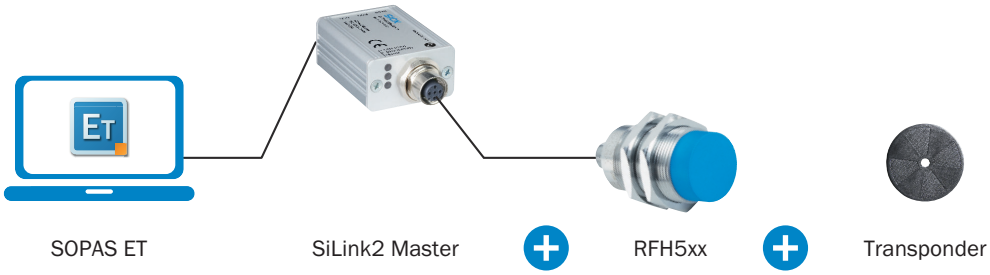

Prerequisites:

- SICK SiLink2 IO-Link master with USB cable
- Computer (Windows) with installed SOPAS ET configuration software

Procedure:

1. Connect the RFH5xx to the voltage-free IO-Link master.
2. Connect the computer to the IO-Link master using the USB interface. The USB interface supplies the master and therefore the RFH5xx with voltage.
3. Start up the computer and the SOPAS ET configuration software.
4. In SOPAS ET, load the device description file (*.SDD) of the present RFH5xx type and put the device into operation based on the factory defaults.
5. Configure the RFH5xx with SOPAS ET as desired.
   You will find helpful information on this process in the type-specific IO-Link technical information with a table overview of all parameters and the selectable device parameter values, see "Scope of delivery", page 19.
   With factory defaults, the devices are in the "Scan UID" mode. The UID is read out when doing so.
6. Present a written HF transponder to the RFH5xx. Make sure the transponder is optimally aligned to the device when doing so, see "Mounting the device", page 27. Observe the read results in the process data.
7. After successful reading, save the optimized parameters of the device as a parameter set in the RFH5xx with SOPAS ET. The data can also be stored on the computer as a parameter set (project file) for archiving purposes.

NOTE
The SOPAS ET configuration software can only be used for configuration of the RFH5xx using the SICK SiLink2 or SIG200 IO-Link master.

7.1.2 Integration and commissioning of the RFH5xx in a fieldbus system using the PLC

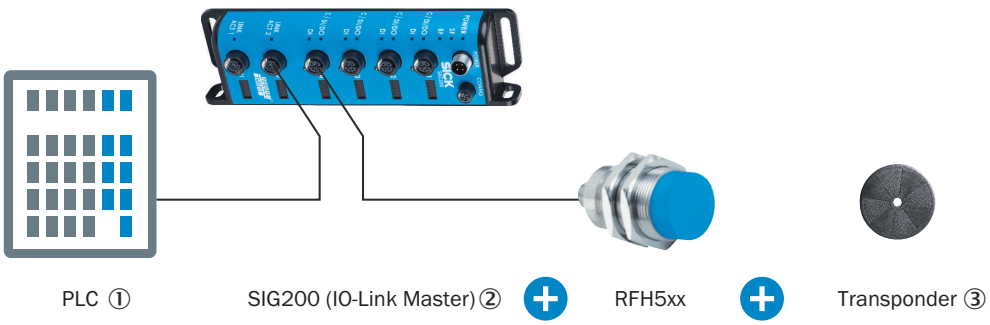

① PLC

② SIG200 (IO-Link Master)

③ Transponder

Prerequisites:

- IO-Link master, z. B. SICK SIG200, connected to the PLC via fieldbus
- Common PLC configuration tool, if applicable function block for the RFH5xx installed
- Type-specific IODDD of the RFH5xx for application in the PLC

Procedure

1. Connect the RFH5xx to the voltage-free IO-Link master via IO-Link.
2. Connect master to PLC via fieldbus.
3. Load device IODD in the IO-Link master.
4. Optional: select Data Storage in the master port configuration
5. Configure the RFH5xx as desired.
   You will find helpful information on this process in the type-specific IO-Link technical information with a table overview of all parameters and the selectable device parameter values, see "Scope of delivery", page 19.
6. Commissioning through communication via the RFH5xx function block.
7. Present the RFH5xx with a written HF transponder and generate continuous reading using the PLC. Make sure the transponder is optimally aligned to the device when doing so, see "Mounting the device", page 27.
8. Check the selected parameter values for suitability in operative use and optimize if necessary.

8 Operation

8.1 Operating options

The RFH5xx is configured for operative use in a system using the configuration tools of the PLC and the type-specific IODD file. Using requests, the sequence program of the PLC controls access to the fieldbus and the IO-Link master on the RFH5xx for reading and writing the HF transponder.

To demonstrate its operating principle, the RFH5xx can also be set up with the SOPAS ET configuration software.

NOTE

In addition to the existing operating instructions, use of the “IO-Link technical information” document is recommended:

- The type-specific documents lists the available parameters and function of the device in the parameterization and process data.
- This document assists the user when setting up the device for demonstration of operative use.

The type-specific **IO-Link technical information** can be found on the product page in the Internet at: www.sick.com/RFH5xx

8.2 Optical status indicators

RFH505 and RFH510

The two cylindrical device variants have 4 LEDs each on the bottom of the housing above the electrical connection, see "Device view", page 15. The LEDs are arranged symmetrically with 90° spacing and are therefore easy to see from different positions. The display behavior of the 4 LEDs is identical.

Display	LEDs	Color	Status
All LEDs	Lighting up	Green	• SIO mode: the device is ready for use.
	Flashing (1 Hz)	Green	• IO-Link mode: the device is ready for use.
	Flashing (5 Hz)	green / Yellow	• SIO mode: the transponder is in area C [1)]
	Off	–	The device is not ready for use.
	Lighting up	Yellow	• IO-Link mode: the transponder is in area A [1)] • SIO mode: Q1 is active
	Flashing (5 Hz)	Yellow	• IO-Link mode: the transponder is in area C [1)]
	Off	–	• IO-Link mode: the transponder is in area D [1)] • SIO mode: Q1 is inactive

1) See the next table for reference of the range for the RSSI level and RSSI threshold.

NOTE

The display condition for an event (yellow) dominates the display of green if the device has received a read or write command.

Range	RSSI	Note
A	RSSI level (transponder) ≥ RSSI threshold	The transponder is within the recommended range of the reading field.
B	RSSI threshold (parameterized)	The RSSI threshold can be defined individually (Index: 43h, Sub-Index: 03)
C	RSSI level (transponder) ≤ RSSI threshold	The transponder is within the maximum range of the reading field.
D	–	The transponder is outside the reading field.

1) RSSI = Received Signal Strength Indication.

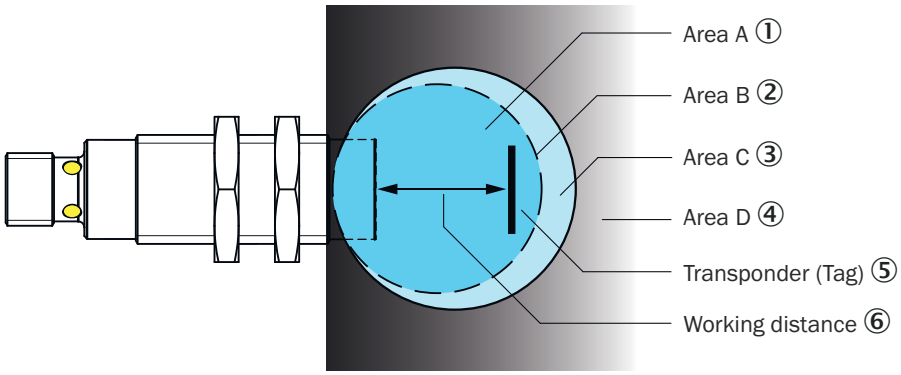

Figure 16: Schematic presentation of the read range of the RFH505 and RFH510 related to RSSI

① Area A
② Area B
③ Area C
④ Area D
⑤ Transponder (tag)
⑥ Working distance of the transponder

RFH515

The RFH515 cubic device variant has an LED with permanently assigned display function in each of the four corners at the top of the housing.

Display	LED	Color	Status
POWER	Lights up	Green	• SIO mode: the device is ready for use.
	Flashing (1 Hz)	Green	• IO-Link mode: the device is ready for use.
	Off	–	The device is not ready for use.
Q1 / TAG	Lights up	Yellow	• IO-Link mode: the transponder is in area A [1)] • SIO mode: Q1 is active
	Flashing (5 Hz)	Yellow	• IO-Link mode: the transponder is in area C [1)] • SIO mode: the transponder is in area C [1)] and Q1 is inactive
	Off	–	• IO-Link mode: the transponder is in area D [1)]
Q2 / BUSY	Lights up	Yellow	• SIO mode: Q2 is active
	Flashing (1 Hz)	Yellow	• IO-Link mode: the device is ready for use [2)]
	Flashing (5 Hz)	Yellow	• SIO mode: the transponder is in area C [1)] and Q2 is inactive
	Off	–	• IO-Link: no outstanding command

Display	LED	Color	Status
ERROR	Lights up	Red	• An error has occurred, see "Error codes overview", page 48

1) See the next table for reference of the range for the RSSI level and RSSI threshold.
2) The device has received a read or write command and is waiting for a transponder.

Range	RSSI	Note
A	RSSI level (transponder) ≥ RSSI threshold	The transponder is within the recommended range of the reading field.
B	RSSI threshold (parameterized)	The RSSI threshold can be defined individually (Index: 43h, Sub-Index: 03)
C	RSSI level (transponder) ≤ RSSI threshold	The transponder is within the maximum range of the reading field.
D	–	The transponder is outside the reading field.

1) RSSI = Received Signal Strength Indication.

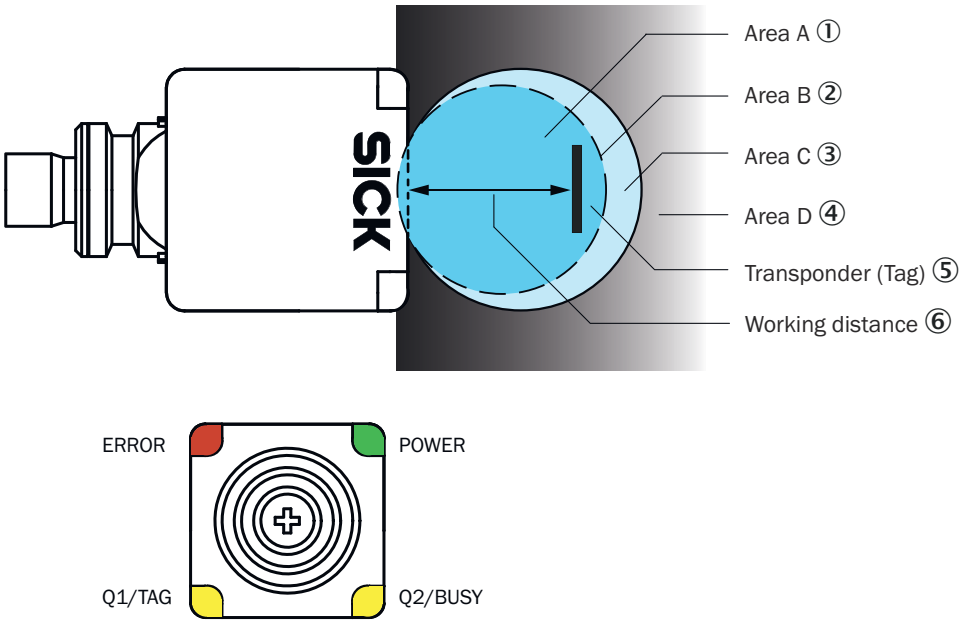

Figure 17: Schematic presentation of the read range of the RFH515 related to RSSI

① Area A
② Area B
③ Area C
④ Area D
⑤ Transponder (tag)
⑥ Working distance of the transponder

8.3 Operation via IO-Link

The device can exchange process data, parameters (also ISDU, service data) via IO-Link. To do this, connect the device to a suitable IO-Link master.

The IO-Link interface of the device has the following properties:

Table 7: Properties of the IO-Link interface

IO-Link specification	V 1.1
Minimum cycle time	10 ms
Transmission rate	COM3 (230.4 kBd)

Process data width	32-byte outgoing (from device to master) 32-byte incoming (from master to device)
Process data type	INT
Parameter data storage in the IO-Link master	Available

IO-Link is a non-proprietary internationally standardized communication technology which makes it possible to communicate with sensors and actuators in industrial environments (IEC 61131-9).

The IO-Link devices communicate with the superior control systems using an IO-Link master.

The IO-Link devices (slaves) are connected to the master in a serial, bidirectional point-to-point connection via an IO-Link interface (port). This arrangement does not represent a fieldbus. IO-Link masters are available in different variants and usually consist of decentralized, superior fieldbus gateways or input cards for the backplane bus of the control used.

To make it possible for an IO-Link sensor to communicate with the control, the IO-Link master and the respective IO-Link sensor must be integrated in the hardware configuration in the control manufacturer's engineering tool.

To simplify the integration process, SICK provides sensor-specific device description files (IODD = IO-Link Device Description) for IO-Link devices.

In addition to the process data, depending on the device, device data (parameters, identification data, and diagnostic information) can be exchanged between the master and the device. To use this function, the IO-Link master needs the sensor-specific device description file (IODD).

Download the device description file from the homepage free of charge: **www.sick.com/RFH5xx**

Not all control system manufacturers support the use of IODDs. If third-party IO-Link masters are used, the IO-Link sensor can be integrated directly during hardware configuration by manually entering the relevant sensor parameters. To ensure that the IO-Link sensor can be easily integrated into the control program, SICK also provides function blocks for many control systems. These function blocks make it easier to read and write the individual sensor parameters, for example, and provide support when it comes to interpreting the process data supplied by the IO-Link sensor.

Download the function blocks form the homepage free of charge: **www.sick.com/RFH5xx**

8.3.1 Service data (ISDU, parameter)

NOTE
The device contains a rewritable memory (flash memory) for storing configuration data (parameters), such as Application Specific Tag, Location and Function Tag, RF field, etc. It is strongly recommended to write configuration data permanently only during commissioning. The device is not designed for permanent rewriting of configuration data during operation. Temporary storage is not affected by this, e.g. data storage (backup/restore) in the IO-Link master, which takes place in the volatile memory (RAM) of the device.

8.3.1.1 RF Configuration

With RF configuration or the RSSI threshold, the detection range (working range) of the device can be limited (reduced).

The RSSI value specifies the signal strength of the signal received by the device.

- Maximum value: 0x07
- Minimum value: 0x00

NOTE
The device also reads transponders with a RSSI value of 0x00.

The RRSI threshold specifies the minimal RSSI value that must be achieved so that a transponder is output. If the RSSI value is below the RSSI threshold, the device does not output transponder data into the process data.

Index dec (hex)	Name	Format (Offset)	Lenght	Access [1]	Default Value	Value / Range	Remark [Unit]
66 (0x42)	RF configuration	Record [2]	4 Byte	rw			RF configuration
3 (0x03)	RSSI Threshold	Bit (8)	8 Bit	rw	0	0 = lowest RSSI 1 = 1 2 = 2 3 = 3 4 = 4 5 = 5 7 = strongest RSSI	Required minimum returned signal strength for output of transponder in process data (from 0-7)

1) ro = read only, wo = write only, rw = read/write
2) Subindex access not supported

8.3.1.2 Device Characteristics

Specific information about the device properties:

Index dec (hex)	Name	Format (Offset)	Lenght	Access [1]	Default Value	Value / Range	Remark [Unit]
73 (0x49)	Device characteristics	Record [3]	144 Byte	ro			Features of the device
1 (0x01)	RFID standard compatibility	Bit (896)	32 Byte	ro	13.56 MHz, ISO15693		
2 (0x02)	Read-write distance max	Bit (640)	32 Byte	ro	60 mm with diam 50 mm SLIX tag		
3 (0x03)	Supply voltage range U_b [4]	Bit (512)	16 Byte	ro	DC 11 V ... 32 V		
4 (0x04)	Max. output current	Bit (384)	16 Byte	ro	≤ 200 mA		
5 (0x05)	Ambient operating temperature	Bit (256)	16 Byte	ro	–25 °C ... +80 °C		
6 (0x06)	Storage temperature	Bit (128)	16 Byte	ro	–25 °C ... +80 °C		
7 (0x07)	Enclosure rating	Bit (0)	16 Byte	ro	IP67		

1) ro = read only, wo = write only, rw = read/write
3) Subindex access not supported
4) $U_b = V_S$ (Power supppy voltage)

8.3.1.3 Tag Info

The transponder data shows the data content and structure of the read transponder. For more information, see standard ISO 15693.

To provide this data, the transponder must be in the detection range of the device during the request.

Index dec (hex)	Name (indexes)	Format (Offset)	Lenght	Access [1]	Default Value	Value / Range	Remark [Unit]
67 (0x43)	TAG Info	Record [3]	15 Byte	ro			Data available as long as transponder is in device detection range
1 (0x01)	UID	Bit (56)	8 Bit	ro			Unique ID of the transponder
2 (0x02)	DSFID	Bit (48)	8 Bit	ro			Data Storage Flag Identifier
3 (0x03)	AFI	Bit (40)	8 Bit	ro			Application Family Identifier
4 (0x04)	Number of blocks	Bit (32)	8 Bit	ro			Number of memory blocks in transpon-der user memory
5 (0x05)	Memory block size	Bit (24)	8 Bit	ro			Size of memory blocks [byte]
6 (0x06)	RSSI	Bit (16)	8 Bit	ro			Returned signal strength from the transponder
7 (0x07)	IC manufacturer code [4]	Bit (8)	8 Bit	ro			The manufacturer of the IC
8 (0x08)	IC reference[4]	Bit (0)	8 Bit	ro			Specific IC model (type)

1) ro = read only, wo = write only, rw = read/write
3) Subindex access not supported
4) see "Supported HF chips (IC)", page 22

The indices consist of:

- **UID**: the transponders are clearly identified by a 64-bit identifier (UID). The manufacturer defines the UID separately for each transponder.
  The UID is used for unique and individualized addressing of each transponder:
  - During the anti-collision loop
  - For 1:1 exchange between a read device and transponder
- **DSFID** (read only): “Data Storage Format Identifier” specifies how the data in the transponder memory is structured.
- **AFI** (read only): the “Application Family identifier” presents the type of application which the transponder solves.
- **Number of blocks**: indicates how many memory blocks are available in the transponder.
- **Memory block size**: size of the blocks in bytes
- **RSSI**: RSSI value of the read transponder
- **IC manufacturer code**: manufacturer of the transponder IC,
- **IC reference**: specific IC type

8.3.1.4 UID history

The UID history shows the last five transponders read by the device. This also includes the system time at which each transponder moved into the detection range of the device.

The list is reset during a “power cycle”.

Index dec (hex)	Name	Format (Offset)	Lenght	Access [1]	Default Value	Value / Range	Remark [Unit]
68 (0x44)	UID List	Record [3]	80 Byte	ro			UIDs of the last 5 transponders inside the reading field of the device
1 (0x01)	Tag 1	Bit (576)	64 Bit	ro			UID of last transponder in device detection range
2 (0x02)	Time stamp tag 1	Bit (512)	64 Bit	ro			System time stamp of last transponder entering reading field of device [ms]
3 (0x03)	Tag 2	Bit (448)	64 Bit	ro			UID of 2nd last transponder in device detection range
4 (0x04)	Time stamp tag 2	Bit (384)	64 Bit	ro			System time stamp of 2nd last transponder entering reading field of device [ms]
5 (0x05)	Tag 3	Bit (320)	64 Bit	ro			UID of 3rd last transponder in device detection range
6 (0x06)	Time stamp tag 3	Bit (256)	64 Bit	ro			System time stamp of 3rd last transponder entering reading field of device [ms]
7 (0x07)	Tag 4	Bit (192)	64 Bit	ro			UID of 4th last transponder in device detection range
8 (0x08)	Time stamp tag 4	Bit (128)	64 Bit	ro			System time stamp of 4th last transponder entering reading field of device [ms]
9 (0x09)	Tag 5	Bit (64)	64 Bit	ro			UID of 5th last transponder in device detection range
10 (0x0A)	Time stamp tag 5	Bit (0)	64 Bit	ro			System time stamp of 5th last transponder entering reading field of device [ms]

[1] ro = read only, wo = write only, rw = read/write
[3] Subindex access not supported

8.3.1.5 Tag Timing

In the **Tag timing** tab, the time of entry and exit as well as the resulting duration of the time of the last transponder in the detection range of the device are calculated.

Index dec (hex)	Name	Format (Offset)	Lenght	Access [1]	Default Value	Value / Range	Remark [Unit]
74 (0x4A)	Transponder time monitoring	Record [3]	24 Byte	ro			System time of a transponder event
1 (0x01)	System time IN	Bit (128)	64 Bit	ro			System time stamp transponder entering reading field of device [ms]
2 (0x02)	System time OUT	Bit (64)	64 Bit	ro			System time stamp transponder leaving reading field of device [ms]

Index dec (hex)	Name	Format (Offset)	Lenght	Access [1]	Default Value	Value / Range	Remark [Unit]
3 (0x03)	Transponder IN RANGE time	Bit (0)	64 Bit	ro			IN RANGE = System Time OUT minus System Time IN [ms]

[1] ro = read only, wo = write only, rw = read/write
[3] Subindex access not supported

8.3.1.6 Alarm

The device offers the option of configuring and outputting two alarms. The alarms are transmitted cyclically via the process data. If the device is operated in SIO mode, an alarm can also be used as a source for the SIO mode.

The device triggers alarms as soon as the set threshold (consisting of “Measurement Alarm” 1/2 “Threshold”) is exceeded in the read process.

The device can use the following value as a source for the alarm:

- RSSI value (transponder in the detection range)

The “Time the transponder is in the detection range [ms]” specifies for how many ms the transponder is in the detection range. If this time is less than the set threshold, the device outputs an alarm.

The triggered alarm remains active in mode "2 = RSSI" until the condition is fulfilled again. If the “Transponder in Range time” condition was selected, the alarm is active until a new transponder is situated in the detection range.

Index dec (hex)	Name	Format (Offset)	Lenght	Access [1]	Default Value	Value / Range	Remark [Unit]
71 (0x47)	Alarm	Record [3]	12 Byte	rw			
1 (0x01)	Alarm 1 configuration	Bit (88)	8 Bit	rw	0	0 = Always off 1 = Active	
2 (0x02)	Alarm 1 threshold	Bit (56)	32 Bit	rw	0		Alarm 1 goes true if Alarm 1 reference value ≥ Alarm 1 threshold
3 (0x03)	Alarm 1 comparative value	Bit (48)	8 Bit	rw	2	0 = SIO CNT Q1 1 = SIO CNT Q2 2 = RSSI 3 = Transponder IN range time [ms]	
4 (0x04)	Alarm 2 Configuration	Bit (40)	8 Bit	rw	0	0 = Always off 1 = Active	
5 (0x05)	Alarm 2 threshold	Bit (8)	32 Bit	rw	0		Alarm 2 goes true if Alarm 2 reference value ≥ Alarm 2 threshold
6 (0x06)	Alarm 2 comparative value	Bit (0)	8 Bit	rw	2	0 = SIO CNT Q1 1 = SIO CNT Q2 2 = RSSI 3 = Transponder IN range time [ms]	

[1] ro = read only, wo = write only, rw = read/write
[3] Subindex access not supported

8.3.1.7 SIO mode parameters

In addition to data exchange in IO-Link mode, the device can also switch in SIO mode (standard I/O).

To do so, configure SIO mode in parameter 0x41. In SIO mode, the device offers four evaluation conditions each (subindex 0x01 or 0x06) for both the Q1 or Q2 digital outputs.

Display behavior in the respective mode:

- When using the “Transponder Presence” condition, the digital output is activated as soon as a tag is located in the field (0x00).
- When using the “Compare Data” condition, the device compares the data read from the transponder to the reference data. To do so, the device compares the data of the first four bytes of a memory block. Define the reference data for the device in subindex 0x03. The data structure of the device is structured in hexadecimal format and you have to ensure the data is input correctly.
  Example: filter definition for a block
  - Data in transponder: 0x01 0x02 0x03 0x04
  - Input for filtering: 0x04 0x03 0x02 0x01
- The 0x02 and 0x03 indices make it possible to use the alarm function of the device in SIO mode. Description of the function see "Alarm", page 43.

Configure the polarity for the events in SIO mode in subindex 3. The data retention time specifies how long the device keeps the level of the output after the SIO condition is no longer met.

C/Q1 SIO mode works on pin 4 of the M12 plug connector, in classic SIO mode in accordance with IEC61131-9. C/Q2 mode uses pin 2 as a digital output.

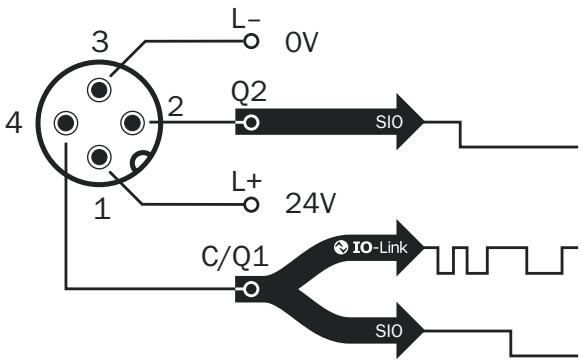

▶ In order to use pin 2 as a digital input in the available IO-Link master, check the configuration options of your IO-Link master.

For more detailed information on both modes, see see "Process Data", page 45.

Index dec (hex)	Name	Format (Offset)	Lenght	Access [1]	Default Value	Value / Range	Remark [Unit]
65 (0x41)	Configure SIO-mode	Record [3]	15 Byte	rw			Configuration of the device for SIO mode operation
1 (0x01)	Evaluation condition C/Q1	Bit (112)	8 Bit	rw	0	0 = Transponder Presence 1 = Compare data 2 = Alarm 1 3 = Alarm 2 4 = SIO deactivated	

Index dec (hex)	Name	Format (Offset)	Lenght	Access [1]	Default Value	Value / Range	Remark [Unit]
2 (0x02)	C/Q1 memory address for compare data condition	Bit (104)	8 Bit	rw	0		Transponder memory block adress for "Compare Data"
3 (0x03)	C/Q1 comparison data for compare data mode	Bit (72)	32 Bit	rw	0		Comparison data value stored in read-write device to be compared to transponder data
4 (0x04)	C/Q1 Polarity	Bit (64)	8 Bit	rw	0	0 = Output "close" if condition = true 1 = Output "open" if condition = true	
5 (0x05)	C/Q1 & Q2 Output Hold Time	Bit (56)	8 Bit	rw	0	0 = Output hold time = 0 ms 1 = 100 ms 2 = 200 ms 3 = 500 ms 4 = 1000 ms 5 = 2000 ms	
6 (0x06)	Evaluation condition Q2	Bit (48)	8 Bit	rw	0	0 = Transponder Presence 1 = Compare data 2 = Alarm 1 3 = Alarm 2 4 = SIO deactivated	
7 (0x06)	Memory address for compare data mode (Q2)	Bit (40)	8 Bit	rw	0		Transponder memory block adress for "Compare Data"
8 (0x08)	Q2 comparison data for compare data mode	Bit (8)	32 Bit	rw	0		Reference data value stored in RWM memory to be compared to transponder data
9 (0x09)	Q2 Polarity	Bit (0)	8 Bit	rw	0	0 = Output "close" if condition = true 1 = Output "open" if condition = true	

1) ro = read only, wo = write only, rw = read/write
3) Subindex access not supported

8.3.2 Process Data

The devices offer four different modes for reading/writing transponders which can be selected in the process data:

- Auto-read (0x01)
- Auto-write (0x02)
- Read (0x03)
- Write (0x04)
- Scan UID (0x05)

The corresponding mode can be set via “CMD” (byte 0, bit 0-3) in “Process Data OUT”.

If the device was able to successfully run the requested command, the “Ready flag” inverts (“Process Data IN”).

When switching to another mode ("CMD"), the command must be started with “START” = 1 (“Process Data OUT”).

8.3.2.1 SCAN UID Mode

An UID is transmitted in each cycle in Scan UID mode. If no transponder is situated in the detection range, the last read UID is displayed.

The device starts to read out the UID as soon as the mode has been set in the process data. The “Ready flag” (“Process Data IN”) inverts with every piece of process data.

In addition to the UID, the antenna status, error codes, alarms, RSSI and the entry time stamp and exit time stamp are transmitted. This mode is set in the factory.

8.3.2.2 (Auto)-read and (Auto)-write

Blocks of the user memory in the transponder can be read and written in these modes.

The addressing of the desired memory range and the desired length of the data are defined in “Process Data OUT”.

Read/Write:

- As soon as the command has been set, the device carries out the command one time.
- This is for applications in which different ranges of the user memory are read out/written.
- If a transponder is located in the field when the command is executed, the device executes the command directly.
- If no transponder is located in the field when the command is executed, the device executes the command when the next transponder enters.
- A read or write command is triggered manually with the inversion (toggle) of the “START” bit (“Process Data OUT”).
- When execution is successful, the “Ready flag” (“Process Data IN”) inverts to the same status as the “START” bit (“Process Data OUT”).

Auto-read/Auto-write:

- As soon as the command has been set, the device carries out the command continuously.
- This is for applications in which the same range of the user memory is always read out/written.
- For Auto-read and Auto-write, the device does not require manual inversion (toggle) of the “START” bit (“Process Data OUT”).
- The “Ready flag” (“Process Data IN”) inverts continuously every time a read/write command is executed.

28 bytes of data are available for reading/writing in all modes.

NOTE
When reading/writing the user memory, note that reading or writing must always be done in blocks (4 or 8 bytes, depending on the IC used).

9 Maintenance

9.1 Maintenance plan

During operation, the device works maintenance-free.

Depending on the assignment location, the following preventive maintenance tasks may be required for the device at regular intervals:

Table 8: Maintenance plan

Maintenance work	Interval	To be carried out by
Check device and connecting cables for damage at regular intervals.	Depends on ambient conditions and climate.	Specialist
Clean device head, for example to remove metal dust and clean remaining dust off the rest of the device.	Depends on ambient conditions and climate.	Specialist
Check the screw connections and plug connectors.	Depends on the place of use, ambient conditions or operating requirements. Recommended: At least every 6 months.	Specialist

9.2 Cleaning

NOTICE
Equipment damage due to improper cleaning.

Improper cleaning may result in equipment damage.

- Only use recommended cleaning agents and tools.
- Never use sharp objects for cleaning.

- ▶ If it is dirty (e.g., metal dust), clean the front of the device carefully using a soft, damp cloth (with a mild cleaning agent) in order to achieve the full read and write speed.
- ▶ The device must be cleaned regularly from the outside to guarantee heat dissipation and therefore operation. Clean using a dry towel or an industrial vacuum cleaner. Do not use cleaning agents.

10 Troubleshooting

10.1 Overview of Potential Errors and Faults

WARNING
Risk of injury due to damage to the device

For reasons of safety, if a device shows visible signs of damage do not put it into operation, or take it out of operation immediately.

Damage includes, for example, depending on type:

- Housing: cracking, splitting or fracture
- Electrical connections (male connector or female connector): cracks or detachment from the housing
- Device with fixed cable: Damage to the cable outlet or cable itself

Table 9: Errors and faults

Situation	Error/ fault
Mounting	■ Device poorly aligned to the objects with transponders (e.g. faults due to metal surfaces located next to the device) ■ Damping materials between the device and transponders, e.g. liquids
Electrical installation	■ Supply voltage too low or incorrect polarity ■ Data interfaces of the device wired incorrectly ■ Digital inputs or outputs wired incorrectly
Configuration	■ Functions not adapted to local conditions, e.g., parameters for the data interface not set correctly ■ Device limits not observed, e.g. working range of the antenna
Operation	■ Ambient temperature too low or high ■ Read pulse control not suitably configured for the object(s) in the working range. ■ Device faults (hardware/ software)

10.1.1 LEDs on the device

The status indicators of the device can alert you to possible errors or faults, see "Optical status indicators", page 36. Further information on this can be found in the “System Information” section.

10.1.2 Error codes overview

In the read or write process, the device shows Error Codes in the process data.

The codes can be read out via the PLC or using the SOPAS ET configuration software.

Error code	Description
1	Command Not Supported
2	Format Error
3	Option Not Supported
5	Command Problem
6	Comm Tag Error
15	Tag Error
16	No Memory Block
18	Block Protected
21	CRC Error

Error code	Description
22	Collision Error
23	Time Out Error
24	App Mem Error
25	App Que Error
26	App LOGRn Error
27	App LOGPSW Error
255	App General Error

10.2 SICK service

If the fault cannot be rectified, the device may be defective.

The device may not be repaired by the user. Interference with or modification of the device will invalidate any warranty claims against SICK AG.

Rapid replacement of a device by the user is, however, possible.

- ▶ Where a fault cannot be rectified, make contact with the SICK Service department. To find your agency, see the final page of this document.

NOTE
Before calling, make a note of all type label data such as type designation and serial number to ensure faster telephone processing.

10.3 Repairs

Repair work on the device may only be performed by qualified and authorized personnel from SICK AG. Interruptions or modifications to the device by the customer will invalidate any warranty claims against SICK AG.

10.4 Returns

- ▶ Do not dispatch devices to the SICK Service department without consultation.
- ▶ The device must be sent in the original packaging or an equivalent padded packaging.

NOTE
To enable efficient processing and allow us to determine the cause quickly, please include the following when making a return:

- Details of the contact person
- Description of the application
- Description of the fault that occurred

10.5 Replacing a device with transfer of the current configuration data

NOTE
We recommend implementing a device exchange concept to make it possible to quickly replace a failed device without great configuration effort.

IO-Link has the option of automatically saving the device parameter values and keeping them on hand in the IO-Link master as a precaution, even after change parameterization, using the “Backup/Restore” function. After exchanging a failed device with a device with the same device ID (identical type), the master automatically parameterizes the exchange device.

11 Decommissioning

11.1 Disposal

If a device can no longer be used, dispose of it in an environmentally friendly manner in accordance with the applicable country-specific waste disposal regulations. Do not dispose of the product along with household waste.

NOTICE

Danger to the environment due to improper disposal of the device.

Disposing of devices improperly may cause damage to the environment.

Therefore, observe the following information:

- Always observe the national regulations on environmental protection.
- Separate the recyclable materials by type and place them in recycling containers.

12 Technical data

NOTE
The relevant online data sheet for your product, including technical data, dimensional drawing, and connection diagrams can be downloaded, saved, and printed from the Internet:

- www.sick.com/RFH5xx

Please note: This documentation may contain further technical data.

12.1 Features

Table 10: Technical data for RFH5xx: Features

	RFH505-1004301	RFH510-1004301	RFH515-1004301
Version (working range)	Short Range		
Product category	RFID read/write device with integrated antenna		
Application	• Worldwide • For country-specific approvals or conditions which are to be observed when operating the device, see Technical Information RFH5xx Regulatory Compliance (part number 8025651). A printed version of the document is included with the device.		
Carrier frequency	HF, 13.56 MHz, global		
Frequency band	13,553 MHz – 13,567 MHz		
Transmitting power	Max. 200 mW		
RFID standard (air interface)	ISO/IEC 15693 [1]		
Air interface data transmission rate	26.5 kBit/s		
Write/Read range [2]	Max. 35 mm	Max. 60 mm	Max. 80 mm
Connection type	IO-Link		
Conformities	Depending on type. See type-specific online data sheet at: www.sick.com/RFH5xx		
Certificates	Depending on type. See “Downloads” section online at: www.sick.com/RFH5xx		

1) No anti-collision methodology
2) Related to disk-shaped transponders Condition: The transponder is aligned plane-parallel to the head of the device within the working range of the device, see "Working range of the antenna", page 18. The write and read range is generally dependent on the transponder used (dimensions, quality), its position and alignment to the device and the ambient conditions.

12.2 Interfaces

Table 11: Technical data for RFH5xx: Interfaces

	RFH505-1004301	RFH510-1004301	RFH515-1004301
IO-Link			
• **SICK Device ID**	8389190	8389191	8389192
• **Part number (device)**	6072840	6072841	6072842
• **Protocol**	IO-Link V1.1.0 according to standard IEC 61131-9		

	RFH505-1004301	RFH510-1004301	RFH515-1004301
• **Function**	Host: process data, service data (parameterization, diagnostics), data storage		
• **Process data length**	IN (input): 32 bytes OUT (output): 32 bytes		
• **Data transmission rate**	COM3 (230.4 kBd)		
• **Minimum cycle time**	10 ms		
• **Operating modes**	• IO-Link mode (COM mode) for data exchange • SIO mode (standard IO mode) for operation as non-switching sensor		
• **Digital outputs**	• IO-Link mode: 1 (Q2), switching, PNP • SIO mode: 2 (Q1, Q2), switching, PNP • Short-circuit protected, temperature protected, not electrically isolated from the supply voltage • Maximum output current of the device via IO-Link master: I_{out} ≤ 200 mA		
• **Connecting cable** [3]	• IO-Link mode: standard 4-conductor industrial cable with two M12 cable heads. Length max. 20 m		
Optical displays	4 x LED, multi-colored		
	Each with identical display function for power and different events		Each with identical display function for power and different events with fixed assignment
Configuration	• With SOPAS ET configuration software via IO-Link master (e.g. SICK SiLink2 master) • With fieldbus controller (PLC) and additional support by SICK function blocks [5]		

1) Serial, bidirectional point-to-point connection for signal transmission and power supply.
2) Process data is transmitted cyclically and service data acyclically.
3) Not included with delivery of the device.
4) For displaying device and operational statuses.
5) Function blocks for PLC types from different manufacturers are available online at: www.sick.com/RFH5xx.

12.3 Mechanics and electronics

Table 12: Technical data for RFH5xx: Mechanics and electronics

	RFH505-1004301	RFH510-1004301	RFH515-1004301
Connection type	1 x male connector, M12, 4-pin, A-coded, port class A (type A)		
Supply voltage V_S	ES1 in accordance with EN 62368-1 DC 11 V ... 32 V, reverse polarity protected, short-circuit protected		
Power consumption	1.8 W		
Current consumption	≤ 50 mA		
Housing design (form factor)	Cylindrical (M18)	Cylindrical (M30)	Cubical (C44)
Male thread	M18 x 1	M30 x 1.5	–
Housing material	Body: brass (chromium-plated), cap: plastic (PBTP)		Plastic (PBTP), metal
Housing color	Blue, silver		Blue Clamping bracket: black

	RFH505-1004301	RFH510-1004301	RFH515-1004301
Mounting	In metal environments: non-flush		
	Device mounting: • 2 x M18 nuts, 2 x spring washers • Tightening torque: max. 25 Nm	Device mounting: • 2 x M30 nuts, 2 x spring washers • Tightening torque: max. 70 Nm	Clamping bracket Drill holes: • 2 x 5.5 mm, round • 2 x 5.5 mm x 5 mm, slot Fixing screws (M5): • Tightening torque: max. 2.5 Nm Orientation of the antenna can be changed. [2] Mounting of male connector on device: • Tightening torque: max. 0.6 Nm
MTTF	> 756 years [3]		
Enclosure rating	IP67 [4]		IP68 [4]
Protection class	(Class 2)		
Safety	EN 62368-1:2014-08		
Weight	37 g [5]	87 g [5]	108 g [6]
Dimensions (ø x H)	M18 mm x 63.5 mm	M30 mm x 63.5 mm	40 mm x 40 mm x 67 mm [7]

1) Bracket is included with delivery.
2) By 90° referring to the longitudinal axis of the device.
3) Continuous operation at ambient operating temperature +25 °C. 322 years at +40 °C, 41 years +80 °C.
4) EN/ETSI 301 489-1, para 8.2. The test method shall be performed in accordance with EN 55022.
5) Including fixing nuts and spring washers.
6) Including clamping bracket. With bracket 88 g.
7) Including the protruding electrical connection, see "Device view", page 15.

12.3.1 Installation notes

RFH505 (M18) / RFH510 (M30)

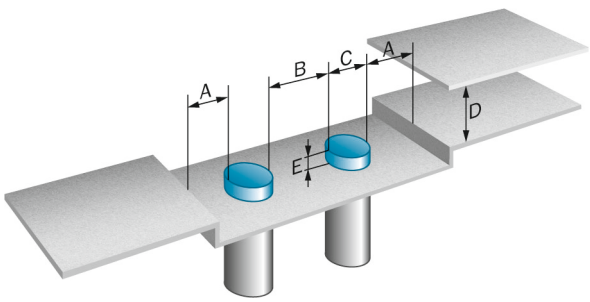

Figure 18: RFH505, RFH510: distances required to prevent mutual interference with parallel mounting of several devices as well as from the environment

Distance	RFH505-1004301	RFH510-1004301
A	18 mm	30 mm