a module solution provider

WG7833BEM2A M.2 Type2226 Module

TI WL1833 IEEE 802.11a/b/g/n solution

BT/BLE Solution

Datasheet

Draft 0.2

Jul/28/2015

Prepared By	Reviewed By	Approved By

Copyright © JORJIN TECHNOLOGIES INC. 2015
http://WWW.JORJIN.COM.TW
CONFIDENTIAL

Index

1. OVERVIEW 3

1.1. GENERAL FEATURES 3

2. FUNCTIONAL FEATURES 4

2.1. MODULE BLOCK DIAGRAM 4

2.2. BLOCK FUNCTIONAL FEATURE 5

2.2.1. WLAN Features 5

2.2.2. Bluetooth Features 5

2.2.3. BLE Features 6

2.2.4. ANT Features 6

3. MODULE OUTLINE 7

3.1. SIGNAL LAYOUT (TOP VIEW) 7

3.2. PIN DESCRIPTION 8

4. MODULE SPECIFICATION 11

4.1. GENERAL MODULE REQUIREMENTS AND OPERATION 11

4.1.1. Absolute Maximum Ratings [1] 11

4.1.2. Recommended Operating Conditions 12

4.1.3. External Slow Clock Input (SLOW_CLK) 13

4.2. WLAN RF PERFORMANCE 14

4.2.1. WLAN 2.4-GHz Receiver Characteristics 14

4.2.2. WLAN 2.4-GHz Transmitter Power 15

4.2.4. WLAN 5-GHz Transmitter Power 17

4.3. BLUETOOTH RF PERFORMANCE 18

4.3.1. BT Receiver Characteristics, In-Band Signals 18

4.3.2. BT Receiver Characteristics – General Blocking 19

4.3.3. BT Receiver Characteristics –BR, EDR Blocking Per Band 19

4.3.5. BT Transmitter, EDR 20

4.3.6. BT Modulation, BR 20

4.3.7. BT Modulation, EDR 21

4.3.8. BT BR, EDR Transceiver - Emissions 21

4.3.9. BT BR Transceiver - Spurs 22

4.3.10. BT EDR Transceiver - Spurs 22

4.4. BT LE RF PERFORMANCE 23

4.4.1. BT LE Receiver Characteristics, In-Band Signals 23

Copyright © JORJIN TECHNOLOGIES INC. 2015
http://WWW.JORJIN.COM.TW
CONFIDENTIAL

4.4.2. BT LE Receiver Characteristics – General Blocking 23
4.4.3. BT LE Transmitter Characteristics 24
4.4.4. BT LE Modulation Characteristics 24
4.4.5. BT LE Transceiver – Emissions 25
4.4.6. BT LE Transceiver - Spurs 25
4.5. ANT PERFORMANCE 25
4.5.1. ANT Receiver Characteristics, In-Band Signals 25
4.5.2. ANT Transmitter Characteristics 25
4.6. POWER CONSUMPTION 26
5. HOST INTERFACE TIMING CHARACTERISTICS 29
5.1. WLAN SDIO TRANSPORT LAYER 29
5.2. SDIO TIMING SPECIFICATIONS 30
5.3. HCI UART SHARED TRANSPORT LAYERS FOR ALL FUNCTIONAL BLOCKS (EXCEPT WLAN) 32
5.4. UART TIMING SPECIFICATIONS 33
5.5. BLUETOOTH CODEC-PCM(AUDIO) TIMING SPECIFICATIONS 34
6. CLOCK AND POWER MANAGEMENT 36
6.1. RESET-POWER-UP SYSTEM 36
6.2. WLAN POWER-UP SEQUENCE 36
6.3. BLUETOOTH/BLE/ANT POWER-UP SEQUENCE 37
7. REFERENCE SCHEMATIC 38
7.1. MODULE REFERENCE DESIGN 38
8. DESIGN RECOMMENDATIONS 39
8.1. DESIGN NOTE ON DEBUG PORT 39
8.2. MODULE LAYOUT RECOMMENDATIONS 39
9. PACKAGE INFORMATION 41
9.1. NGFF TYPE 2226 SPECIFICATION FROM PCI-E M.2_REV1.0 41
9.2. WG7833BEM2A MODULE DRAWING 43
9.3. RF CONNECTOR 43
10. SMT AND BAKING RECOMMENDATION 44
10.1. BAKING RECOMMENDATION 44
10.2. SMT RECOMMENDATION 44
11. HISTORY CHANGE 45

Copyright © JORJIN TECHNOLOGIES INC. 2015

http://WWW.JORJIN.COM.TW
CONFIDENTIAL

1. OVERVIEW

WG7833BEM2A, a WiFi, BT, BLE combo module, is the most demanded design for mobile devices, Audio, Computer, and embedded system applications with Wilink8 solution from TI.

1.1. General Features

- WLAN, Bluetooth, BLE, ANT with Integrated RF Front-End Module (FEM), Power Amplifier (PA), and Power Management on a Single Module
- M.2 Type2226 LGA package
- Dimension 26mm(L) x 22.0mm(W) x 2.6mm(H)
- Provides efficient direct connection to battery by employing several integrated switched mode power supplies (DC2DC).
- Seamless Integration with TI Sitara™ and Other Application Processors
- WLAN and BT/BLE/ANT cores are software and hardware compatible with prior WL127x and WL128x offerings, for smooth migration to device.
- Shared HCI transport for BT/BLE/ANT over UART and SDIO for WLAN.
- Temperature detection and compensation mechanism ensures minimal variation in RF performance over the entire temperature range.
- BT 4.0, BLE, ANT and all audio processing features work in parallel and include full coexistence with WLAN
- Operating temperature: –40°C to 85°C

Copyright © JORJIN TECHNOLOGIES INC. 2015

http://WWW.JORJIN.COM.TW
CONFIDENTIAL

2. FUNCTIONAL FEATURES

2.1. Module Block Diagram

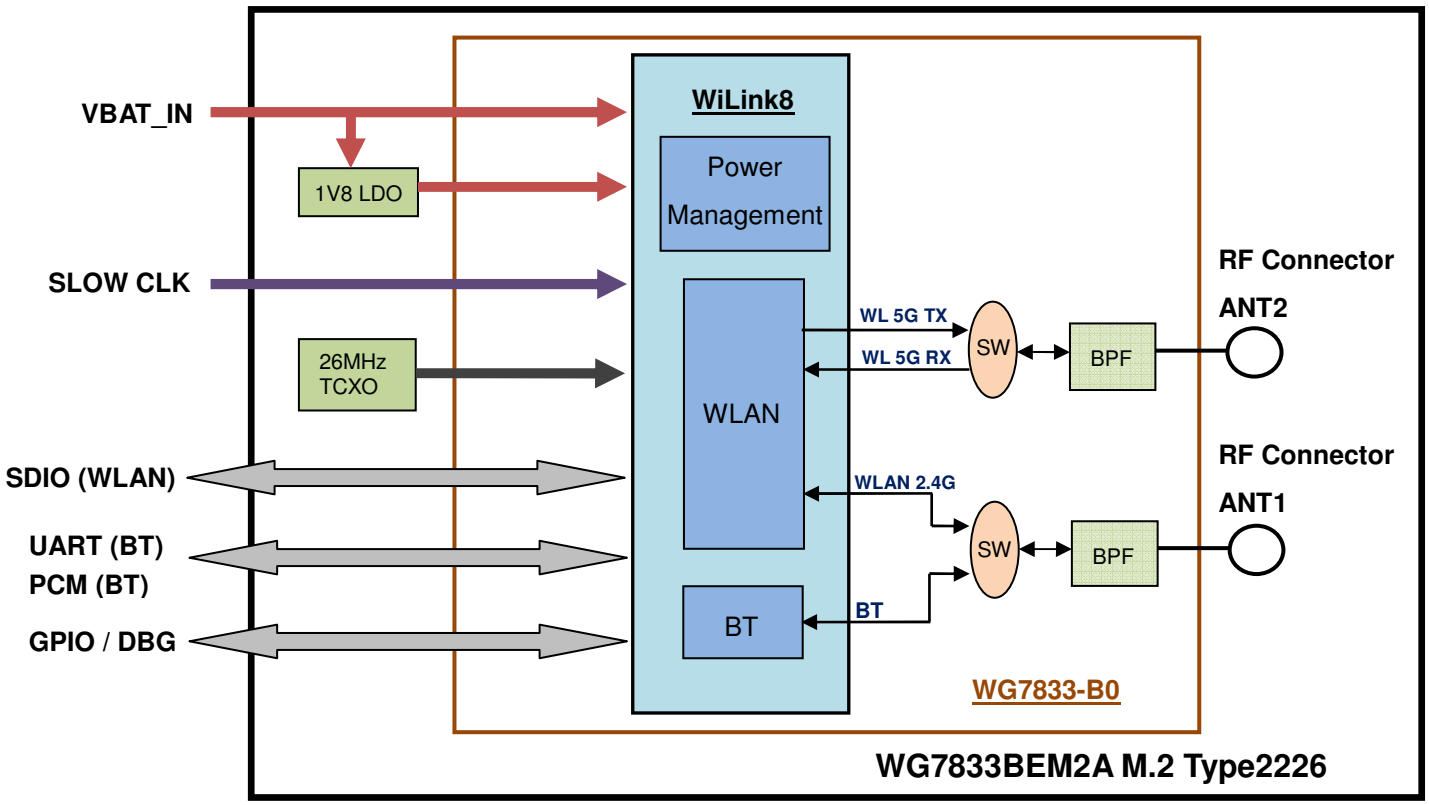

Figure 2-1 WG7833BEM2A Block Diagram

2.2. Block Functional Feature

2.2.1. WLAN Features

- Integrated 2.4 & 5G GHz Power Amplifier (PA) for WLAN solution
- WLAN Baseband Processor and RF transceiver Supporting IEEE Std 802.11a/b/g/n
- WLAN 2.4/5 GHz SISO (20/40 MHz channels)
- Baseband Processor
  - IEEE Std 802.11a/b/g/n data rates and IEEE Std 802.11n data rates with 20 or 40 MHz SISO.
- Fully calibrated system. Production calibration not required.
- Medium Access Controller (MAC)
  - Embedded ARM™ Central Processing Unit (CPU)
  - Hardware-Based Encryption/Decryption using 64-, 128-, and 256-Bit WEP, TKIP or AES Keys,
  - Supports requirements for Wi-Fi Protected Access (WPA and WPA2.0) and IEEE Std 802.11i [includes hardware-accelerated Advanced Encryption Standard (AES)]
  - Designed to work with IEEE Std 802.1x
- IEEE Std 802.11d, e, h, i, k, r PICS compliant.
- New advanced co-existence scheme with BT/BLE/ANT.
- 2.4/5 GHz Radio
  - Internal LNA and PA
  - Supports: IEEE Std 802.11a, 802.11b, 802.11g and 802.11n
- Supports 4 bit SDIO host interface, including high speed (HS) and V3 modes.

2.2.2. Bluetooth Features

- Supports Bluetooth 4.0 as well as CSA2
- Includes concurrent operation and built -in coexisting and prioritization handling of Bluetooth, BLE, ANT, audio processing and WLAN
- Dedicated Audio processor supporting on chip SBC encoding + A2DP:
  - Assisted A2DP (A3DP) support - SBC encoding implemented internally
  - Assisted WB-Speech (AWBS) support - modified SBC codec implemented internally

Copyright © JORJIN TECHNOLOGIES INC. 2015
http://WWW.JORJIN.COM.TW
CONFIDENTIAL

2.2.3. BLE Features

- Fully compliant with BT4.0 BLE dual mode standard
- Support for all roles and role-combinations, mandatory as well as optional
- Supports up to 10 BLE connections
- Independent buffering for LE allows having large number of multiple connections without affecting BR/EDR performance

2.2.4. ANT Features

Fully compliant with all ANT Protocols:

- ANT solution optimized for the fitness and health use-cases
- Simple to complex network topologies
- Supports high-resolution proximity pairing

The ANT protocol has been designed to very power-efficient, yet is flexible enough to support various network topologies (point-to-point, star, 1-to-N, N-to-1) and data transfer modes (broadcast, broadcast with acknowledge, mass data transfer). Each logical ANT channel can be independently configured for 1-way or 2-way operation

Copyright © JORJIN TECHNOLOGIES INC. 2015
http://WWW.JORJIN.COM.TW
CONFIDENTIAL

3. MODULE OUTLINE

3.1. Signal Layout (Top View)

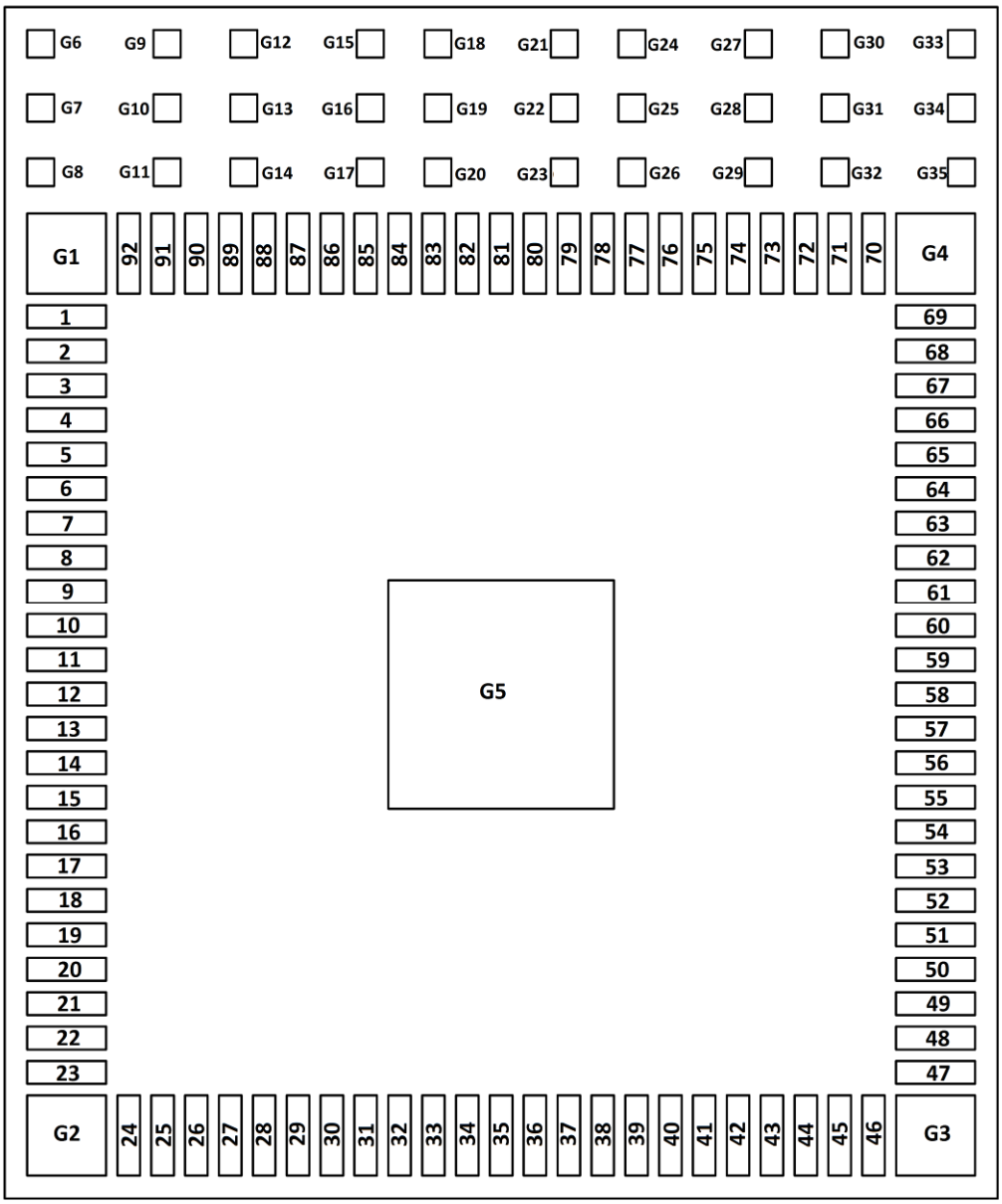

Figure 3-1 Device pins

Copyright © JORJIN TECHNOLOGIES INC. 2015
http://WWW.JORJIN.COM.TW
CONFIDENTIAL

3.2. Pin Description

Table 3-1. Pin Description

Pin No.	Signal Name	Type	Shut Down state	After Power Up(1)	Voltage Level	Description
1	3.3V	POW			VBAT	Power supply input, 2.9 to 4.6 V.
2	3.3V	POW			VBAT	Power supply input, 2.9 to 4.6 V.
3	GND	GND				Ground.
4	RESERVED	-				No connection.
5	ALERT#	-				No connection.
6	I2C_CLK	-				No connection.
7	I2C_DATA	-				No connection.
8	COEX1	-				No connection.
9	COEX2	-				No connection.
10	COEX3	-				No connection.
11	RESERVED	I/O	PD	PD	1.8V	WL_RS232_RX. Reserved for debug only.
12	RESERVED	I/O	PD	PD	1.8V	WL_RS232_TX. Reserved for debug only.
13	RESERVED	-				No connection.
14	GND	GND				Ground.
15	RESERVED	-				No connection.
16	RESERVED	-				No connection.
17	GND	GND				Ground.
18	RESERVED	-				No connection.
19	RESERVED	-				No connection.
20	GND	GND				Ground.
21	RESERVED	-				No connection.
22	RESERVED	-				No connection.
23	GND	GND				Ground.
24	SLOWCLK_32kHz	ANA			3.3V	Input Sleep clock: 32.768 KHz
25	W_DISABLE1#	-				No connection.
26	PEWAKE#	-				No connection.
27	CLKREQ#	-				No connection.
28	PERST#	-				No connection.
29	GND	GND				Ground.
30	REFCLKn0	-				No connection.

Copyright © JORJIN TECHNOLOGIES INC. 2015
http://WWW.JORJIN.COM.TW
CONFIDENTIAL

31	REFCLKp0	-				No connection.
32	GND	GND				Ground.
33	PETn0	-				No connection.
34	PETp0	-				No connection.
35	GND	GND				Ground.
36	PERn0	-				No connection.
37	PERp0	-				No connection.
38	GND	GND				Ground.
39	VENDOR DEFINED	-				No connection.
40	VENDOR DEFINED	-				No connection.
41	VENDOR DEFINED	-				No connection.
42	SDIO RESET#	IN	PD	PD	1.8V	WL_EN, Mode setting: High = enable
43	SDIO WAKE#	OUT	PD	0	1.8V	SDIO available, interrupt out. Active high. (For WL_RS232_TX/RX pull up at power up)
44	SDIO DATA3	IO	HiZ	PU	1.8V	WLAN SDIO Data bit 3. Changes state to PU at WL_EN or BT_EN assertion for card detects. Later disabled by software during initialization. (2)
45	SDIO DATA2	IO	HiZ	HiZ	1.8V	WLAN SDIO Data bit 2 (2)
46	SDIO DATA1	IO	HiZ	HiZ	1.8V	WLAN SDIO Data bit 1 (2)
47	SDIO DATA0	IO	HiZ	HiZ	1.8V	WLAN SDIO Data bit 0(2)
48	SDIO CMD	I/O	HiZ	HiZ	1.8V	WLAN SDIO Command (2)
49	SDIO CLK	IN	HiZ	HiZ	1.8V	WLAN SDIO Clock. Must be driven by the host.
50	UART WAKE#	OUT	PD	PD	3.3V	Bluetooth Host Wake. Open Drain, Active Low. Require pull up on the host side. (recommended 15K to 100K)
51	UART CTS	IN	PU	PU	1.8V	UART CTS from Host.
52	UART TX	OUT	PU	PU	1.8V	UART TX to Host.
53	UART RX	IN	PU	PU	1.8V	UART RX from Host.
54	UART RTS	OUT	PU	PU	1.8V	UART RTS to Host.
55	PCMFR1	OUT	PD	PD	1.8V	Bluetooth PCM/I2S Bus. Frame sync.
56	PCMIN	IN	PD	PD	1.8V	Bluetooth PCM/I2S Bus. Data in.
57	PCMOUT	OUT	PD	PD	1.8V	Bluetooth PCM/I2S Bus. Data out.
58	PCMCLK	OUT	PD	PD	1.8V	Bluetooth PCM/I2S Bus. Clock.
59	GND	GND				Ground.
60	W_DISABLE2#	IN	PD	PD	3.3V	BT_EN, Mode setting: High = enable
61	LED2#	-				No connection.

Copyright © JORJIN TECHNOLOGIES INC. 2015
http://WWW.JORJIN.COM.TW
CONFIDENTIAL

62	LED1#	-				No connection.
63	RESERVED	-				No connection.
64	GND	GND				Ground.
65	USB_D-	-				No connection.
66	USB_D+	-				No connection.
67	GND	GND				Ground.
68	3.3V	POW			VBAT	Power supply input, 2.9 to 4.6 V.
69	3.3V	POW			VBAT	Power supply input, 2.9 to 4.6 V.
70	GND	GND				Ground.
71	GND	GND				Ground.
72	GND	GND				Ground.
73	GND	GND				Ground.
74	GND	GND				Ground.
75	GND	GND				Ground.
76	GND	GND				Ground.
77	GND	GND				Ground.
78	GND	GND				Ground.
79	GND	GND				Ground.
80	GND	GND				Ground.
81	GND	GND				Ground.
82	GND	GND				Ground.
83	GND	GND				Ground.
84	GND	GND				Ground.
85	GND	GND				Ground.
86	GND	GND				Ground.
87	GND	GND				Ground.
88	GND	GND				Ground.
89	GND	GND				Ground.
90	UIM_POWER_SRC/GPIO1	-				No connection.
91	UIM_POWER_SNK	-				No connection.
92	UIM_SWP	-				No connection.
G1~G35	GND	GND				Ground.

(1) PU=pull up; PD=pull down.

(2) Host must provide PU for all non-CLK SDIO signals

Copyright © JORJIN TECHNOLOGIES INC. 2015
http://WWW.JORJIN.COM.TW
CONFIDENTIAL

4. MODULE SPECIFICATION

4.1. General Module Requirements and Operation

4.1.1. Absolute Maximum Ratings (1)

Parameter		Value	Units
VBAT		-0.5 to 4.6	V
Input voltage to Analog pins		-0.5 to 2.1	V
Input voltage to 1.8V digital pins		-0.5 to 2.3	V
Input voltage to 3.3V digital pins		-0.5 to 4.6	V
Operating ambient temperature range		-40 to +85 (2)	°C
Storage temperature range		-55 to +125	°C
ESD Stress Voltage (3)	Human Body Model (4)	>1000	V
	Charged Device Model (5)	>250	V

1) Stresses beyond those listed under “absolute maximum ratings” may cause permanent damage to the device. These are stress ratings only and functional operation of the device at these or any other conditions beyond those indicated under “operating conditions” is not implied. Exposure to absolute-maximum-rated conditions for extended periods may affect device reliability.

2) Operating free-air temperature range. The device can be reliably operated for 7 years at ambient of 85°C, assuming 25% active mode and 75% sleep mode (15,400 cumulative active power-on hours).

3) Electrostatic discharge (ESD) to measure device sensitivity/immunity to damage caused by electrostatic discharges into device.

4) Level listed is the passing level per ANSI/ESDA/JEDEC JS-001. JEDEC document JEP155 states that 500V HBM allows safe manufacturing with a standard ESD control process, and manufacturing with less than 500V HBM is possible if necessary precautions are taken. Pins listed as 1000V may actually have higher performance.

5) Level listed is the passing level per EIA-JEDEC JESD22-C101E. JEDEC document JEP157 states that 250 V CDM allows safe manufacturing with a standard ESD control process, and manufacturing with less than 250V CDM is possible if necessary precautions are taken. Pins listed as 250 V may actually have higher performance.

Copyright © JORJIN TECHNOLOGIES INC. 2015
http://WWW.JORJIN.COM.TW
CONFIDENTIAL

4.1.2. Recommended Operating Conditions

Parameter	Condition	Sym	Min	Max	Units
VBAT (1)	DC supply range for all modes		2.9	4.6	V
IO high-level input voltage	1.8V IO	VIH	1.17	1.8	
IO low-level input voltage	1.8V IO	VIL	0	0.63	
IO high-level input voltage	3.3V IO	VIH	2	3.3	
IO low-level input voltage	3.3V IO	VIL	0	0.8	
Enable inputs high-level input voltage	1.8V IO	VIH_EN	1.365	1.8	
Enable inputs low-level input voltage	1.8V IO	VIL_EN	0	0.4	
IO high-level output voltage	3.3V IO	VOH		3.3	
IO low-level output voltage	3.3V IO	VOL	0	0.2	
High-level output voltage(1.8V IO)	@ 4 mA	VOH	1.35	1.8	
	@ 1 mA		1.688	1.8	
	@ 0.3 mA		1.767	1.8	
Low-level output voltage(1.8V IO)	@ 4 mA	VOL	0	0.45	
	@ 1 mA		0	0.112	
	@ 0.09 mA		0	0.01	
Input transitions time Tr/Tf from 10% to 90% (Digital IO) (2)		Tr/Tf	1	10	ns
Output rise time from 10% to 90% (Digital pins) (2)	CL < 25 pF	Tr		5.3	ns
Output fall time from 10% to 90% (Digital pins) (2)	CL < 25 pF	Tf		4.9	
Ambient operating temperature			-40	85	ºC
Maximum power dissipation	WLAN operation			2.8	W
	BT operation			0.2	

(1) 4.8V is applicable only for 2.3 years (30% of the time). Otherwise, the maximum VBAT should not exceed 4.3V.

(2) Applies to all Digital lines except SDIO, UART, I2C, PCM and slow clock lines

Copyright © JORJIN TECHNOLOGIES INC. 2015
http://WWW.JORJIN.COM.TW
CONFIDENTIAL

4.1.3. External Slow Clock Input (SLOW_CLK)

The supported digital slow clock is 32.768 kHz digital (square wave).

Parameter	Condition	Sym	Min.	Typ.	Max.	Units
Input slow clock Frequency				32.768		KHz
Input slow clock accuracy (Initial + temp + aging)	WLAN, BT				+/-250	ppm
	ANT				+/- 50	
Input Transition time Tr/Tf - 10% to 90%		Tr/Tf			100	ns
Frequency input duty Cycle			15	50	85	%
Input Voltage Limits	Square Wave, DC-coupled	Vih	2		VBAT	Vpeak
		Vil	0		0.8	

Copyright © JORJIN TECHNOLOGIES INC. 2015
http://WWW.JORJIN.COM.TW
CONFIDENTIAL

4.2. WLAN RF Performance

4.2.1. WLAN 2.4-GHz Receiver Characteristics

Parameter	Condition	Min	Typ	Max	Units
Operation frequency range		2412		2484	MHz
Sensitivity	1 Mbps DSSS	–	-95.8	-92.9	dBm
	2 Mbps DSSS	–	-92.7	-90	
20MHz Bandwidth	5.5 Mbps CCK	–	-90.1	-87.4	
At < 10% PER limit	11 Mbps CCK	–	-87.4	-85.2	
	6 Mbps OFDM	–	-91.5	-88.7	
	9 Mbps OFDM	–	-89.9	-87.2	
	12 Mbps OFDM	–	-89	-86.3	
	18 Mbps OFDM	–	-86.7	-84	
	24 Mbps OFDM	–	-83.6	-80.9	
	36 Mbps OFDM	–	-80.2	-77.5	
	48 Mbps OFDM	–	-76	-73.3	
	54 Mbps OFDM	–	-74.4	-71.9	
	MCS0 MM 4K	–	-89.9	-86.9	
	MCS1 MM 4K	–	-87.1	-84.4	
	MCS2 MM 4K	–	-85.4	-82.7	
	MCS3 MM 4K	–	-82.3	-79.6	
	MCS4 MM 4K	–	-78.9	-76.2	
	MCS5 MM 4K	–	-74.7	-72	
	MCS6 MM 4K	–	-73	-70.3	
	MCS7 MM 4K	–	-71.9	-69.2	
	MCS0 MM 4K 40MHz	–	-86.9	-82.2	
	MCS7 MM 4K 40MHz	–	-68.5	-65	
Max Input Level	OFDM(11g/n)	-19	-9		dBm
At < 10% PER limit	CCK	-4	-0		
Adjacent channel rejection	2Mbps DSSS	42.7			
Sensitivity level +3dB for OFDM, Sensitivity	11Mbps CCK	37.9			dBm
level +6dB for 11b	54Mbps OFDM	2.0			
LO Leakage			-80		dBm
PER Floor			1.0	2.0	%

Copyright © JORJIN TECHNOLOGIES INC. 2015
http://WWW.JORJIN.COM.TW
CONFIDENTIAL

4.2.2. WLAN 2.4-GHz Transmitter Power

Parameter	Condition	Min	Typ	Max	
Output Power - Maximum RMS output power measured at 1dB from IEEE spectral mask or EVM	1 Mbps DSSS	14.5	16.5	–	dBm
	2 Mbps DSSS	14.5	16.5	–	
	5.5 Mbps CCK	14.5	16.5	–	
	11 Mbps CCK	14.5	16.5	–	
	6 Mbps OFDM	14.5	16.5	–	
	9 Mbps OFDM	14.5	16.5	–	
	12 Mbps OFDM	14.5	16.5	–	
	18 Mbps OFDM	14.5	16.5	–	
	24 Mbps OFDM	13.5	15.7	–	
	36 Mbps OFDM	12.6	14.8	–	
	48 Mbps OFDM	11.9	14.1	–	
	54 Mbps OFDM	11.3	13.3	–	
	MCS0 MM	13.4	15.6	–	
	MCS1 MM	13.4	15.6	–	
	MCS2 MM	13.4	15.6	–	
	MCS3 MM	13.4	15.6	–	
	MCS4 MM	12.8	14.8	–	
	MCS5 MM	11.9	14.1	–	
	MCS6 MM	11.3	13.3	–	
	MCS7 MM	10.1	12.1	–	
	MCS0 MM 40MHz	11.8	14.3	–	
	MCS7 MM 40MHz	9.7	11.7	–	
Output power accuracy		-1.5		+1.5	dB
Output power resolution			0.125		dB
Operation frequency range		2412		2484	MHz
Return loss			-10		dB
Reference input impedance			50		Ω

Copyright © JORJIN TECHNOLOGIES INC. 2015
http://WWW.JORJIN.COM.TW
CONFIDENTIAL

4.2.3. WLAN 5-GHz Receiver Characteristics

Parameter	Condition	Min	Typ	Max	Units
Operation frequency range		4910		5825	MHz
Sensitivity - 20MHz bandwidth. - At < 10% PER limit	6 Mbps OFDM	–	-92.2	-88.3	dBm
	9 Mbps OFDM	–	-90.4	-86.4	
	12 Mbps OFDM	–	-89.6	-85.6	
	18 Mbps OFDM	–	-87.1	-83.1	
	24 Mbps OFDM	–	-84	-80	
	36 Mbps OFDM	–	-80.6	-76.6	
	48 Mbps OFDM	–	-76.3	-72.3	
	54 Mbps OFDM	–	-74.7	-71.2	
	MCS0 MM 4K	–	-90.5	-86.1	
	MCS1 MM 4K	–	-87.7	-83.7	
	MCS2 MM 4K	–	-85.9	-81.9	
	MCS3 MM 4K	–	-82.8	-78.8	
	MCS4 MM 4K	–	-79.4	-75.4	
	MCS5 MM 4K	–	-75.1	-71.1	
	MCS6 MM 4K	–	-73.5	-69.5	
	MCS7 MM 4K	–	-72.2	-68.6	
	MCS0 MM 4K 40MHz	–	-87.7	-82.5	
	MCS7 MM 4K 40MHz	–	-69	-65.1	
Max Input Level, At < 10% PER limit	OFDM(11a/n)	-27			dBm
Adjacent channel rejection Sensitivity level +3dB for OFDM	54Mbps OFDM	2			dBm
LO Leakage			-53		dBm
PER Floor			1.0	2.0	%

Copyright © JORJIN TECHNOLOGIES INC. 2015
http://WWW.JORJIN.COM.TW
CONFIDENTIAL

4.2.4. WLAN 5-GHz Transmitter Power

Parameter	Condition	Min	Typ	Max	
Output Power - Maximum RMS output power measured at 1dB from IEEE spectral mask or EVM	6 Mbps OFDM	15.4	17.5	–	dBm
	9 Mbps OFDM	15.4	17.5	–	
	12 Mbps OFDM	15.4	17.5	–	
	18 Mbps OFDM	15.4	17.5	–	
	24 Mbps OFDM	14.8	16.4	–	
	36 Mbps OFDM	14.1	15.7	–	
	48 Mbps OFDM	13.3	14.9	–	
	54 Mbps OFDM	12.3	14.1	–	
	MCS0 MM	15.1	17.1	–	
	MCS1 MM	15.1	17.1	–	
	MCS2 MM	15.1	17.1	–	
	MCS3 MM	15.1	17.1	–	
	MCS4 MM	13.9	15.7	–	
	MCS5 MM	13.3	14.9	–	
	MCS6 MM	12.3	14.1	–	
	MCS7 MM	11.4	13.1	–	
	MCS0 MM 40MHz	13.7	16.6	–	
	MCS7 MM 40MHz	10.4	12.3	–	
Output power accuracy		-1.5		+1.5	dB
Output power resolution			0.125		dB
Operation frequency range		4910		5825	MHz
Return loss			-10		dB
Reference input impedance			50		Ω

Copyright © JORJIN TECHNOLOGIES INC. 2015
http://WWW.JORJIN.COM.TW
CONFIDENTIAL

4.3. Bluetooth RF Performance

4.3.1. BT Receiver Characteristics, In-Band Signals

Parameter	Condition		Min	Typ	Max	BT Spec	Units
BT BR, EDR operation frequency range			2402		2480		MHz
BT BR, EDR channel spacing				1			MHz
BT BR, EDR input impedance				50			Ω
BT BR, EDR sensitivity [1] Dirty TX on	BR, BER = 0.1%			-91.7		-70	dBm
	EDR2, BER = 0.01%			-91.2		-70	
	EDR3, BER = 0.01%			-84.2		-70	
BT EDR BER floor at sensitivity + 10 dB, dirty TX off (for 1,600,000 bits)	EDR2		1e-6			1e-5	
	EDR3		1e-6			1e-5	
BT BR, EDR maximum useable input power	BR, BER = 0.1%		-5.0			-20	dBm
	EDR2, BER = 0.1%		-10.0			-20	
	EDR3, BER = 0.1%		-10.0			-20	
BT BR intermodulation	Level of interferers For n = 3, 4, and 5		-36.0	-30.0		-39	dBm
BT BR, EDR C/I performance Numbers show wanted-signal to interfering-signal ratio. Smaller numbers indicate better C/I performances (Image frequency = -1MHz)	BR, Co-channel			8.0		11	dB
	EDR, Co-channel	EDR2		9.5		13	
		EDR3		16.5		21	
	BR, adjacent ±1 MHz			-10.0		0	
	EDR, adjacent ±1 MHz, (image)	EDR2		-10.0		0	
		EDR3		-5.0		5	
	BR, adjacent +2 MHz			-38.0		-30	
	EDR, adjacent +2 MHz,	EDR2		-38.0		-30	
		EDR3		-38.0		-25	
	BR, adjacent -2 MHz			-28.0		-20	
	EDR, adjacent -2 MHz	EDR2		-28.0		-20	
		EDR3		-22.0		-13	

Copyright © JORJIN TECHNOLOGIES INC. 2015
http://WWW.JORJIN.COM.TW
CONFIDENTIAL

	BR, adjacent ≥I±3I MHz			-45.0		-40	
	EDR, adjacent ≥I±3I MHz	EDR2		-45.0		-40	
		EDR3		-44.0		-33	
BT BR, EDR RF return loss				-10.0			dB

(1) Sensitivity degradation up to -3dB may occur due to fast clock harmonics with dirty TX on.

4.3.2. BT Receiver Characteristics – General Blocking

Parameter	Condition	Min	Typ	BT spec	Units
Blocking performance over full range, according to BT specification [(1)]	30-2000 MHz	-6		-10	dBm
	2000-2399 MHz	-6		-27	
	2484-3000 MHz	-6		-27	
	3-12.75 GHz	-6		-10	

1) Exceptions taken out of the total 24 allowed in the BT spec.

4.3.3. BT Receiver Characteristics –BR, EDR Blocking Per Band

Parameter	Band	Min	Typ	Units
Blocking performance for various cellular bands Hopping on. Wanted signal: -3dB from sensitivity, with modulated continuous blocking signal. BER = 0.1% for BT BR, 0.01% for BT EDR. PER = 1%	776-794 MHz (CDMA)		-12	dBm
	824-849 MHz (GMSK) [(1)]		-3	
	824-849 MHz (EDGE) [(1)]		-11	
	824-849 MHz (CDMA, QPSK) [(1)]		-12	
	880-915 MHz (GMSK)		-14	
	880-915 MHz (EDGE)		-15	
	1710-1785 MHz (GMSK)		-4	
	1710-1785 MHz (EDGE)		-18	
	1850-1910 MHz (GMSK)		-18	
	1850-1910 MHz (EDGE)		-20	
	1850-1910 MHz (CDMA, QPSK)		-20	
	1850-1910 MHz (WCDMA, QPSK)		-16	
	1920-1980 MHz (WCDMA, QPSK)		-17	

1) Except for frequencies where [3 * F_BLOCKER] falls within the BT band (2400-2483.5 MHz)

Copyright © JORJIN TECHNOLOGIES INC. 2015
http://WWW.JORJIN.COM.TW
CONFIDENTIAL

4.3.4. BT Transmitter, BR

Parameter		Min	Typ	Max	BT Spec	Units
BR RF output power [1]	VBAT >= 3V		12.2			dBm
	VBAT < 3V		6.7			
BR Gain Control Range			30			dB
BR Power Control Step		2	5	8	2 to 8	
BR Adjacent Channel Power |M-N| = 2 [2]			-43.0		≤ -20	dBm
BR Adjacent Channel Power |M-N| > 2 [2]			-48.0		≤ -40	

1) Values reflect maximum power. Reduced power is available using a vendor-specific (VS) command.

2) Assumes 3dB insertion loss on external filter and traces

4.3.5. BT Transmitter, EDR

Parameter		Min	Typ	Max	BT Spec	Units
EDR output power [1]	VBAT >= 3V		6.7			dBm
	VBAT < 3V		4.7			
EDR relative power		-2		1	-4 to +1	dB
EDR Gain Control Range			30			dB
EDR Power Control Step		2	5	8	2 to 8	dB
EDR Adjacent Channel Power |M-N| = 1 [2]			-36		≤ -26	dBc
EDR Adjacent Channel Power |M-N| = 2 [2]			-30		≤ -20	dBm
EDR Adjacent Channel Power |M-N| > 2 [2]			-42		≤ -40	

1) Values reflect maximum power. Reduced power is available using a vendor-specific (VS) command.

2) Assumes 3dB insertion loss on external filter and traces.

4.3.6. BT Modulation, BR

Parameter	Condition[1]		Performances			BT spec	Units
			Min	Typ	Max		
BR -20dB Bandwidth				925	995	≤1000	kHz
BR modulation characteristics	Δf1avg	Mod data = 4-ones, 4-zeros: 111100001111...		160		140 to 175	kHz
	Δf2max ≥ limit for at least 99.9% of all Δf2max	Mod data = 1010101...		130		> 115	kHz
	Δf2avg / Δf1avg			88		> 80	%
BR carrier frequency	One slot packet		-25		+25	< ±25	kHz

Copyright © JORJIN TECHNOLOGIES INC. 2015
http://WWW.JORJIN.COM.TW
CONFIDENTIAL

drift	Three and five slot packet	-35		35	< ±40	kHz
BR drift rate	lfk+5 – fkl , k = 0 …. max			15	< 20	kHz/ 50µs
BR initial carrier frequency tolerance (2)	f0 – fTX	-25		25	< ±75	kHz

1) Performance figures at maximum power

2) This number is added on top of the reference clock frequency accuracy

4.3.7. BT Modulation, EDR

Parameter (1)	Condition	Min	Typ.	Max	BT spec	Units
EDR Carrier frequency stability		-5		5	≤10	kHz
EDR Initial Carrier Frequency Tolerance (2)		-25		25	±75	kHz
EDR RMS DEVM	EDR2		4		20	%
	EDR3		4		13	%
EDR 99% DEVM	EDR2			30	30	%
	EDR3			20	20	%
EDR Peak DEVM	EDR2		9		35	%
	EDR3		9		25	%

1) Performance figures at maximum power

2) This number is added on top of the reference clock frequency accuracy

4.3.8. BT BR, EDR Transceiver - Emissions

Parameter (1)	Condition (2)		Performances			Units
			Min	Typ	Max	
BT out-of-band emission	746-768 MHz (CDMA)	BR, EDR		-151		dBm/Hz
	869-894 MHz (WCDMA, GSM)			-149		dBm/Hz
	925-960 MHz (E-GSM)			-148		dBm/Hz
	1570-1580 MHz (GPS)			-145		dBm/Hz
	1598-1607 MHz (GLONASS) (3)			-145		dBm/Hz
	1805-1880 MHz (DCS, WCDMA)			-141		dBm/Hz
	1930-1990 MHz (PCS)			-139		dBm/Hz
	2110-2170 MHz (WCDMA)	BR		-134		dBm/Hz
		EDR		-129		dBm/Hz
BT harmonics	2nd harmonic			1.5		dBm

Copyright © JORJIN TECHNOLOGIES INC. 2015
http://WWW.JORJIN.COM.TW
CONFIDENTIAL

	3rd harmonic		-4		dBm
	4th harmonic		-10		dBm

1) Meets FCC and ETSI requirements with suitable external filter

2) Performance figures at maximum power

3) Except for frequencies that corresponds to 2*RF_FREQ/3

4.3.9. BT BR Transceiver - Spurs

Parameter [1]	Condition [2]		Performances			Units
			Min	Typ	Max	
BT out-of-band spurs	76-108 MHz (FM)	BR		-77		dBm
	746-768 MHz (WCDMA)			-79		dBm
	869-894 MHz (WCDMA, GSM)			-77		dBm
	925-960 MHz (E-GSM)			-77		dBm
	1570-1580 MHz (GPS)			-72		dBm
	1598-1607 MHz (GLONASS) (3)			-74		dBm
	1805-1880 MHz (DCS, WCDMA)			-72		dBm
	1930-1990 MHz (PCS)			-70		dBm
	2110-2170 MHz (WCDMA)			-59		dBm

1) Meets FCC and ETSI requirements with suitable external filter

2) Performance figures at maximum power

3) Except for frequencies that corresponds to 2*RF_FREQ/3

4.3.10. BT EDR Transceiver - Spurs

Parameter	Condition [1]		Performances			Units
			Min	Typ	Max	
BT out-of-band spurs	76-108 MHz (FM)	EDR		-82		dBm
	746-768 MHz (WCDMA)			-87		dBm
	869-894 MHz (WCDMA, GSM)			-85		dBm
	925-960 MHz (E-GSM)			-84		dBm
	1570-1580 MHz (GPS)			-79		dBm
	1598-1607 MHz (GLONASS) [2]			-78		dBm
	1805-1880 MHz (DCS, WCDMA)			-76		dBm
	1930-1990 MHz (PCS)			-74		dBm
	2110-2170 MHz (WCDMA)			-63		dBm

1) Performance figures at maximum power

2) Except for frequencies that corresponds to 2*RF_FREQ/3

Copyright © JORJIN TECHNOLOGIES INC. 2015
http://WWW.JORJIN.COM.TW
CONFIDENTIAL

4.4. BT LE RF Performance

4.4.1. BT LE Receiver Characteristics, In-Band Signals

Parameter	Condition [2]	Min	Typ	Max	BLE spec	Units
BT LE Operation frequency range		2402		2480		MHz
BT LE Channel spacing			2			MHz
BT LE Input impedance			50			Ω
BT LE Sensitivity [1], Dirty Tx on			-92.8		≤ -70	dBm
BT LE Maximum useable input power		-5			≥ -10	dBm
BT LE Intermodulation characteristics	Level of interferers. For n = 3, 4, 5	-36	-30		≥ -50	dBm
BT LE C/I performance Note: Numbers show wanted signal-to-interfering signal ratio. Smaller numbers indicate better C/I performance. Image = -1MHz	LE, co-channel		8	12	≤ 21	dB
	LE, adjacent ±1MHz		-5	0	≤ 15	
	LE, adjacent +2MHz		-45	-38	≤ -17	
	LE, adjacent –2MHz		-22	-15	≤ -15	
	LE, adjacent ≥ |±3|MHz		-47	-40	≤ -27	

1) Sensitivity degradation up to -3dB may occur due to fast clock harmonics.

2) BER of 0.1% corresponds to PER of 30.8% for a minimum of 1500 transmitted packets, according to BT LE test spec

4.4.2. BT LE Receiver Characteristics – General Blocking

Parameter	Condition	Min	Typ	Max	BLE spec	Unit
BT LE Blocking performance over full range, according to LE specification [1]	30–2000MHz	-15			≥ –30	dBm
	2000–2399MHz	-15			≥ –35	
	2484–3000MHz	-15			≥ –35	
	3–12.75GHz	-15			≥ –30	

1) Exceptions taken out of the total 10 allowed for fbf_1, according to the BT LE Spec

Copyright © JORJIN TECHNOLOGIES INC. 2015
http://WWW.JORJIN.COM.TW
CONFIDENTIAL

4.4.3. BT LE Transmitter Characteristics

Parameter		Min	Typ	Max	BT LE Spec	Unit
BT LE RF output power (1)	Vbat >= 3V		12.2		≤10	dBm
	Vbat < 3V		6.7		≤10	dBm
BT LE Adjacent Channel Power |M-N| = 2 (2)			-51.0		≤ –20	dBm
BT LE Adjacent Channel Power |M-N| > 2 (2)			-54.0		≤ –30	

1) To reduce the maximum BLE power, use a VS command. The optional extra margin is offered to compensate for design losses, such as trace and filter losses, and to achieve the maximum allowed output power at system level.

2) Assumes 3dB insertion loss on external filter and traces

4.4.4. BT LE Modulation Characteristics

Parameter	Condition (1)		Performances			BT Spec	Units
			Min	Typ	Max		
BT LE modulation characteristics	Δf1avg	Mod data = 4-ones, 4-zeros: 111100001111...		250		225 to 275	kHz
	Δf2max ≥ limit for at least 99.9% of all Δf2max	Mod data = 1010101...		215		≥185	kHz
	Δf2avg / Δf1avg			90		≥80	%
BT LE carrier frequency drift	lf0 – fnl , n = 2,3 …. K		-25		25	≤±50	kHz
BT LE drift rate	lf1 – f0l and lfn – fn-5l ,n = 6,7…. K				15	≤20	kHz/ 50µs
LE initial carrier frequency tolerance (2)	fn – fTX		-25		25	≤±100	kHz

1) Performance figures at maximum power

2) This number is added on top of the reference clock frequency accuracy

Copyright © JORJIN TECHNOLOGIES INC. 2015
http://WWW.JORJIN.COM.TW
CONFIDENTIAL

4.4.5. BT LE Transceiver – Emissions

See Section 4.3.8, BT BR, EDR Transceiver – Emissions.

4.4.6. BT LE Transceiver - Spurs

See Section 4.3.9, BT BR Transceiver – Spurs.

4.5. ANT Performance

4.5.1. ANT Receiver Characteristics, In-Band Signals

Parameter	Condition	Min	Typ	Max	Units
ANT Operation frequency range		2402		2480	MHz
ANT Channel spacing			1		MHz
ANT Sensitivity	12.72% PER (1)		-84.7		dBm

1) Translation from BER=0.1%, assuming packet is 136 bits (not including preamble)

4.5.2. ANT Transmitter Characteristics

Same as Bluetooth BR Transmitter Characteristics

Copyright © JORJIN TECHNOLOGIES INC. 2015
http://WWW.JORJIN.COM.TW
CONFIDENTIAL

4.6. POWER CONSUMPTION

4.6.1. Shutdown and Sleep Currents

Parameter	Power Supply Current	Typ	Unit
Shutdown mode (All functions shut down)	V_{BAT}	11	uA
WLAN sleep mode	V_{BAT}	155	
BT sleep mode	V_{BAT}	111	

4.6.2. WLAN Power Currents

Parameter	Conditions	Typ (avg) - 25C	Units
LPM	2.4GHz RX LPM	48	mA
Receiver	2.4GHz RX search SISO20	53	mA
	2.4GHz RX search SISO40	58	mA
	5GHz RX search SISO20	59	mA
	5GHz RX search SISO40	63	mA
	2.4GHz RX 20M SISO 11CCK	55	mA
	2.4GHz RX 20M SISO 6OFDM	60	mA
	2.4GHz RX 20M SISO MCS7	64	mA
	2.4GHz RX 40MHz MCS7	76	mA
	5GHz RX 20MHz 6OFDM	67	mA
	5GHz RX 20MHz MCS7	72	mA
	5GHz RX 40MHz MCS7	84	mA
Transmitter	2.4GHz TX 20M SISO 6OFDM 16.4dBm	290	mA
	2.4GHz TX 20M SISO 11CCK 16.5dBm	278	mA
	2.4GHz TX 20M SISO 54OFDM 13.1dBm	252	mA
	2.4GHz TX 20M SISO MCS7 12.2dBm	243	mA
	2.4GHz TX 40M SISO MCS7 11.8dBm	248	mA
	5GHz TX 20M SISO 6OFDM 16.8dBm	371	mA
	5GHz TX 20M SISO 54OFDM 13.4dBm	334	mA
	5GHz TX 20M SISO MCS7 12.7dBm	329	mA
	5GHz TX 40M SISO MCS7 11.9dBm	337	mA

Copyright © JORJIN TECHNOLOGIES INC. 2015
http://WWW.JORJIN.COM.TW
CONFIDENTIAL

4.6.3. Bluetooth Currents

Current measurements are done at the following output power: BR at 12.5dBm, EDR at 7dBm.

Use Case [1]	Typ	Units
BR Voice HV3 + sniff	11.6	mA
EDR Voice 2-EV3 no retrans. + sniff	5.9	mA
Sniff 1 attempt 1.28s	178	uA
EDR A2DP EDR2 (master). SBC high quality – 345Kbs	10.4	mA
EDR A2DP EDR2 (master). MP3 high quality – 192Kbs	7.5	mA
Full throughput ACL RX: RX-2DH5 [2] [3]	18	mA
Full throughput BR ACL TX: TX-DH5 [3]	50	mA
Full throughput EDR ACL TX: TX-2DH5 [3]	33	mA
Page or inquiry 1.28s/11.25ms	253	uA
P&I Scan (P=1.28/I=2.56)	332	uA

1) BT role in all scenarios is Slave, except for A2DP

2) ACL RX has same current in all modulations

3) Full throughput assumed data transfer in one direction

4.6.4. Bluetooth LE Currents

All current measurements are done at output power of 8dBm

Use Case	Typ	Units
Advertising, non-connectable [1]	131	uA
Advertising, discoverable [1]	143	uA
Scanning [2]	266	uA
Connected, master role, 1.28sec conn. Interval [3]	124	uA
Connected, slave role, 1.28sec conn. Interval [3]	132	uA

1) Advertising in all 3 channels, 1.28sec advertising interval, 15 Bytes advertise data.

2) Listening to a single frequency per window, 1.28sec scan interval, 11.25msec scan window.

3) Zero Slave connection latency Empty Tx/Rx LL packets.

Copyright © JORJIN TECHNOLOGIES INC. 2015
http://WWW.JORJIN.COM.TW
CONFIDENTIAL

4.6.5. ANT Currents

Use Case	Conditions	Typ	Units
ANT Rx message mode	250ms interval	360	uA
ANT Rx message mode	500ms interval	220	uA
ANT Rx message mode	1000ms interval	150	uA

Copyright © JORJIN TECHNOLOGIES INC. 2015
http://WWW.JORJIN.COM.TW
CONFIDENTIAL

5. HOST INTERFACE TIMING CHARACTERISTICS

The following table summarizes the Host Controller interface options. All interfaces operate independently.

WLAN	Shared HCI for all functional blocks except WLAN	BT Voice/Audio
WLAN HS SDIO	Over UART	BT PCM

The device incorporates UART module dedicated to the BT shared-transport Host Controller Interface (HCI) transport layer. The HCI interface is used to transport commands, events and ACL between the Bluetooth device and its host using HCI data packets. This acts as a shared transport for all functional blocks except WLAN.

5.1. WLAN SDIO Transport Layer

The SDIO is the host interface for WLAN. The interface between the host and the WG7835-T0 uses an SDIO interface and supports a maximum clock rate of 50MHz.

The Device SDIO also supports the following features of the SDIO V3 specification:

- 4 bit data bus
- Synchronous and Asynchronous In-Band-Interrupt
- Default and High-Speed (50MHz) timing
- Sleep/wake commands

Copyright © JORJIN TECHNOLOGIES INC. 2015
http://WWW.JORJIN.COM.TW
CONFIDENTIAL

5.2. SDIO Timing Specifications

5.2.1. SDIO Switching Characteristics – Default Rate

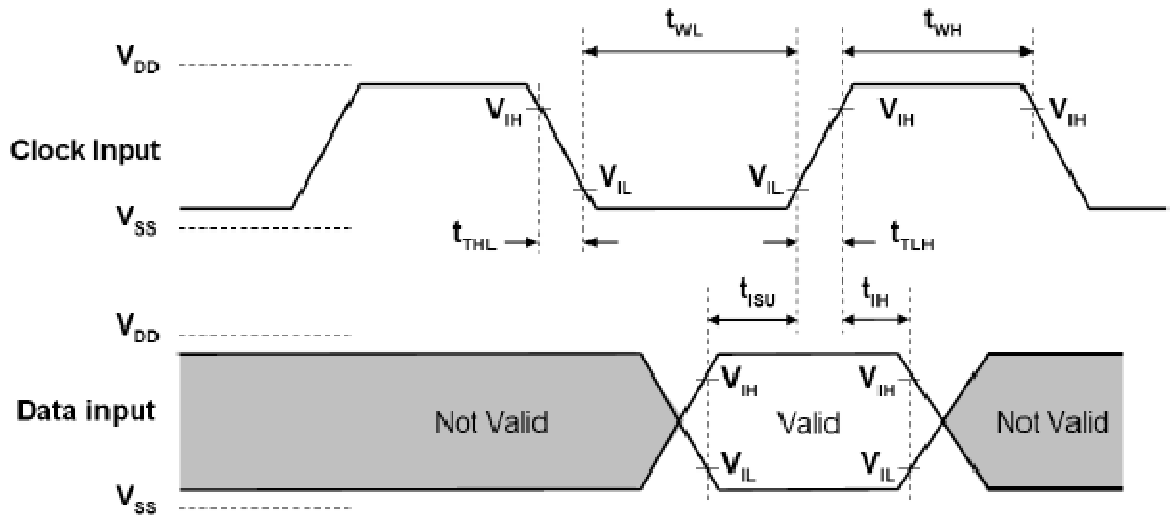

Figure 5-1 SDIO default input timing

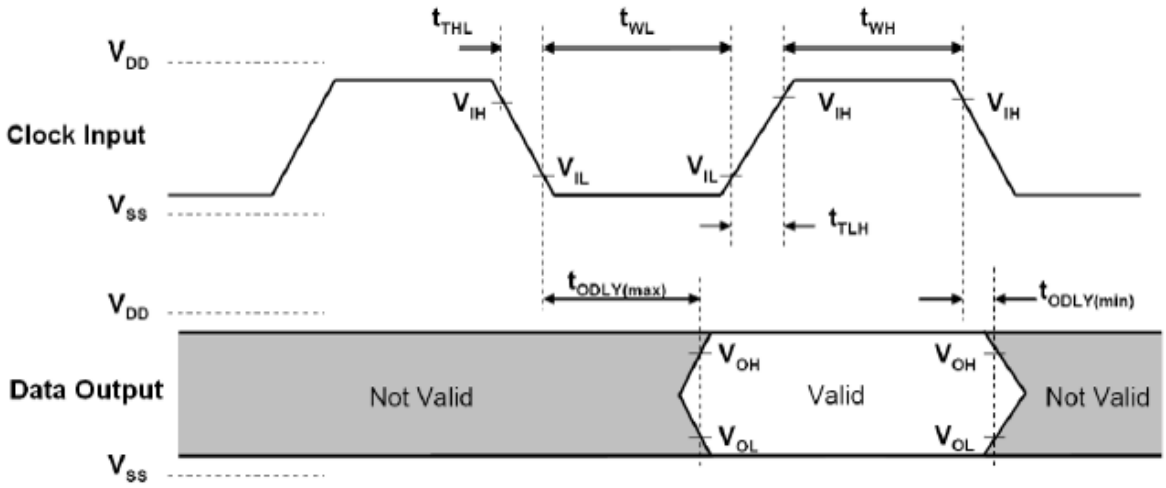

Figure 5-2 SDIO default output timing

Table 5-1 SDIO Default Timing Characteristics[1]

PARAMETER[2]		MIN	MAX	UNIT
Fclock	Clock frequency, CLK	0	26	MHz
DC	Low/high duty cycle	40	60	%
tTLH	Rise time, CLK		10	ns
tTHL	Fall time, CLK		10	ns

Copyright © JORJIN TECHNOLOGIES INC. 2015
http://WWW.JORJIN.COM.TW
CONFIDENTIAL

tISU	Setup time, input valid before CLK↑	3		ns
tIH	Hold time, input valid after CLK↑	2		ns
tODLY	Delay time, CLK↓ to output valid	2.5	14.8	ns
CI	Capacitive load on outputs		15	pF

(1) To change the data out clock edge from the falling edge (default) to the rising edge, set the configuration bit.

(2) Parameter values reflect maximum clock frequency.

5.2.2. SDIO Switching Characteristics – High Rate

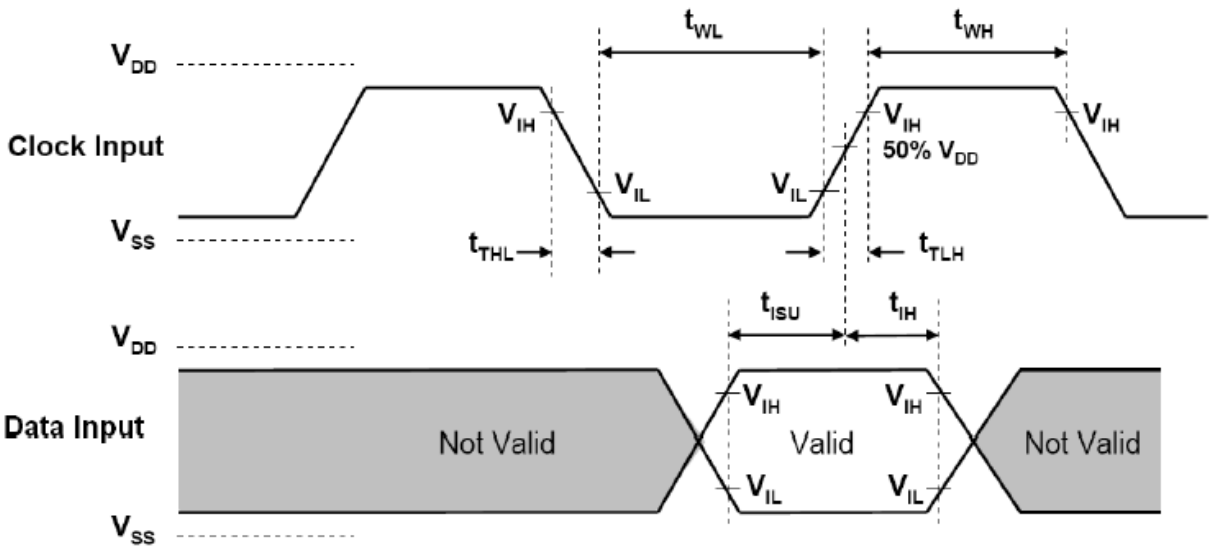

Figure 5-3. SDIO HS input timing

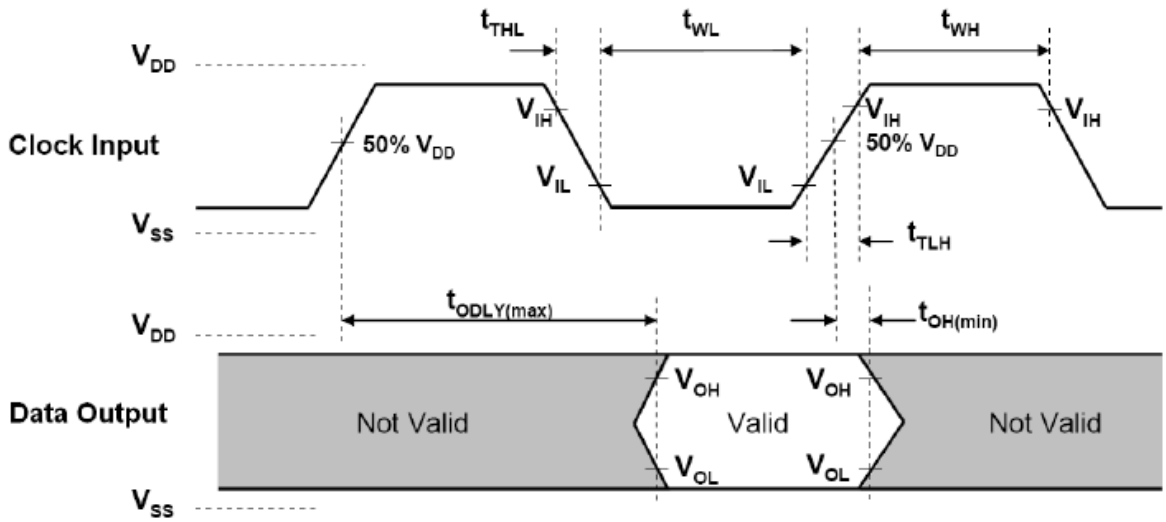

Figure 5-4 SDIO HS output timing

Copyright © JORJIN TECHNOLOGIES INC. 2015
http://WWW.JORJIN.COM.TW
CONFIDENTIAL

Table 5-2 SDIO HS Timing Characteristics

PARAMETER		MIN	MAX	UNIT
Fclock	Clock frequency, CLK	0	50	MHz
DC	Low/high duty cycle	40	60	%
tTLH	Rise time, CLK		3	ns
tTHL	Fall time, CLK		3	ns
tISU	Setup time, input valid before CLK↑	3		ns
tIH	Hold time, input valid after CLK↑	2		ns
tODLY	Delay time, CLK↓ to output valid	2.5	14	ns
CI	Capacitive load on outputs		10	pF

5.3. HCI UART Shared Transport Layers for All Functional Blocks (Except WLAN)

The HCI UART supports most baud rates (including all PC rates) for all fast clock frequencies - up to a maximum of 4 Mbps. After power up the baud rate is set for 115.2 kbps, regardless of fast clock frequency. The baud rate can then be changed by using a VS command. The Device responds with a Command Complete Event (still at 115.2 kbps), after which the baud rate change occurs.

HCI hardware includes the following features:

- Receiver detection of break, idle, framing, FIFO overflow and parity error conditions.
- Receiver Transmitter underflow detection.
- CTS/RTS hardware flow control.
- 4 wires (H4)

The below table lists the UART default settings

Table 5-3 UART Default Setting

Parameter	Value
Bit Rate	115.2 kbps
Data Length	8 bits
Stop Bit	1
Parity	None

Copyright © JORJIN TECHNOLOGIES INC. 2015
http://WWW.JORJIN.COM.TW
CONFIDENTIAL

5.3.1. UART 4-Wires Interface – H4

The interface includes four signals: TXD, RXD, CTS and RTS. Flow control between the host and the Device is byte-wise by hardware. (See Figure 5-5)

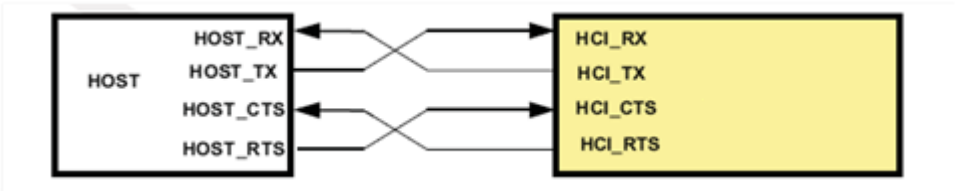

Figure 5-5 HCI UART Connection

When the UART RX buffer of the device passes the flow-control threshold, the buffer sets the UART_RTS signal high to stop transmission from the host. When the UART_CTS signal is set high, the device stops transmitting on the interface. If HCI_CTS is set high in the middle of transmitting a byte, the device finishes transmitting the byte and stops the transmission.

5.4. UART Timing Specifications

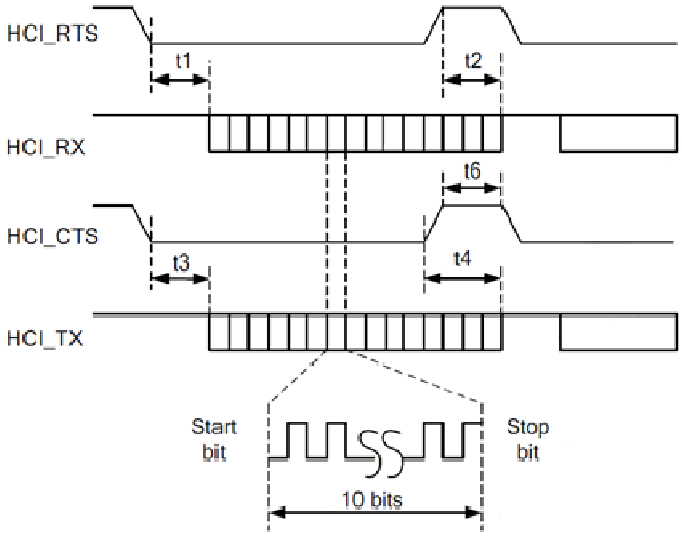

Figure 5-6 UART Timing Diagram

Table 5-4 UART Timing Characteristics

Characteristic	Condition	Symbol	Min	Typ	Max	Unit
Baud rate			37.5		4364	Kbps
Baud rate accuracy per byte	RX/TX		-2.5		+1.5	%
Baud rate accuracy per bit	RX/TX		-12.5		+12.5	%
CTS low to TX_DATA on		t3	0	2		us

Copyright © JORJIN TECHNOLOGIES INC. 2015
http://WWW.JORJIN.COM.TW
CONFIDENTIAL

CTS low to TX_DATA off	Hardware flow control	t4			1	Byte
CTS High Pulse Width		t6	1			bit
RTS low to RX_DATA on		t1	0	2		us
RTS high to RX_DATA off	Interrupt set to 1/4 FIFO	t2			16	Bytes

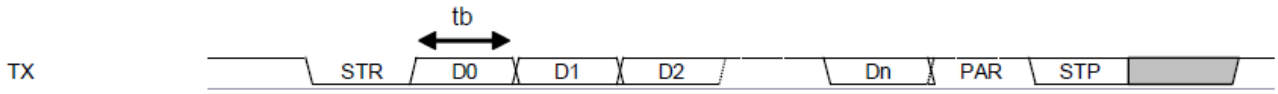

STR-Start bit; D0..Dn - Data bits (LSB first); PAR - Parity bit (if used); STP - Stop bit

Figure 5-7 UART Data Frame

5.5. Bluetooth Codec-PCM(Audio) Timing Specifications

Figure 5-8 shows the Bluetooth codec-PCM (audio) timing diagram.

Table 5-5 lists the Bluetooth codec-PCM master timing characteristics.

Table 5-6 lists the Bluetooth codec-PCM slave timing characteristics.

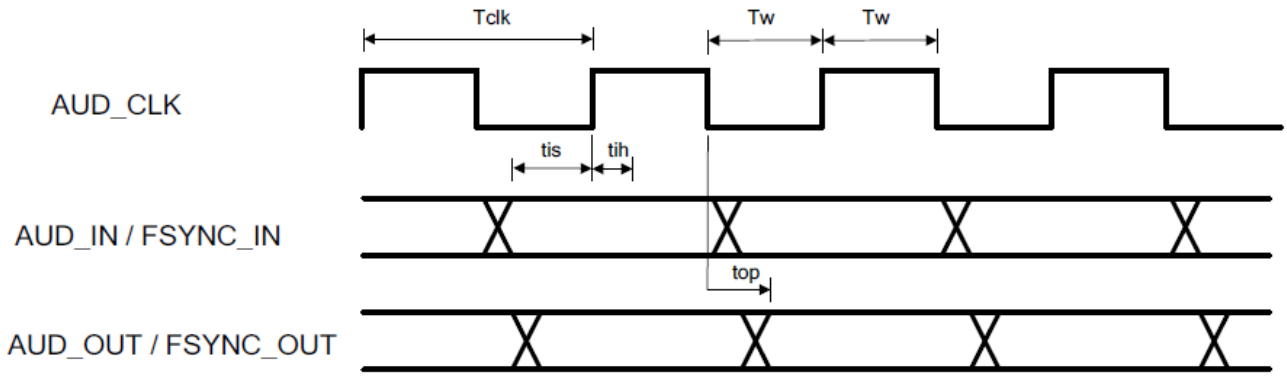

Figure 5-8. PCM Interface Timing

Table 5-5 Bluetooth Codec-PCM Master Timing Characteristics

Parameter	Symbol	Min	Max	Unit
Cycle time	Tclk	166.67 (6.144MHz)	15625 (64 kHz)	ns
High or low pulse width	Tw	35% of Tclk min		
AUD_IN setup time	tis	10.6		
AUD_IN hold time	tih	0		
AUD_OUT propagation time	top	0	15	
AUD_FSYNC_OUT propagation time	top	0	15	
Capacitive loading on outputs	Cl		40	pF

Copyright © JORJIN TECHNOLOGIES INC. 2015
http://WWW.JORJIN.COM.TW
CONFIDENTIAL

Table 5-6 Bluetooth Codec-PCM Slave Timing Characteristics

Parameter	Symbol	Min	Max	Unit
Cycle time	Tclk	81 (12.288MHz)		ns
High or low pulse width	Tw	35% of Tclk min		
AUD_IN setup time	tis	5		
AUD_IN hold time	tih	0		
AUD_OUT propagation time	top	5		
AUD_FSYNC_OUT propagation time	top	0	19	
Capacitive loading on outputs	Cl		40	pF

Copyright © JORJIN TECHNOLOGIES INC. 2015
http://WWW.JORJIN.COM.TW
CONFIDENTIAL

6. CLOCK AND POWER MANAGEMENT

The slow clock is a free-running, 32.768 kHz clock supplied from an external clock source. The clock is connected to the RTC_CLK pin and is a digital square-wave signal in the range of 0 to 3.3V nominal

6.1. Reset-Power-Up System

After VBAT is fed to the device and while BT_EN and WL_EN are deasserted (low), the device is in SHUTDOWN state, during which functional blocks, internal DC-DCs, and LDOs are disabled. The power supplied to the functional blocks is cut off. When one of the signals (BT_EN or WL_EN) are asserted (high), a power-on reset (POR) is performed. Stable slow clock and VBAT are prerequisites for a successful POR.

6.2. WLAN Power-Up Sequence

Figure 6-1 shows the WLAN power-up sequence.

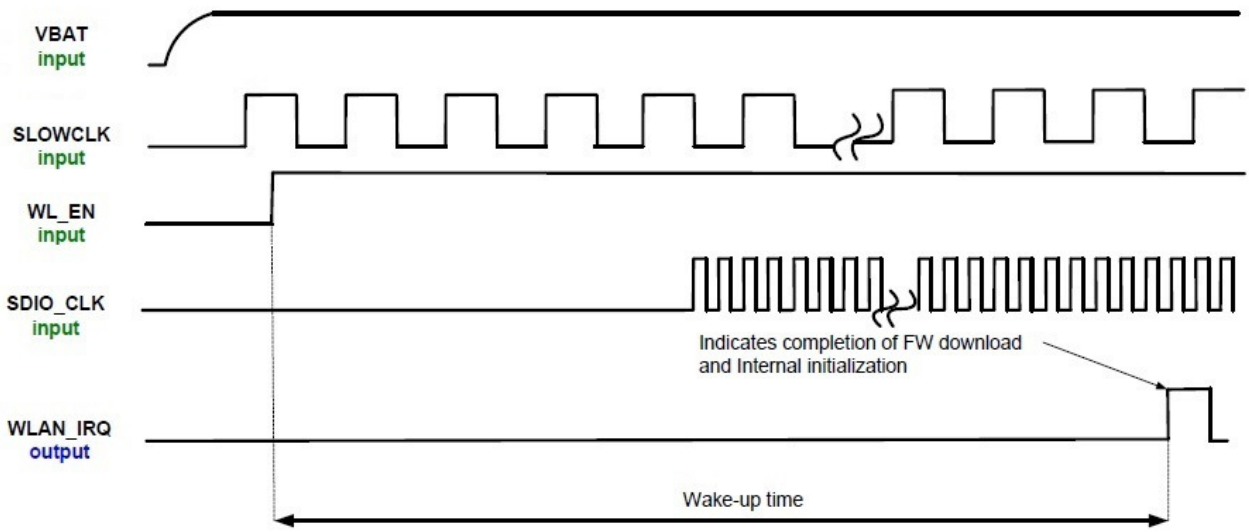

Figure 6-1 WLAN Power-Up Sequence

Copyright © JORJIN TECHNOLOGIES INC. 2015
http://WWW.JORJIN.COM.TW
CONFIDENTIAL

6.3. Bluetooth/BLE/ANT Power-Up Sequence

Figure 6-2 shows the Bluetooth/BLE/ANT power-up sequence.

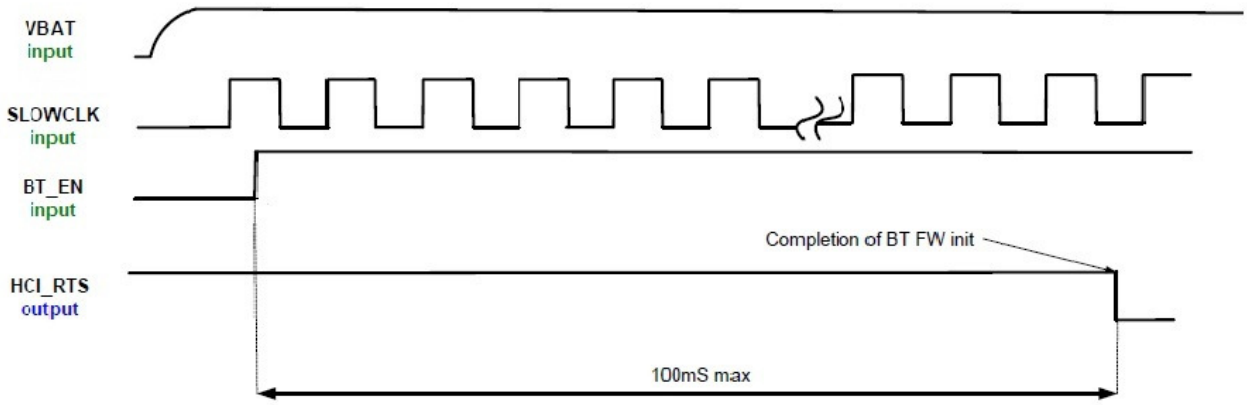

Figure 6-2 Bluetooth/BLE/ANT power-up sequence

Copyright © JORJIN TECHNOLOGIES INC. 2015
http://WWW.JORJIN.COM.TW
CONFIDENTIAL

7. REFERENCE SCHEMATIC

7.1. Module Reference Design

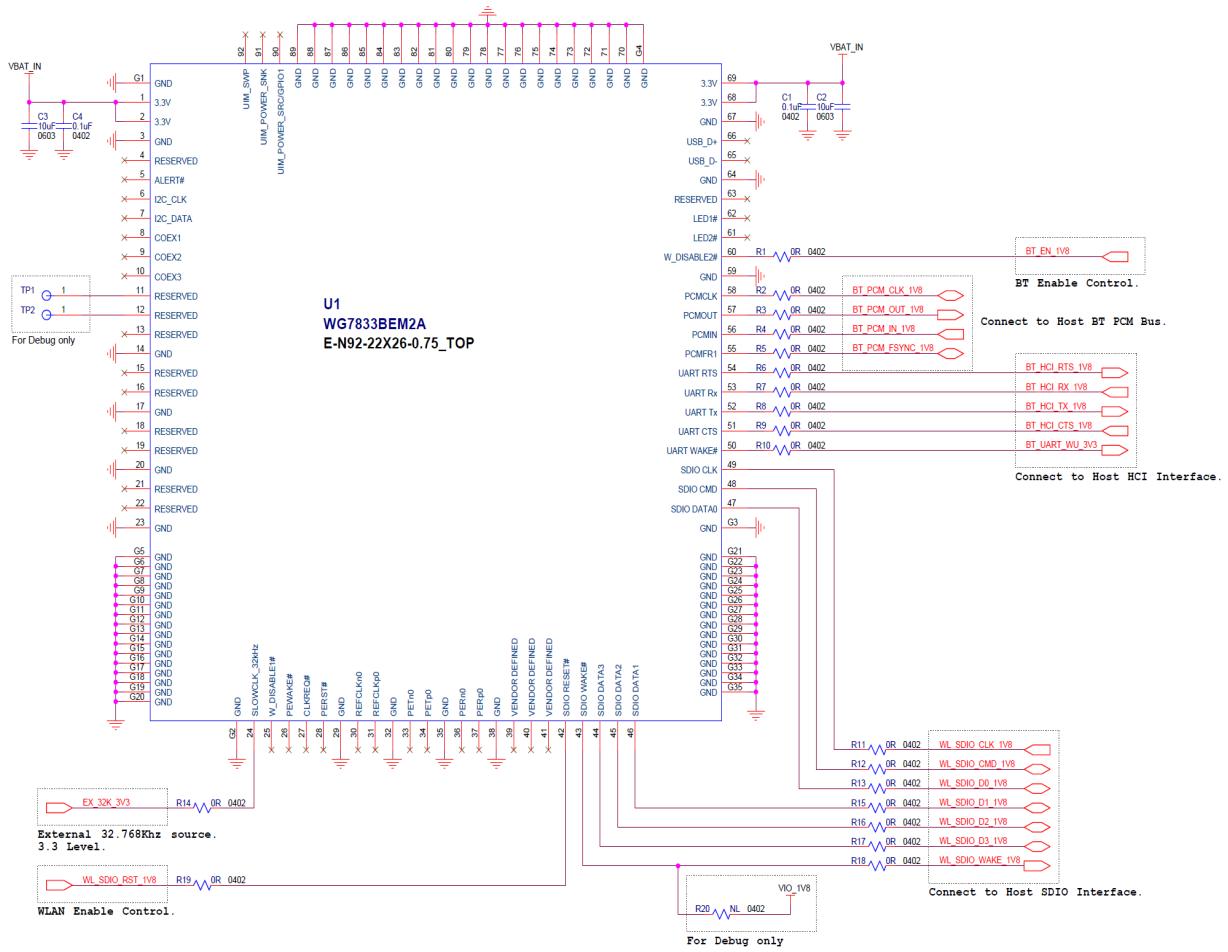

Figure 7-1 Module Reference Schematic

8. DESIGN RECOMMENDATIONS

8.1. Design Note on Debug Port

- Pin# 11, 12 serve as WLAN and BT debug port, respectively. So test points for these two signals should be reserved for debugging purpose.
- Pin# 43 (SDIO WAKE#) needs to be pulled high via 10Kohm and use Pin# 11, 12 as hardware interface to communicate with system platform and TI RTTT test utility for WLAN RF performance test, debug and manufacturing application.

8.2. Module Layout Recommendations

Follow these module layout recommendations:

- Digital Signals Layout
  - SDIO signals traces (CMD, D0, D1, D2 and D3) should be routed in parallel to each other and as short as possible. **(Less than 12cm) Besides, every trace length must be the same as the others.**
  - Enough space above 1.5 time trace width or ground shielding between trace and trace will be benefit to make sure signal quality, especially for SDIO_CLK trace. Remember to keep them away from the other digital or analog signal traces. Adding ground shielding around these bus is recommended.
  - Route trace of SDIO_CLK at Top layer without vias.
  - SDIO Clock, Audio Clock (PCM_AUD_CLK), these digital clock signals are a source of noise. <u>Keep the traces of these signals as short as possible. Whenever possible, maintain a clearance around them.</u>
  - BT_AUD signals should be rounted in the same group and it's better to rout them at the same layer or confirm them referring to the same reference plane.

- Power Trace
  - Power trace for VBAT should be 20mil wide, at least.
  - Isolate different power traces with Ground plane

- Ground
  - Having a complete Ground and more GND vias under module in layer1 for system stable and thermal dissipation.
  - Have a complete Ground pour in layer 2 for thermal dissipation.

Copyright © JORJIN TECHNOLOGIES INC. 2015
http://WWW.JORJIN.COM.TW
CONFIDENTIAL

- Increase the GND pour in the 1st layer, move all the traces from the 1st layer to the inner layers if possible.
- Move GND vias close to the pad.

- Clocks
  - It is preferable to keep all clocks between the ground/power layers.

Copyright © JORJIN TECHNOLOGIES INC. 2015
http://WWW.JORJIN.COM.TW
CONFIDENTIAL

9. PACKAGE INFORMATION

9.1. NGFF Type 2226 Specification from PCI-e M.2_Rev1.0

※ **Only Ant1 and Ant2 on this module.**

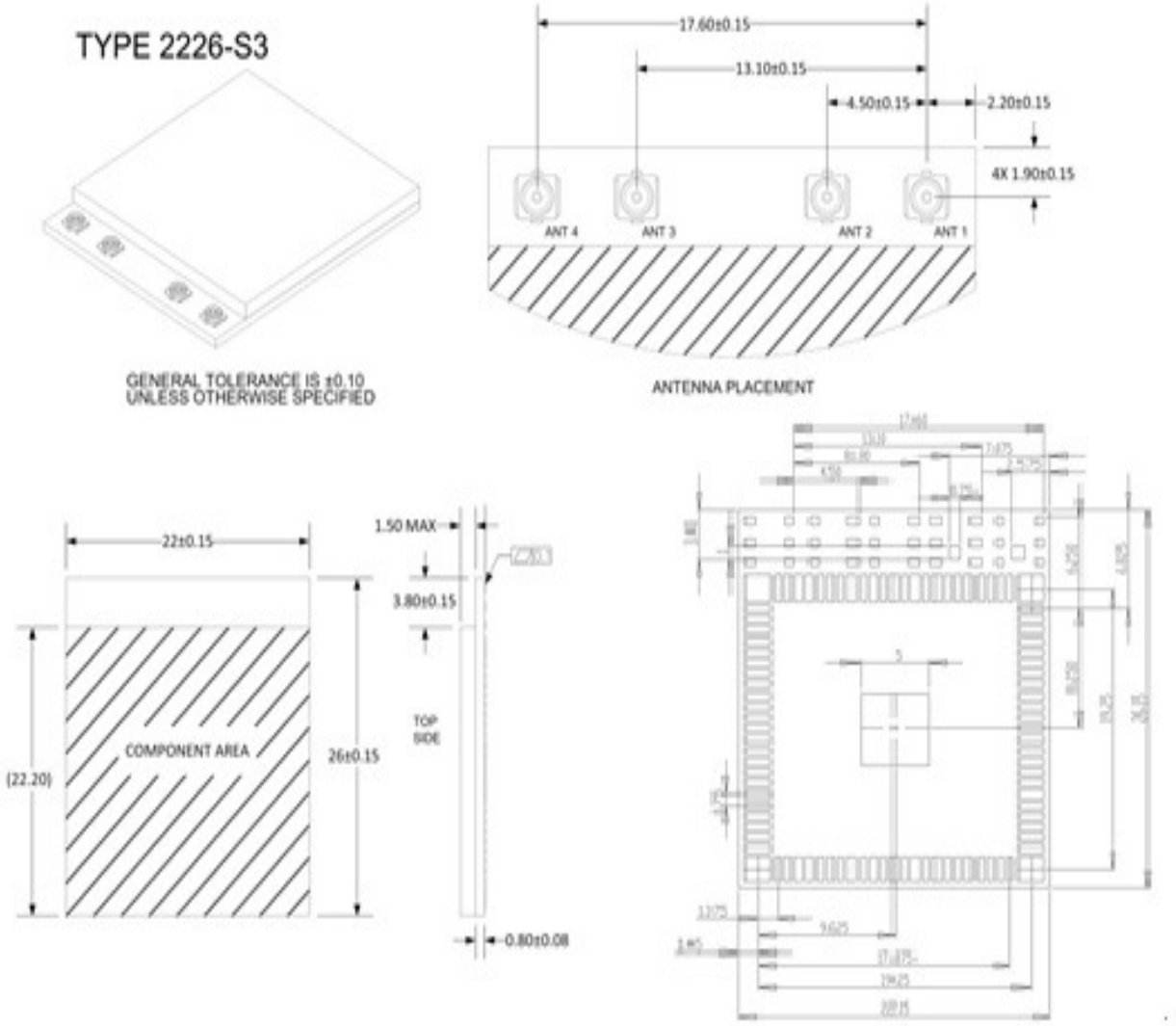

Figure 9-1 M.2 Type 2226-S3 Mechanical Outline Drawing

Copyright © JORJIN TECHNOLOGIES INC. 2015
http://WWW.JORJIN.COM.TW
CONFIDENTIAL

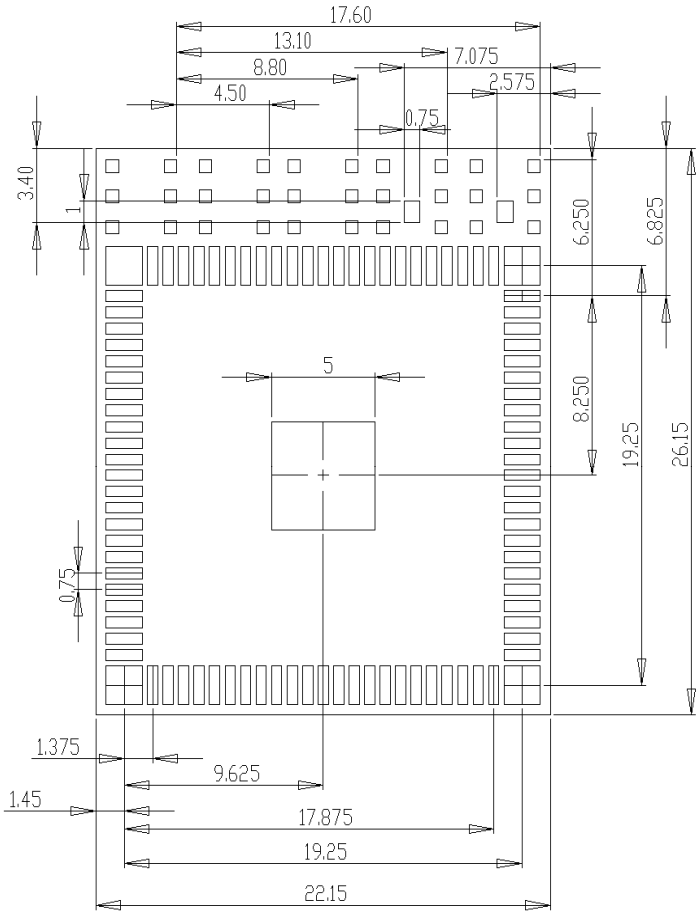

Figure 9-2 Recommended Land Pattern for Module Type 2226

Copyright © JORJIN TECHNOLOGIES INC. 2015
http://WWW.JORJIN.COM.TW
CONFIDENTIAL

9.2. WG7833BEM2A Module Drawing

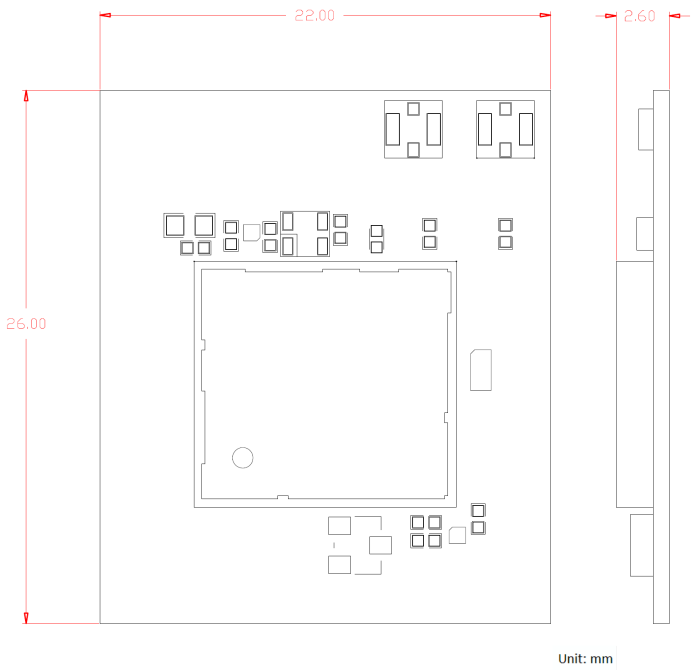

Figure 9-3 Module drawing

9.3. RF Connector

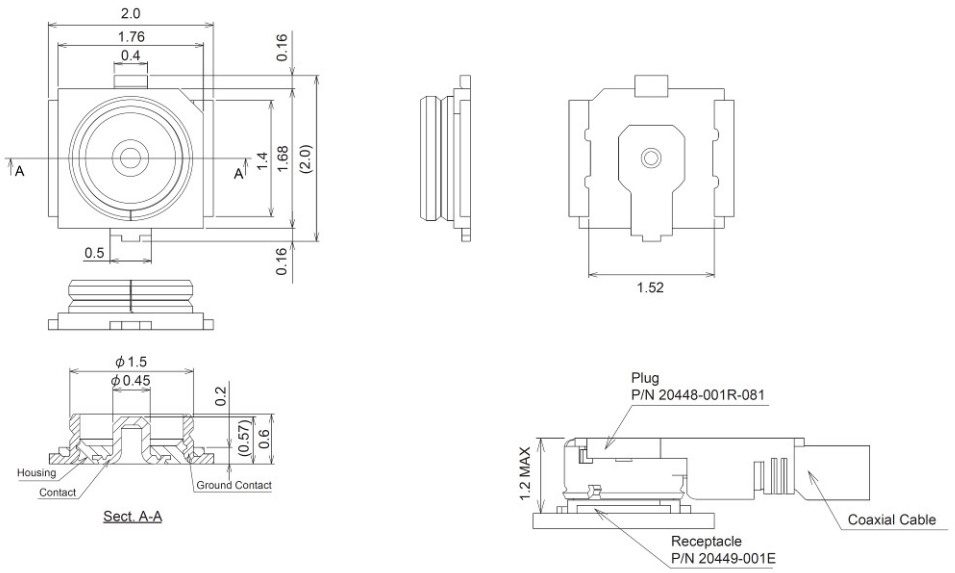

※ P/N : 20449-001E (MHF4 series) from I-PEX

Figure 9-4 RF Connect drawing

10. SMT AND BAKING RECOMMENDATION

10.1. Baking Recommendation

- Baking condition：
  - Follow MSL Level 4 to do baking process.
  - After bag is opened, devices that will be subjected to reflow solder or other high temperature process must be
    a) Mounted within 72 hours of factory conditions <30°C/60% RH, or
    b) Stored at <10% RH.
  - Devices require bake, before mounting, if Humidity Indicator Card reads >10%

If baking is required, Devices may be baked for 8 hrs. at 125 °C.

10.2. SMT Recommendation

- Recommended Reflow profile：

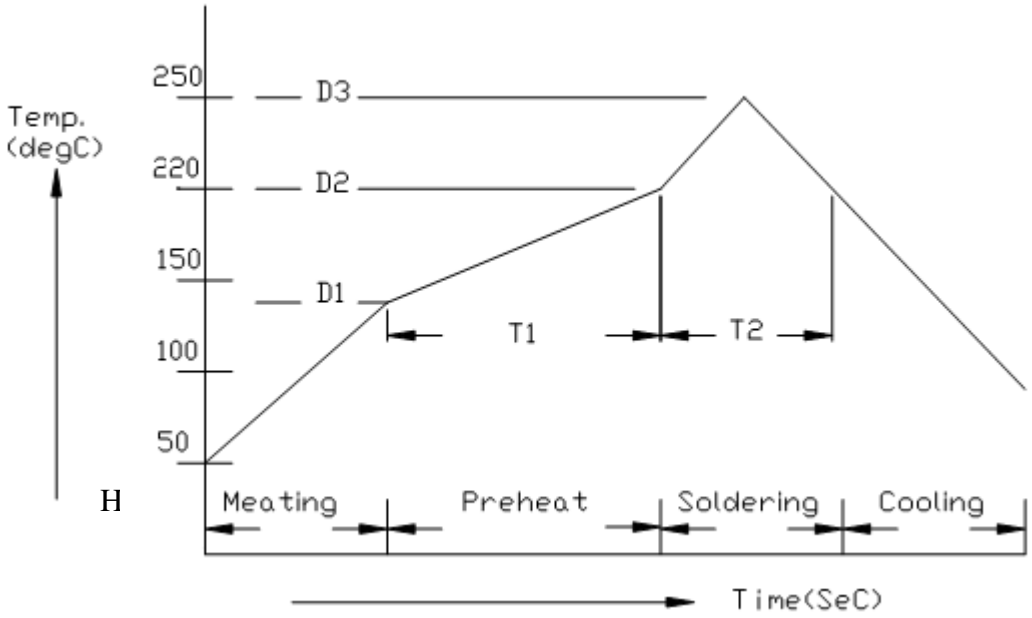

No.	Item	Temperature	Heating Time
1	Pre-heat	D1 = 140 °C	T1: 80 ~ 120 sec
2	Soldering	D2 = 220 °C	T2: 60 +/- 10 sec
3	Peak-Temp.	D3 = 250 °C max	

Copyright © JORJIN TECHNOLOGIES INC. 2015
http://WWW.JORJIN.COM.TW
CONFIDENTIAL

Note: (1) Reflow soldering is recommended two times maximum.
(2) Add Nitrogen while Reflow process： SMT solder ability will be better.

- **Stencil thickness：** 0.1~ 0.13 mm (Recommended)
- **Soldering paste (without Pb)：** Recommended SENJU N705-GRN3360-K2-V can get better soldering effects.

11. HISTORY CHANGE

Revision	Date	Description
D 0.1	2015 / 02 / 26	New Released
D 0.2	2015 / 07 / 28	Add FCC/NCC WARING STATEMENT

Copyright © JORJIN TECHNOLOGIES INC. 2015
http://WWW.JORJIN.COM.TW
CONFIDENTIAL

FCC WARING STATEMENT

This equipment has been tested and found to comply with the limits for a Class B digital device, pursuant to part 15 of the FCC rules. These limits are designed to provide reasonable protection against harmful interference in a residential installation. This equipment generates, uses and can radiate radio frequency energy and, if not installed and used in accordance with the instructions, may cause harmful interference to radio communications. However, there is no guarantee that interference will not occur in a particular installation. If this equipment does cause harmful interference to radio or television reception, which can be determined by turning the equipment off and on, the user is encouraged to try to correct the interference by one or more of the following measures:

-Reorient or relocate the receiving antenna.

-Increase the separation between the equipment and receiver.

-Connect the equipment into an outlet on a circuit different from that to which the receiver is connected.

-Consult the dealer or an experienced radio/TV technician for help.

You are cautioned that changes or modifications not expressly approved by the party responsible for compliance could void your authority to operate the equipment.

This device complies with Part 15 of the FCC Rules. Operation is subject to the following two conditions: (1) this device may not cause harmful interference and (2) this device must accept any interference received, including interference that may cause undesired operation.

FCC RF Radiation Exposure Statement:

1. This Transmitter must not be co-located or operating in conjunction with any other antenna or transmitter.

2. This equipment complies with FCC RF radiation exposure limits set forth for an uncontrolled environment. This equipment should be installed and operated with a minimum distance of 20 centimeters between the radiator and your body.

According to FCC 15.407(e), the device is intended to operate in the frequency band of 5.15GHz to 5.25GHz under all conditions of normal operation. Normal operation of this device is restricted to indoor used only to reduce any potential for harmful interference to co-channel MSS operations.

Information to OEM integrator

The OEM integrator has to be aware not to provide information to the end user regarding how to

Copyright © JORJIN TECHNOLOGIES INC. 2015
http://WWW.JORJIN.COM.TW
CONFIDENTIAL

install or remove this RF module in the user manual of the end product. The user manual which is provided by OEM integrators for end users must include the following information in a prominent location.

1. To comply with FCC RF exposure compliance requirements, the antenna used for this transmitter must be installed to provide a separation distance of at least 20 cm from all persons and must not be co- located or operating in conjunction with any other antenna or transmitter, except in accordance with FCC multi-transmitter product transmitter product procedures.
2. Only those antennas with same type and lesser gain filed under this FCC ID number can be used with this device.
3. The regulatory label on the final system must include the statement: “Contains FCC ID: WS2-WG7833B0 “.
4. The final system integrator must ensure there is no instruction provided in the user manual or customer documentation indicating how to install or remove the transmitter module except such device has implemented two-ways authentication between module and the host system.
5. If the end product integrating this module is going to be operated in 5.15 ~5.25GHz frequency range, the warning statement in the user manual of the end product should include the restriction of operating this device in indoor could void the user’s authority to operate the equipment.

Copyright © JORJIN TECHNOLOGIES INC. 2015
http://WWW.JORJIN.COM.TW
CONFIDENTIAL

NCC WARING STATEMENT

Article 12

Without permission, any company, firm or user shall not alter the frequency, increase the power, or change the characteristics and functions of the original design of the certified lower power frequency electric machinery.

Article 14

The application of low power frequency electric machineries shall not affect the navigation safety nor interfere a legal communication, if an interference is found, the service will be suspended until improvement is made and the interference no longer exists.

Copyright © JORJIN TECHNOLOGIES INC. 2015
http://WWW.JORJIN.COM.TW
CONFIDENTIAL